GOVERNMENT OF ANDHRA PRADESH
A B S T R A C T

Municipal Administration and Urban Development Department – Andhra Pradesh Building Rules, 2012 – Orders – Issued.

MUNICIPAL ADMINISTRATION AND URBAN DEVELOPMENT (M) DEPARTMENT

G.O.Ms.No.168 **Dated: 07.04.2012**

Read the following:

1. G.O.Ms.No.483 M.A & U.D. Department, dated 24-08-1998
2. G.O.Ms.No.541 M.A & U.D. Department, dated 17-11-2000
3. G.O.Ms.No.33 M.A & U.D. Department, dated 03-03-2001
4. G.O.Ms.No.86 M.A & U.D. Department, dated 03-03-2006
5. G.O.Ms.No.171 M.A & U.D. Department, dated 19-04-2006
6. G.O.Ms.No.623 M.A & U.D. Department, dated 01-12-2006
7. G.O.Ms.No.17 M.A & U.D. Department, dated 10-01-2007
8. G.O.Ms.No.678 M.A & U.D. Department, dated 07-09-2007
9. G.O.Ms.No.736 M.A & U.D. Department, dated 03-10-2007
10. G.O.Ms.No.744 M.A & U.D. Department, dated 04-10-2007
11. G.O.Ms.No.279 M.A & U.D. Department, dated 01-04-2008
12. G.O.Ms.No.281 M.A & U.D. Department, dated 01-04-2008
13. G.O.Ms.No.302 M.A & U.D. Department, dated 15-04-2008
14. G.O.Ms.No.569 M.A & U.D. Department, dated 23-08-2008
15. G.O.Ms.No.249 M.A & U.D. Department, dated 16-03-2009
16. G.O.Ms.No.450 M.A & U.D. Department, dated 13-10-2010
17. G.O.Ms.No.34 M.A & U.D. Department, dated 22-01-2011
18. G.O.Ms.No.45 M.A & U.D. Department, dated 28-01-2011
19. G.O.Ms.No.82 M.A & U.D. Department, dated 21-02-2011

-- o0o --

O R D E R:

1. In the references read above, Government have issued Comprehensive Building Rules and other related rules which are applicable to Municipal Corporations, Municipalities, Nagar Panchayats and areas covered by Urban Development Authorities in the State. These Building Rules are regulating the building activities in above areas.
2. Government consider that there is a need to bring comprehensive and uniform building stipulations in the State and therefore decided to issue Andhra Pradesh Buildings Rules.
3. A copy of this Order is available on the Internet and can be accessed at the address http://goir.ap.gov.in/.
4. The following notification shall be published in an Extraordinary issue of Andhra Pradesh Gazettee dated:09-04-2012.

(BY ORDER AND IN THE NAME OF THE GOVERNOR OF ANDHRA PRADESH)

B. SAM BOB
PRINCIPAL SECRETARY TO GOVERNMENT

To
The Commissioner, Printing, Stationery & Stores Purchase Department, Hyderabad
for Publication of the Notification in the Gazettee and furnish 1000 copies.
The Director of Municipal Administration, Hyderabad A.P, Hyderabad,
The Director of Town & Country Planning, A.P. Hyderabad,
The Commissioner, Greater Hyderabad Municipal Corporation, Hyderabad,
The Metropolitan Commissioner,
Hyderabad Metropolitan Development Authority, Hyderabad,
All Vice Chairmen of Urban Development Authorities,

P.T.O.

All Municipal Commissioners in the State through Director of Municipal Administration, Hyderabad A.P, Hyderabad,
The Chairman & Managing Director, APTRANSCO, AP, Hyderabad,
The Commissioner & Inspector General of Registration & Stamps, A.P Hyderabad.
The Managing Director, Hyderabad Metro Water Supply & Sewerage, Hyderabad.
Copy to:
The Law (A) Department, (2 copies)
The Revenue (R&S) Department,
The Energy Department.
SF/SC

//FORWARDED BY ORDER//

SECTION OFFICER

NOTIFICATION

In exercise of the powers conferred by **Section 585 read with 592 of the Greater Hyderabad Municipal Corporation Act, 1955; Proviso under sub section (1) read with sub section (2) of Section 14, 32, 46 and 58 of the Andhra Pradesh Urban Areas (Development) Act, 1975; Section 56 (1) of Hyderabad Metropolitan Development Authority (HMDA) Act, 2008; Section 18 of the Andhra Pradesh Municipal Corporations Act, 1994; Section 326 of the Andhra Pradesh Municipalities Act, 1965 and Section 44 (1) of the Andhra Pradesh Town Planning Act,1920 and in supersession of all the existing rules on the subject,** the Government of Andhra Pradesh hereby issue the following rules applicable to all Urban Development Authority areas and Urban Local Bodies together with Gram Panchayat areas in the State covered in Master Plans / General Town Planning Schemes / Outline Development Plans.

RULES

1. SHORT TITLE, APPLICABILITY & COMMENCEMENT:

(a) These Rules may be called **'The Andhra Pradesh Building Rules - 2012'.**

(b) They shall apply to the building activities in the areas falling in;

(i) Hyderabad Metropolitan Development Authority (HMDA),

(ii) All Urban Development Authorities,

(iii) All Municipal Corporations,

(iv) All Municipalities,

(v) All Nagar Panchayats,

(vi) Gram Panchayat areas covered in Master Plans/General Town Planning Schemes notified under Andhra Pradesh Town Planning Act,1920 and

(vii) Industrial Area Local Authority (IALA) / Special Economic Zone (SEZ) notified by Government.

(c) These rules shall apply to all building activity. All existing rules, regulations, byelaws orders that are in conflict or inconsistent with these Rules shall stand modified to the extent of the provisions of these rules.

(d) They shall come in to force from the date of publication in the Andhra Pradesh Gazettee.

2. **DEFINITIONS: In these rules**,

(a) **'Competent Authority'** means:

(i) The Metropolitan Commissioner, Hyderabad Metropolitan Development Authority in HMDA area exclusive of Greater Hyderabad Municipal Corporation (GHMC) Area,

(ii) The Commissioner, Greater Hyderabad Municipal Corporation (GHMC)

(iii) The Vice Chairman of the respective Urban Development Authority.

(iv) The Director of Town & Country Planning in case of Municipal Corporations, Municipalities, Nagara Panchayats not covered in Urban Development Authorities and Gram Panchayat areas covered in Master Plans / General Town Planning Schemes notified under Andhra Pradesh Town Planning Act, 1920.

(b) **'Enforcement Authority'** means:

(i) The Metropolitan Commissioner, Hyderabad Metropolitan Development Authority.

(ii) The Vice Chairman of the respective Urban Development Authority.

(iii) The Commissioner of respective Urban Local Body.

(iv) The Executive Authority of the Gram Panchayat.

(v) The Executive Authority of the Special Unit created as the case may be for the purpose of sanctioning and monitoring building and development activity, as applicable.

(c) **'Group Development Scheme'** is reckoned as development of Residential Buildings in a Campus or Site of 4000sq.m and above in area and could be row houses, semi-detached, detached Houses, Apartment blocks or High-Rise buildings or mix or combination of the above.

(d) **'Group Housing'** means the development of building having 5 or more multiple dwelling units and common services on a given site or plot in a single or multiple blocks without customary subdivision of land by way of individual plots.

(e) **'Height of Building'** means height measured from the abutting road and in case of undulated terrain height can be considered as average of the corresponding ground level. The parapet wall, staircase head room, lift room, water tank are excluded from the height of the building.

(f) **'High-Rise Building'** means a building with 18m or more in height. However, chimneys, cooling towers, boiler rooms, lift machine rooms, cold storage and other non-working areas in case of industrial buildings and water tanks and architectural features in respect of other buildings are excluded.

(g) **'Parking Complex/Parking Lot'** means premises either built or open which is utilized purely for parking of vehicles permitted in specific areas.

(h) '**Sanctioning Authority'** means:

(i) The Metropolitan Commissioner, Hyderabad Metropolitan Development Authority.

(ii) The Vice Chairman of the respective Urban Development Authority.

(iii) The Commissioner of respective Urban Local Body.

(iv) The Executive Authority of the Gram Panchayat.

(v) The Executive Authority of the Special Unit created as the case may be for the purpose of sanctioning and monitoring building and development activity, as applicable.

(i) **'Transferable Development Right (TDR)'** means an award specifying the built up area an owner of a site or plot can sell or dispose or utilize elsewhere, in lieu of surrendering land free of cost which is required to be set apart or affected for public purpose as per the Master Plan or in road widening or covered in recreational use zone, etc. The award is in the form of a TDR Certificate issued by the Competent Authority.

Terms and expressions which are not defined in these Rules shall have the same meaning as in the respective rules / regulations / bye-laws of the respective local authorities and as defined in the National

Building Code as the case may be, unless the context otherwise requires.

3. RESTRICTION OF BUILDING ACTIVITY IN THE VICINITY OF CERTAIN AREAS:

(a) **Water Bodies**

(i) No building / development activity shall be allowed in the bed of water bodies like river or nala and in the Full Tank Level (FTL) of any lake, pond, cheruvu or kunta / shikam lands.

Unless and otherwise stated, the area and the Full Tank Level (FTL) of a Lake / Kunta shall be reckoned as measured and as certified by the Irrigation Department and Revenue Department.

(ii) The above water bodies and courses shall be maintained as Recreational/Green Buffer Zone and no building activity shall be carried out within:

(1) 100m from the boundary of the River outside the Municipal Corporation / Municipality / Nagara Panchayat limits and 50m with in the Municipal Corporation / Municipality / Nagara Panchayat limits. The boundary of the river shall be as fixed and certified by the Irrigation Department and Revenue Department.

(2) 30m from the FTL boundary of Lakes / Tanks / Kuntas of area 10Ha and above.

(3) 9m from the FTL boundary of Lakes / Tanks / Kuntas of area less than 10Ha / shikam lands;

(4) 9m from the defined boundary of Canal, Vagu, Nala, Storm Water Drain of width more than 10m.

(5) 2m from the defined boundary of Canal, Vagu, Nala, Storm Water Drain of width up to 10m.

(iii) Unless and otherwise specified in the Master Plan / Zonal Development Plan.

(1) In case of (ii) (1) & (2) above, the buffer zone may be utilised for road of minimum 12m width, wherever feasible.

(2) In case of (ii) (2) above, in addition to development of recreational / green belt along the foreshores, a ring road or promenade of minimum 12m may be developed, wherever feasible.

(3) The above buffer zone to be left may be reckoned as part of tot lot or organized open space and not for setback requirements.

(iv) In case of Protection of Catchment area of Osmansagar and Himayatsagar lakes covered under the G.O.Ms.No.111 MA dated 08.03.1996, the restrictions on building and development activity imposed there in shall be applicable in Hyderabad Metropolitan Development Authority (HMDA) area.

(v) In case of areas along the Sea Coast, the Coastal Regulation Zone (CRZ) regulations shall be followed.

(b) **Railways**

The distance between the Railway Property Boundary and the edge of the building shall be 30m as per Indian Railways Works Manual or as per No Objection Certificate (NOC) given by the Railway Authorities.

(c) **Electrical Lines**

(i) In case of sites in the vicinity of High Tension Electricity Transmission Lines besides taking other safety precautions, a minimum safety distance (both vertical and horizontal) of 3m shall be maintained between the building and the High Tension Electricity

Lines and 1.5m shall be maintained between the building and the Low Tension Electricity Lines.

(ii) In case of Electricity Tower lines, the land all along below the tower line shall be developed as green belt to an extent of the width of tower base and on either side of green belt there shall be a minimum of 10m wide roads or as defined in the Master Plan.

(d) **Airport**

(i) Building Restrictions

(1) For building activity within the Restricted Zone / Air Funnel Zone near the airport, necessary clearance from the concerned Airport Authority shall be obtained.

(2) The building heights and other parameters shall be regulated as per the stipulations of the Airport Authority of India as notified in Gazette of India Extraordinary (S.O.1589) dated 30-06-2008 and as amended from time to time by Ministry of Civil Aviation, Government of India.

(3) Irrespective of their distance from the aerodrome, even beyond 22km limit from the Aerodrome Reference Point, no radio masts or similar installation exceeding 152m in height shall be erected except with the prior clearance from Civil Aviation Authorities.

(4) In respect of any land located within 1000m from the boundary of Military Airport no building is allowed except with prior clearance from the concerned airport authority with regard to building height permissible and safe distance to be maintained between the building and boundary of the aerodrome.

(ii) Other Structures

(1) No chimneys or smoke producing factories shall be constructed within a radius of 8km from the Airport Reference Point.

(2) Slaughter House, Butcheries, Meat shops and Solid Waste Disposal Sites and other areas for activities like depositing of garbage which may encourage collection of high flying birds, like eagles and hawks, shall not be permitted within 10 km from the Airport Reference Point.

(3) Within a 5km radius of the Aerodrome Reference Point, every structure/installation/building shall be designed so as to meet the pigeon/bird proofing requirement of the Civil Aviation Authorities. Such requirement may stipulate the prohibition of any cavity, niche, or other opening on the exterior of such building/installation/structure so as to prevent the nesting and habitation of pigeon or other birds.

(e) **Provisions laid under Environmental Impact Assessment Notification-2006:**

As per the provisions laid under the EIA Notification S.O.1533, Dt.14.9.2006 and it's amendment dt.01.12.2009 issued by MOE&F, GOI and Notifications issued from time to time with reference to "Building / Construction Projects/ Area Development Projects and Townships" complying with the following threshold limits fall under category B and are **required to obtain prior Environmental Clearance (EC) from State Environmental Impact Assessment Authority (SEIAA), Ministry of Environment and Forests, Government of India.**

Building/Construction Projects/Area Development Projects and Townships			
Project / Activity		B Category with threshold limit	Conditions, if any
8(a)	Buildings and Construction Projects	≥20000sq.m and <1,50,000sq.m of built up area#	#(Built up area for covered construction; in case of facilities open to the sky, it will be the activity area
8(b)	Townships and Area Development Projects	Covering an area ≥ 50ha and or built up area ≥1,50,000sq.m ++	++All Projects under Item8(b) shall be appraised as Category B1

(f) **Defense Establishments**

(i) In case of Sites within 500m distance from the boundary of Defense Areas / Military Establishments prior clearance of Defense Authority shall be obtained.

(ii) In case of Naval Science and Technological Laboratory (NSTL), Visakhapatnam, no building shall be allowed with in a distance of 20m from the boundary wall of NSTL, Visakhapatnam.

(g) **Oil / Gas Pipelines**

In case of Sites in the vicinity of Oil / Gas pipelines, clearance distance and other stipulations of the Respective Authority shall be complied with. The Oil / Gas Authorities shall also specify the clearances required stretch wise to Local Body.

(h) **Heritage Structures**

(i) In case of Sites located within the distance up to 100m from protected monuments as notified under Archeological Monuments and Ancient Sites and Remains Act 1955 and as amended no construction is allowed.

(ii) For the Sites located within distance of above 100m and up to 200m from the protected monuments, the construction is allowed only after obtaining prior permission from the National Monument Authority.

(iii) For the Sites located within the vicinity of any Heritage Structure notified as per the respective law, the prior clearance from the concerned authority shall be obtained.

(iv) For the development / redevelopment of any notified Heritage Structure the stipulations as prescribed by the respective authority shall be followed.

(i) **Religious Structures**

(i) In case of Sites located within a radius of 100m from the notified religious structure as given in the list in Annexure – VII / notified from time to time, the construction is allowed up to 10m height only.

(ii) For the Sites located within a radius of above 100m and up to 300m from the notified religious structure as given in the list in Annexure – VII / notified from time to time, only non high rise structures are allowed.

(j) **Special Regulations for Banjara Hills & Jubilee Hills Areas of Hyderabad**

(i) The following are the Special Regulations to maintain special characteristics of Banjara Hills and Jubilee Hills areas covered by Block 1 & 2, and part of Block No. 3 of Ward no. 8, of erstwhile Municipal Corporation of Hyderabad area of GHMC.

TABLE – I

Sl. No.	Type of the Building	Maximum Height
1.	Individual Residential Buildings/ Apartment Complexes	15m (Including Stilt floor)
2.	Commercial / Institutional Buildings	15m

(ii) The building with height beyond 10m in these areas shall be permitted only if the plot abuts to a minimum of 12m wide road.

(iii) In case of Jubilee Hills Co-operative House Building Society and Prashasan Nagar Co-operative House Building Society Layout, Jubilee Hills the height of the building is restricted to 10m excluding stilt with a maximum FAR of 1:1.

(iv) In case of plots abutting Road No.1, 2 & 3 Banjara Hills and Road No.36 Jubilee Hills the building height shall be limited to 30m and further the said height relaxations are allowed only on plots where the land owners have surrendered their land in the past or will surrender their land free of cost to Municipal Corporation for road widening.

(v) The setbacks shall be followed as per Table-III of rule-5 and also parking & other requirement shall be as per these rules.

4. REQUIREMENT OF APPROACH ROAD FOR BUILDING SITES / PLOTS:

(a) The minimum abutting existing road width required for various uses of building activities shall be as given below.

TABLE – II

Category	Type / Use of Building Plot permissible	Minimum abutting existing road width required (in meters)
A	**SITES IN OLD /EXISTING BUILT-UP AREAS /CONGESTED AREAS /SETTLEMENT / GRAM KHANTAM/ABADI (see Annexure-I)**	
	All Residential (other than Group Housing) & Commercial Buildings with maximum permissible height of 10 m For other categories the Minimum road width shall be as given in B1 Category	9 *
B	**SITES IN NEW AREAS / APPROVED LAYOUT AREAS**	
B 1	Non-High Rise (Residential) Buildings including Group Housing (Cellar and / or Stilt as permissible + maximum up to 5 floors), Basic level social amenities like Nursery School,	9 **

	Primary School / Religious Place /Clinic / Dispensary / Diagnostic Laboratory	
B 2	High Rise Buildings / Complexes up to height of 24 meters, Non High Rise Group Housing (Cellars as applicable + 6 floors), Group Housing with more than 100 units, Group Development Scheme; Middle school / Tutorial institution / General Industry / Godown / Petrol / Diesel/ Gas Filling Station; High School, Junior College/ Commercial Complex, Computer units /Office Building, ITES Complex, Nursing Home /Hospital of not more than 20 beds / Community Hall/Function/Marriage Hall/ Assembly Hall/Cinema Theater; Service establishment / Workshop; Others not specified in the Table and all Non High-Rise buildings up to 18m height	12
B 3	General Degree and other non-professional College / Polytechnic, ITI; Professional College Campus; Multiplex Complexes, Shopping Malls (above 4000sq.m), Hospitals of more than 20 beds and all High-Rise buildings above 24m and up to 30 m height	18
B4	All High Rise Building above 30 meters will be permitted as per the Minimum Road width and setbacks as specified in Table-IV of rule-7	

(b) *In case of Sites in Category-A, if a Site is abutting to a road which is less than 9m in width, a building may be permitted with a maximum height of 10m in such site, after leaving 4.5m from the Centre Line of such road for widening and the same shall be handed over to the Local Body and shall leave the prescribed setback as per Table-III after the said road widening portion. No relaxations are permissible in such cases.

(c) **In case of Sites in Category-B, if a Site is abutting to a road which is less than 9m in width, Individual Residential Building may be permitted with a maximum height of 12m, after leaving 4.5m from the Centre Line of such road for widening and the same shall be handed over to the Local Body and shall leave the prescribed setback as per Table-III of rule-5 after the said road widening portion. No relaxations are permissible in such cases.

(d) In case of Notified Slums / Economically Weaker Section (EWS) Buildings, the special regulations as notified by the Government from time to time shall be followed.

(e) The sites in old / Existing Built-up Areas / Congested Areas / Settlement / Gram Khantam / Abadi (Annexure-I) and List of Areas Prohibited for High-Rise Buildings (Annexure-II) shall be notified by the Local Bodies in consultation with the Competent Authority. The Government may add to or delete from the list of the said areas.

(f) In case of single plot sub-division approved by the competent authority, a means of independent access of minimum 3.6m pathway may be considered for Individual Residential Building and 6m for Non-High-Rise Group Housing Building.

5. PERMISSIBLE SETBACKS & HEIGHT STIPULATIONS FOR ALL TYPES OF NON-HIGH RISE BUILDINGS
(Buildings below 18m in height inclusive of Stilt / Parking Floor):

(a) The height of buildings permissible in a given site / plot shall be subject to restrictions given in **Annexure - I to II**.

(b) The minimum setbacks and permissible height as per **Table - III** and other conditions stipulated below shall be followed.

TABLE – III

Sl. No.	Plot Size (in Sq. m) Above – Up to	Parking provision	Height (in m) Permissible Up to	Building Line or Minimum Front Setback to be left (in m) Abutting Road Width					Minimum setbacks on remaining sides (in m)
				Up to 12 m	Above 12m & up to 18m	Above 18m & up to 24 m	Above 24m & up to 30m	Above 30m	
1	**2**	**3**	**4**	**5**	**6**	**7**	**8**	**9**	**10**
1	Less than 50		7	1.5	1.5	3	3	3	-
2	50-100	-	7	1.5	1.5	3	3	3	-
			10	1.5	1.5	3	3	3	0.5
3	100 - 200	-	10	1.5	1.5	3	3	3	1.0
4	200 - 300	Stilt floor	7	2	3	3	4	5	1.0
			10	2	3	3	5	6	1.5
5	300 - 400	Stilt floor	7	3	4	5	6	7.5	1.5
			12	3	4	5	6	7.5	2.0
6	400 - 500	Stilt floor	7	3	4	5	6	7.5	2.0
			12	3	4	5	6	7.5	2.5
7	* 500 - 750	Stilt floor	7	3	4	5	6	7.5	2.5
			12	3	4	5	6	7.5	3.0
			15	3	4	5	6	7.5	3.5
8	750 - 1000	Stilt + One Cellar floor	7	3	4	5	6	7.5	3.0
			12	3	4	5	6	7.5	3.5
			15	3	4	5	6	7.5	4.0
9	1000 - 1500	Stilt + 2 Cellar floors	7	3	4	5	6	7.5	3.5
			12	3	4	5	6	7.5	4.0
			15	3	4	5	6	7.5	5.0
			18**	3	4	5	6	7.5	6.0
10	1500 - 2500	Stilt + 2 Cellar floors	7	3	4	5	6	7.5	4.0
			15	3	4	5	6	7.5	5.0
			18**	3	4	5	6	7.5	6.0
11	Above 2500	Stilt + 2 or more Cellar floors	7	3	4	5	6	7.5	5.0
			15	3	4	5	6	7.5	6.0
			18**	3	4	5	6	7.5	7.0

(c) Stilt Floor meant for parking is excluded from the permissible height in the above Table. Height of stilt floor shall not be less than 2.5m. In case of parking floors where mechanical system and lift are provided, height of such parking floor shall not be less than 4.5m.

(d) *In case of commercial buildings proposed in plots having an extent of 500-750sq.m cellar floor for parking may be considered subject to condition that required parking shall be fulfilled as per Table-V of rule-13 and feasibility on ground.

(e) **Buildings of height above 15m and below 18m in Sl.Nos.9, 10 and 11 above, shall be permitted only if such plots abut minimum 12m wide roads only.

(f) **Other conditions**:

(ii) The setbacks are to be left after leaving the affected area of the plot / site, if any, for road widening.

(iii) Where a site abuts more than one road, then the front setback should be insisted towards the bigger road width and for the remaining side or sides, the setback as at Column-10 shall be insisted. In case of individual residential buildings the option is given to the applicant to propose front setback on one of the roads. In such case he shall not have access from the other side / sides. On the other side / sides the applicant can leave the setback either as per the required front setback based on the road width or to provide the side setback as given in Column-10.

(iiii) A strip of at least 1m greenery / lawn along the frontage of the site within the front setback shall be developed and maintained with greenery.

(ivi) For Plots above 300sq.m in addition to (iii) above, a minimum 1m wide continuous green planting strip in the periphery on remaining sides are required to be developed and maintained within the setback.

(vi) For all residential / institutional / industrial plots above 750sq.m, in addition to (iii) and (iv) above, 5% of the site area to be developed as organized open space and be utilized as greenery, tot lot or soft landscaping etc., and shall be provided over and above the mandatory setbacks. Such organized open space could be in more than one location and shall be of a minimum width of 3m with a minimum area of 15sq.m at each location.

(vii) If the strip of greenery / lawn and the organized open space (tot lot) are not maintained, 10% of additional Property Tax every year would be imposed as penalty by the Sanctioning Authority till the condition is fulfilled.

(viii) In all plots 750sq.m and above, provision shall be made for earmarking an area of 3m X 3m for the purpose of setting of public utilities like distribution transformer, etc. within the owner's site subject to mandated public safety requirements.

(viiii) In case of plots 300 - 750sq.m, it is permitted to transfer up to 1m of setback from any one side to any other side without exceeding overall permissible plinth area. The transfer of setback from front setback is not allowed.

(ixi) In case of plots above 750sq.m, it is permitted to transfer up to 2m of setback from any one side to any other side without exceeding overall permissible plinth area, subject to maintaining of a minimum 2.5m setback on other side and a minimum building line. The transfer of setback from front setback is not allowed.

(xi) For narrow plots having extent not more than 400sq.m and where the length is 4 times of the width of the plot, the setbacks on sides

may be compensated in front and rear setbacks so as to ensure that the overall aggregate setbacks are maintained in the site, subject to maintaining a minimum of side setback of 1m in case of buildings of height up to 10m and minimum of 2m in case of buildings of height above 10m and up to 15m without exceeding overall permissible plinth area. (This Rule shall not be applicable for made-up plots).

(xii) Where the lighting and ventilation of a building is through the means of a chowk or inner courtyard or interior open space / duct, such open space shall be open to sky and of area at least 9sq.m and no side shall be less than 2m. Such open spaces / ducts may be allowed above stilt floor.

(xiii) The space between 2 blocks shall not be less than the side setback of the tallest block as mentioned in Table - III and this shall not be considered for organised open space (tot lot).

(xiiii) Where all the owners of sites along an abutting road come forward for widening of the road by undertaking preparation of a Road Development Plan which would improve circulation in the area and duly approved by the competent authority, and by leaving the area affected in the widening of such road free of cost and implement it within one year, then higher height of the corresponding widened road width would be considered for such sites.

(xivi) Splay at road junctions, including 'Y' junctions shall be provided as follows. The area of such splay would be deemed to form part of the road junction.

Sl.No	Road Width (in m)	Splay / Offset (in m)
1	Less than 12	3 X 3
2	Above 12 up to 24	4.5 X 4.5
3	Above 24	6 X 6

(xvi) As per the provisions of the Andhra Pradesh Fire Service Act, 1999, Residential buildings of height more than 18 m, Commercial buildings of height 15m and above and buildings of public congregation like Educational Buildings, Cinema Theatres, Function Halls and other Assembly Buildings on plot area of 500Sq.m. and above or of height above 6m are required to obtain prior clearance from Andhra Pradesh State Disasters Response & Fire Services Department from fire safety point of view.

(xvii) Stepped type buildings or incremental type buildings may be allowed only in respect of individual residential or educational / institutional buildings and such incremental development would be considered only after a minimum time period of 5 years.

(xvii) For the purpose of these Rules, the following conversion from M.K.S. and F.P.S. system shall be reckoned for the **road widths only**:

(1) 3m = 10ft (2) 6m = 20ft (3) 7.5m = 25ft (4) 9m = 30ft
(5) 12m = 40ft (6) 15m = 50ft (7) 18m = 60ft (8) 24m = 80ft
(9) 30m = 100ft (10) 45m = 150ft (11) 60m = 200ft.

(xviii) All building applications for sanction of building permission for construction of above 10m height shall be accompanied with the following details:

(a) Report of Soil Test / Geo-technical Investigation Report issued after personal inspection by Institution / Consultant empanelled with / licenced by the local authority.

(b) Structural designs and drawings prepared duly taking the soil bearing capacity into consideration and certified by qualified Structural Engineer / Consultant Firm empanelled with / licenced by the local authority. The Structural Engineer / Consultant Firm is held responsible for defect in the design.

(c) Building Plan and Application shall be invariably signed by the owner of the property, builder if any, the Architect and the Structural Engineer who designed the structure. They shall give their present and permanent addresses.

(d) If the construction is being taken up by a builder, an attested copy of the registered agreement entered between the owner of the property and the builder shall be submitted. In case of any changes in the agreement at a later date, a copy of the same shall also be submitted to the local authority.

(e) An undertaking on a Stamp Paper of Rs.100/-duly signed by the owner and builder specifying that no flat or built-up area shall be given possession to the purchaser / tenant unless they obtain the occupancy certificate from the local authority and provide all regular service connections.

(f) Contractor / Builders / Developer / Owner shall submit All Risks Insurance Policy for the construction period.

6. RESTRICTIONS ON PROJECTIONS IN MANDATORY OPEN SPACES:

The following are the Restrictions on Projections in the mandatory open spaces / setbacks / interior open spaces:

(a) Cornice, Chajjas / weather shades only of width not exceeding 60cm shall be allowed in the mandatory setbacks.

(b) No balcony projections or corridor shall be permitted projecting within the mandatory open spaces / setbacks in case of non-high rise buildings. These, if provided for, shall be set back as per the minimum mandatory open spaces and the setbacks shall be clear from the edge of the balcony or corridor. However, a Portico or Canopy without access to the top may be considered in the front open space.

(c) In case of Individual Residential Building in plots more than 300sq.m:

(i) In the front setback only a security guard booth of 2sq.m is allowed.

(ii) Septic tank, well may be allowed in the rear and side open spaces.

(iii) A setback of at least 1m from the property or boundary line of the plot shall be provided for these structures.

(iv) Parking sheds, generator room may be allowed in the rear and side open Spaces.

(v) The height of these accessory buildings shall not be more than 2.5m and shall not occupy more than $1/4^{th}$ of the plot width. These shall be so located that they do not hinder the fire safety measures and operations.

7. REQUIREMENTS FOR HIGH RISE BUILDINGS:

(a) **High Rise Buildings / Complexes**

(i) High Rise Buildings / Complexes shall be permissible only in areas other than those given in Annexure - I & II.

(ii) The minimum size of plot for High Rise building shall be 2000sq.m.

(iii) In respect of sites proposed for high rise buildings and affected in road widening where there is shortfall of the net plot size, up to 10% of such shortfall in net plot area would be considered with the proposed height and corresponding minimum all round setbacks.

(iv) Every application to construct or reconstruct a High Rise building or alteration to existing High Rise building shall be made in the prescribed form and accompanied by detailed plans, floor plans of all floors along with complete set of structural drawings and detailed specifications duly certified by a qualified licenced structural engineer.

(v) Prior Clearance from Airport Authority:

For any High Rise Building located in the vicinity of airports as given in the National Building Code, the maximum height of such building shall be decided in consultation with the Airport Authority and shall be regulated by their rules / requirements.

(vi) Prior No Objection Certificate (NOC) from the Andhra Pradesh State Disasters Response & Fire Services Department:

For all High Rise Buildings prior No objection Certificate (NOC) from the Andhra Pradesh State Disasters Response & Fire Services Department shall be obtained and copy of the approved plan and No Objection Certificate (NOC) issued by the said department shall be enclosed along with the building application.

(vii) In every high rise building site, an organized open space shall be utilized as greenery, tot lot or soft landscaping, etc. shall be provided over and above the mandatory setbacks to be left in and around the building. This space shall be at least 10% of total site area at ground level open to sky and shall be a minimum width of 3m. This may be in one or more pockets with minimum area of 50sq.m at each location.

(viii) In addition to the above, a minimum of 2m wide green planting strip in the periphery on all sides within the setbacks are required to be developed and maintained.

(ix) Buildings abutting major road of 30m and above width shall be permitted only after providing black-topped service roads of minimum 7m width with minimum 2 Lane carriageway with in the defined right of way. It will be the responsibility of the developer / builder / owner to provide the above service road of the standards fixed by the Sanctioning Authority at his own cost. The Sanctioning Authority may consider sanctioning building permission if the developer / builder / owner deposits the full cost for laying such service road to the Sanctioning Authority. The amount so levied and collected shall be maintained in a separate exclusive account by the Sanctioning Authority and utilized only for this purpose.

(x) The minimum abutting road width and all round open space / setback for High Rise Building / Complex shall be as follows:

TABLE – IV

Height of building (in meters)		Minimum abutting road width required (in meters)	Minimum all-round open space on remaining sides (in meters) *
above	**Up to**		
1	**2**	**3**	**4**
-	21	12	7
21	24	12	8
24	27	18	9
27	30	18	10
30	35	24	11
35	40	24	12
40	45	24	13
45	50	30	14
50	55	30	16
After 55m 0.5m additional setback for every 5m of height shall be insisted			

(xi) * The front open space shall be on the basis of the abutting road width and shall be either as given in Col. 4 of above Table - IV or the Building Line given in Table - III of rule-5 whichever is higher.

(xii) The open space to be left between two blocks shall be equivalent to the open space mentioned in Col. 4 of above Table – IV and this shall not be considered for organized open space (Tot lot).

(xiii) In case of high rise buildings up to 30m height, it is permitted to transfer up to 2m of setback from one side to the other side, which needs to be uniform at any given point, subject to maintaining of minimum setback of 7m on all sides subject to not exceeding the permissible / allowable plinth area.

(xiv) The balcony projection of up to 2m may be allowed projecting onto the open spaces for upper floors from 6m height onwards.

(xv) Where the lighting and ventilation of a building is through the means of a chowk or inner courtyard or interior open space/duct, such open space shall be open to sky and area of at least 25sq.m and no side shall be less than 3m.

(b) **Tower and Podium Type Building:**

(i) Height of the building shall be allowed up to 50m.

(ii) For Podium, i.e., Ground plus first floor: alround setbacks shall be 7m.

(iii) For Tower block: The coverage and alround setbacks shall be minimum 50 % of the Podium Block, and shall be atleast 3m from the Podium edge on all sides,

(iv) The fire safety and fire escape measures for the Tower Block shall be independent of the Podium Block.

(c) **"Stepped Type" or "Pyramidal Type" Building:**

Such type of High Rise Building blocks may be allowed for heights above 30m with the following open space requirements:

(i) At Ground level: Minimum 9m all round open space for the first five floors.

(ii) At Upper floors: Increase of 1m all round open space or more, for every 5 upper floors or 15m height or part thereof, over and above the ground level open space of minimum 9m.

(d) **Multiplex Complexes:**

In case of Multiplex Complexes, "The Andhra Pradesh Rules for Construction and Regulation of Multiplex Complexes, 2007" issued vide G.O.Ms.No. 486, Dt.07.07.2007 shall be followed (Annexure-III).

(e) **Hospital Buildings with more than 30m height**

In case of Hospital Buildings with more than 30m height, "The Andhra Pradesh Fire Prevention and Safety measures in High Rise Hospital Buildings (above 30m height) Rules 2011" issued vide G.O.Ms.No.2, Dt.03.01.2011 shall be followed (Annexure-IV).

8. GROUP DEVELOPMENT SCHEMES:

(a) The minimum site / plot area shall be 4000sq.m.

(b) The minimum abutting existing road width shall be 12m and black topped.

(c) If the site is not abutting to an existing road, the proposals should be promoted with the immediate improvement of the accessibility of the site from the nearest main road by way of an approved Road Development Plan by the Competent Authority with a minimum width of 12m which

should be implemented by the Licenced Developer within a period of three years.

(d) Group Development Schemes shall be considered where the site is developed together with construction of building and all amenities and facilities and not disposed as open plots.

(e) All such applications shall in addition to the requirements under these Rules be accompanied by the provisional plans of.

(i) A Services and Utilities Plan as per standards for water supply system, drainage and storm water disposal system, sewerage system, rain water harvesting structures, and for other utilities.

(ii) A Landscaping plan including rain water harvesting / water recycling details.

(iii) Parking & Internal Circulation Plan along with common pool parking area plan, if any.

(f) The above shall be drawn to suitable scale with relevant details.

(g) Minimum of 10% of site area shall be earmarked for organised open space and be utilised as greenery, tot lot or soft landscaping, etc. and shall be provided over and above the mandatory setbacks. Such open space shall be open to sky with a minimum width of 3m. This may be in one or more pockets with minimum area of 50sq.m at each location.

(h) No additional or proportionate open space charges need to be levied in such schemes.

(i) These shall not be applicable in case of Government sponsored Housing Scheme / approved Non Government Organisations (NGOs) or private schemes, and the guidelines and requirements as given in the National Building Code for Low Cost Housing / Government orders shall be followed.

(j) The Building setbacks shall be as per the type of housing & requirements given above for the said type of housing and as per Table - III of rule-5 and Table – IV of rule-7. The open space to be left between two blocks also shall be equivalent to the setback mentioned in Column -10 of Table-III of rule-5 and Column - 4 of Table- IV of rule-7 as the case may be.

(k) A thorough public access road of 12m width with 2-lane black-topped is to be developed within the applicant's site on any one side at the periphery / as per suitability and feasibility for the convenience of accessibility of other sites and lands located in the interior. This condition would not apply if there is an existing abutting peripheral road on any side.

(l) In case of blocks up to 12m height, access through pathways of 6m width branching out from the internal roads / loop road would be allowed. All internal roads and pathways shall be developed with good design, practices, good built environment and standards.

(m) Road requirements:

- 9m to 18m for main internal approach roads;
- 9m for other internal roads and also for looped roads.
- 8m for cul-de-sacs roads (with a minimum radius 9m.) between 50-100m length.

(n) All roads and open spaces mentioned in this Rule shall be handed over to local body at free of cost through a registered gift deed before issue of occupancy certificate. The society / association may in turn enter into agreement with the local authority for utilizing, managing and maintaining the roads and open spaces. In case of any violation or encroachment, the local authority shall summarily demolish the

encroachments and resume back the roads and open spaces and keep it under its custody.

9. ROW TYPE HOUSING / ROW TYPE SHOPPING PRECINCTS:

(a) Row Houses shall abut internal roads only.
(b) Minimum site area shall be not less than 1000sq.m.
(c) Minimum size of individual plot shall be 50sq.m.
(d) Maximum plot size shall be 125sq.m.
(e) Number of plots in a row shall not be more than 8.
(f) Separation between two blocks shall not be less than 6 m which may be an open space or an alley/pedestrian plaza.
(g) Only internal staircase is allowed.
(h) Minimum width of internal roads: 9m.
(i) Internal cul-de-sac road 6m with maximum length 50m is allowed.
(j) Minimum open space **:** 10 % of site area.
(k) Height permissible**:**
   i. Ground + 1 floor or 7m in plot area up to 100sq.m.
   ii. Ground + 2 floors or 10m in plot area of above 100sq.m.
(l) Minimum setbacks: Front 3m ; Rear 1.5m.
(m) The setbacks in a row can be interchangeable.
(n) In case of row type shopping precincts, back to back shops with above front setback of 3m would be allowed.
(o) In case of very large projects more than 5 acres, common amenities and facilities like shopping center, community hall/club house etc. are required to be provided in minimum 5 % of the site area.
(p) In case of Row Type Shopping Precincts, common basement parking in one or more levels would be permissible subject to conditions mentioned in Rule -13.

10. CLUSTER HOUSING

(a) Minimum site area shall be not less than 1000sq.m.
(b) Minimum plot size 25sq.m with maximum number of 20 houses in a cluster.
(c) Minimum size of cluster open space 36sq.m with a minimum width of 6m.
(d) Height permissible 2 floors or 6m.
(e) Minimum access road 9m.
(f) Internal access may be through pedestrian paths of 6m.
(g) Minimum space between two clusters shall be 6m which may be utilised as pathway / alley.
(h) Building setbacks: No setbacks are needed for interior clusters as the lighting and ventilation is either from the central open space of cluster and the surrounding pedestrian pathway / access road of the cluster. However, interior courtyards may be provided for larger plots and building areas to facilitate lighting and ventilation. For end clusters sides that are abutting peripheral thoroughfare roads or property boundary, setback / building line shall be as per Table – III of rule-5.
(i) In case of very large projects more than 5 acres, common amenities and facilities like shopping center, community hall/club house etc. are required to be provided in minimum 5 % of the site area.

11. PROVISIONS FOR ECONOMICALLY WEAKER SECTION (EWS) / LOW INCOME GROUP (LIG) HOUSING CATEGORY

(a) In case of areas falling in Hyderabad Metropolitan Development Authority (HMDA), Visakhapatnam Urban Development Authority (VUDA), Vijayawada–Guntur–Tenali–Mangalagiri Urban Development Authority

(VGTMUDA) where the proposed site area for residential projects is 4000sq.m and above, the developer shall provide at least 20% of developed land for Economically Weaker Sections (EWS) and Low Income Groups (LIG) housing in such projects.

(b) In case of areas falling in Municipal Corporations and the Urban Development Authorities in the State except Greater Hyderabad Municipal Corporation, Greater Visakhapatnam Municipal Corporation, Vijayawada Municipal Corporation, Guntur Municipal Corporation, HMDA, VUDA, VGTMUDA areas where the proposed site area for residential projects is 3000sq.m and above, the developer shall provide at least 20% of developed land for Economically Weaker Sections (EWS) and Low Income Groups (LIG) housing in such projects.

(c) In case of areas falling in Municipalities / Nagar Panchayats constituted under the provisions of the Andhra Pradesh Municipalities Act, 1965 and excluding the Municipalities which are within the jurisdiction of any Urban Development Authority where the proposed site area for residential projects is 2000sq.m and above, the developer shall provide at least 20% of developed land for Economically Weaker Sections (EWS) and Low Income Groups (LIG) housing in such projects.

12. BUILDINGS WITH CENTRAL COURTYARD FOR COMMERCIAL USE:

(a) 'U' type commercial buildings with central courtyard are allowed with a minimum plot area of 2000sq.m with the following conditions:

(b) The Front setback shall be as per Table-III of rule-5 & Table-IV of rule-7 for Non High Rise & High Rise buildings respectively.

(c) The minimum open space / setback on sides and rear except front, shall be

(i) 2m for building height up to 15m;

(ii) 3m for building height up to 18m;

(iii) 7m in case of high rise buildings up to 30m height and buildings coming under purview of Andhra Pradesh Fire Services Act-1999.

(d) The area so saved is transferred to the central area / space or court yard;

(e) The depth of such courtyard shall be at least 50% of the average building depth and the minimum width shall be 10m.

13. PARKING REQUIREMENTS:

(a) In all Buildings provision shall be made for parking spaces as per the following requirements:

TABLE – V

Sl. No	Category of building/ activity	Parking area to be provided as percentage of total built up area					
		HMDA Area		All Municipal Corporations & UDA Areas		Municipalities/ N.Ps/ G.Ps. other than UDA Areas	
		GHMC	Municipalities/ N.Ps/ G.Ps. in HMDA Area	All Municipal Corporations	Municipalities/ N.Ps/ G.Ps. in UDA Areas	Selection & Special Grade Municipalities	Other Municipalities/ N.Ps/ G.Ps.
1	2	3	4	5	6	7	8
1	Multiplexes	60	50	60	50	60	50

2	Shopping Malls (above 4000 sq.m), Information Technology Enabling Services Complexes	60	50	50	40	40	30
3	Hotels, Restaurants, Lodges, Cinema halls, Business buildings, Other Commercial buildings, Kalyana Mandapams, Offices, & High-Rise Buildings / Complexes of Non Residential Category	40	30	30	25	25	25
4	Residential Apartment Complexes, Hospitals, Institutional buildings, Industrial buildings, Schools, Colleges, Other Educational Buildings & Godowns & Others	30	20	20	20	20	20

(b) The parking spaces may be provided in

(i) Basements or cellars (one or more) / multi-level (allowed for plots 750sq.m and above only) or

(ii) Stilt floor or in upper floors (at any level) or

(iii) The Open space over and above the setbacks i.e. after leaving the setbacks to be left around the building with adequate vehicular access, aisle, drives, ramps required for maneuvering of vehicles, or

(iv) Common pool parking area (in the case of Group Housing Scheme / Cluster Housing / Row Housing Schemes).

(v) Any of the above or all the above or combination of the above.

(vi) Wherever Mechanical system and car lifts are proposed enabling two tier parking, the required parking is computed accordingly.

(c) The other aspects for providing parking spaces are:

(i) Misuse of the area specified for parking of vehicles for any other use shall be summarily demolished / removed by the Enforcement Authority.

(ii) The parking spaces should be efficiently designed and clearly marked and provided with adequate access, aisle, drives and ramps required for maneuvering of vehicles.

(iii) Cellar floor shall be used only for parking and not for any habitation purpose. There shall be ventilation to cellars with not less than 2.5% of each cellar floor area.

(iv) In respect of Apartment Complexes / Building / Block of residential nature, in sites up to 750sq.m the Parking requirement shall be deemed to be met if the entire stilt floor is left for parking.

(v) Common and Continuous cellar parking floors between adjoining buildings would be allowed depending upon structural safety aspects, mutual agreement between owners, etc.

(vi) In the Stilt floor a watchman room and 2 toilets (W.C), with maximum built up area of 25sq.m may be allowed. Such space shall not be disposed and shall be part of common facility of the complex. For the sites above 750sq.m area it is permitted subject to fulfillment of parking requirement as per Table-V.

(vii) For parking spaces in basements and upper floors, at least two ramps of minimum 3.6m width or one ramp of minimum 5.4m width and adequate slope 1 in 8 shall be provided. Such ramps shall not be allowed in mandatory setbacks including building line, however they may be permitted in the side and rear setbacks after leaving minimum 7m of setback for movement of fire-fighting vehicles. Access to these may also be accomplished through provisions of mechanical lifts.

(viii) The minimum width of the drive way shall be 4.5m.

(ix) In case where the permissible set back is less than 4.6m the pillars position in stilt floor shall be so designed that there shall be clear space of 3.6m (excluding Greenery) is available for movement of vehicles.

(x) Cellar shall be with a setback of at least 1.5m in the sites of extent of up to 1000sq.m, 2m in the sites of extent of more than 1000sq.m and up to 2000sq.m, and 3m in the sites of extent of more than 2000sq.m from the property line. In case of more than one cellar, 0.5m additional setback for every additional cellar floor shall be insisted.

(xi) Up to 10% of cellar may be utilised for utilities and non-habitation purpose like A/C Plant room, Generator room, Sewerage Treatment Plant (STP), Electrical installations, Laundry, etc,

(xii) Visitors' parking shall be provided with minimum 10% of the parking area mentioned in Table-V and may be accommodated in the mandatory setbacks other than front setback where ever such setbacks are more than 6m (excluding green strip).How ever this is not permissible in case of transfer of setback. The Visitors' Parking facility shall be open to all visitors which shall be properly demarcated on ground.

14. ENCOURAGEMENT FOR PROVISION OF PARKING COMPLEXES

To encourage parking complexes, Parking lots and enclaves, owners who develop parking complexes / parking lots, the following incentives would be considered:

(a) Equivalent built up area of such Parking Complex / or area of Parking lot as the case may be would be considered as Transferable Development Right by the Competent Authority.

(b) In an existing area/locality where an owner or two or more owners come together and develop combined or Common Parking Complex, Pedestrian Plaza / Subway, or improve / facilitate additional access by linking with surrounding roads etc for public usage are provided, as part of their premises / land development / improving the urban design aspects, additional bonus built up area / Transferable Development Right (TDR) would be considered by the sanctioning authority.

(c) The setbacks for Parking Complexes shall be as follows: front setback – as per building line in Table-III of rule-5.

Setbacks on remaining sides – 50% of setbacks given in Table-III of rule-5.

(d) No fees and other charges shall be charged by the Sanctioning Authority for the area / floors developed as Parking Complex / Parking lot;

(e) A moratorium on property tax for 5 years would be considered;

(f) For the next 5 years – Property Tax shall be levied on the lowest slab of residential category.

(g) Such parking complexes may be permitted along main commercial roads, City Centers, close to Bus Stations, Railway Stations and any Public Transport System so as to encourage parking facility, etc. Access to these parking spaces in such Complexes may be accomplished through provision of mechanical lifts. Such areas may be identified by the sanctioning authority and notified to public every year.

15. COMPLIANCE OF NATIONAL BUILDING CODE PROVISIONS FOR AMENITIES AND FACILITIES IN ALL BUILDINGS

(a) **Non High Rise Buildings**

(i) The building requirements and standards other than heights and setbacks specified in the National Building Code - 2005 shall be complied with.

(ii) Such buildings shall be undertaken by owners by engaging registered architect, licenced builders / developers and licenced structural engineers. The designs and building plans shall be countersigned by the owner, licenced developer, registered architect, licenced engineer and a qualified & licenced Structural Engineer who shall be responsible for the supervision, structural safety, fire safety and specifications compliance of such buildings.

(iii) The work of the building services like sanitation, plumbing, fire safety requirements, lifts, electrical installations, and other utility services shall be executed under the planning, design and supervision of qualified and competent technical personnel.

(iv) The parking requirements shall comply as given in these rules. The parking facilities and vehicles driveways etc. shall be maintained to the satisfaction of the Sanctioning Authority.

(v) All Public and Semi-Public Buildings and Institutional Buildings shall be designed and constructed to provide facilities to the Specially Enabled Persons as prescribed in the National Building Code of India as given in Annexure – V.

(vi) In all Buildings, the requirements of parts of the building like size and area requirements of habitable rooms, kitchen, bathrooms and Water closets, other areas, corridor and staircase widths, service ducts, etc. shall conform to the National Building Code of India.

(vii) Rain Water Harvesting Structures shall be provided as given in G.O.Ms.No.350 MA, Dated. 09.06.2000 (Annexure-VI).

(viii) Provisions of the Andhra Pradesh Water, Land and Trees Act, 2002 shall be complied in such sites and schemes where ever applicable.

(ix) Buildings shall be designed for compliance with earth quake resistance and resisting other natural hazards. The Completion Certificate shall mention that the norms have been followed in the design and construction of buildings for making the buildings

resistant to earthquake, compliance with structural safety and fire safety requirements.

(x) In case of Group Housing Buildings where there are 100 units and above, a minimum 3% of the total built up area shall be planned and developed for common amenities and facilities like convenient shopping, committee hall / club house, crèche, gymnasium etc. as per National Building Code of India (NBC)-2005. Amenities block shall not be part of the residential blocks. However in case of single apartment block, amenities can be provided in the same block.

(xi) In case of Group Housing Buildings where there are 100 units and above, buildings proposed for Nursing Homes, Hospitals and Hotels provision for Solar Water Heating System and Solar Lighting System in the building and in the site for outdoor lighting, etc. shall be made and the applicant shall give a bank guarantee to this effect to the sanctioning authority for compliance of the same.

(xii) In case of Group Housing Buildings where there are 100 units and above, Nursing Homes, Hospitals and Hotels provision for Recycling of Water shall be made.

(b) **High Rise Buildings: in addition to the above the following conditions shall also be complied with**

(i) In addition to the required staircases and lifts, there shall be at least one fire escape staircase and lift. These staircases and lifts shall be got certified from the manufacturer's authorized service technical personnel from time to time.

(ii) Such buildings shall be undertaken by owners by engaging registered architect, licenced builders / developers and licenced structural engineers. The designs and building plans shall be countersigned by the owner, licenced developer, registered architect, licenced engineer and a qualified & licenced Structural Engineer who shall be responsible for the supervision, structural safety, fire safety and specifications compliance of such buildings.

(iii) Provision for power generator shall be made.

(iv) These buildings shall be planned, designed and constructed to ensure fire safety requirements are met and maintained and shall comply in accordance with the Fire Protection Requirements of National Building Code of India (NBC)-2005 / Andhra Pradesh Fire Services Act,1999.

(v) The facilities for providing fire protection and firefighting facilities in such buildings should be in compliance with the stipulations laid down and clearance issued by the Andhra Pradesh State Disasters Response & Fire Services Department from time to time. No Objection Certificate (NOC) from the Andhra Pradesh State Disasters Response & Fire Services Department shall be obtained from time to time regarding the fire safety requirements and facilities installed. The designs and installations regarding fire protection and safety measures including exit requirements and smoke containment and smoke management measures shall be undertaken through a fire engineer / fire consultant.

(vi) Buildings shall be designed for compliance with earth quake resistance and resisting other natural hazards. The Completion Certificate shall mention that the norms have been followed in the design and construction of buildings for making the buildings resistant to earthquake, compliance with structural safety and fire safety requirements.

16. CONCESSIONS IN ROAD WIDENING CASES:

(a) Where any land or site or premises for building is affected in the Statutory Plan / Master Plan Road or Circulation network or a road required to be widened as per Road Development Plan, such area so affected in the road or circulation network shall be surrendered free of cost to the Sanctioning Authority by the owner of land. No development permission shall be given unless this condition is complied with.

(b) Upon surrendering such affected area the owner of the site would be entitled to a Transferable Development Right (TDR) as given in Rule-17.

OR

The owner shall be allowed to construct an extra floor with an equivalent built area for the area surrendered subject to mandated public safety requirements.

OR

The owner shall be allowed to avail concessions in setbacks including the front set-back (subject to ensuring a building line of 6m in respect of roads 30m and above, 3m in respect of roads 18m and below 30m and 2m in respect of roads less than 18m and subject to ensuring minimum side and rear setback of 2m in case of building of height up to 12m and 2.5m in case of buildings of height above 12m and up to 15m and 3m for buildings of height above 15 and up to 18m).

(c) The extent of concessions given shall be such that the total built up area after concession shall not exceed the sum of built up area allowed (as proposed) on total area without road widening and built up area equivalent to surrendered area.

(d) In case of plots less than 750sq.m in addition to concessions in setbacks and height, the cellar floor may be allowed keeping in view of its feasibility on ground.

(e) In case of High Rise Buildings the concessions in setbacks, other than the front setback would be considered subject to maintaining minimum clear setback of 7m on the sides and rear side and such minimum setback area shall be clear without any obstructions to facilitate movement or fire fighting vehicles and effective firefighting operation.

(f) The above concessions shall be considered at the level of Sanctioning Authority / Competent Authority. The Sanctioning Authority / Competent Authority may consider any other concession as deemed fit with the prior approval of Government.

17. GRANT OF TRANSFERABLE DEVELOPMENT RIGHT:

(a) Transferable Development Right" (TDR) can be awarded only when such lands are transferred to the local body / Urban Development Authority as the case may be by way of registered gift deed. The award would be in the form of a TDR certificate issued by the Competent Authority / Sanctioning Authority.

(b) Grant of TDR can be considered by the Competent Authority / Sanctioning Authority for the following areas subject to the owners complying with the conditions of development above, as per the following norms:

(i) **For the Master Plan Road / Road Development Plan undertaken and developed**: equivalent to 200% of built up area of such area surrendered. **For conservation and development of lakes / water bodies / nalas foreshores & Recreational buffer development with greenery, etc:** equivalent to 100% of built up area of such recreational buffer area developed at his cost.

(ii) **For Heritage buildings and heritage precincts maintained with adaptive reuse:** equivalent to 100% of built up area of such site area.

(c) The TDR may be arrived at on the basis of relative land value and equivalent amount in both export and Import areas, as per the Registration Department records. The Competent Authority shall have the discretion in the matter of applicability of TDR. The TDR shall not be allowed in unauthorized buildings / structures / constructions and shall be considered only after the land is vested with the local authority / UDA. The TDR certificate issued would be valid or utilized / disposed only within the concerned local body area and as per guidelines and conditions prescribed.

(d) GUIDELINES ON TRANSFERABLE DEVELOPMENT RIGHT:

In order to adopt uniform guidelines throughout the State the following conditions and guidelines are prescribed.

(i) As and when the owner of the building intends to construct the building in the remaining area of the site, he is entitled to construct the building as per the provisions of these Building Rules. In the event the owner doesn't take up any construction, the owner is entitled for TDR which can be used *I* disposed depending on convenience.

(ii) A composite Register shall be maintained by the Sanctioning Authority as per the proforma enclosed at Annexure -VIII on the award of TDR and its sale / disposal and utilization. A responsible officer shall be the custodian of the Register.

(iii) At the time of sale / disposal / utilization of a particular TDR, the utilization details of the sale / disposal need to be entered at relevant columns in the register and that therefore the relevant file need to be referred to the custodian of the Register for making necessary entries in the register. The custodian is held responsible to enter relevant details in the register and also to enter utilization details in the TDR. When TDR Certificate is sold / utilized totally, the same shall be surrendered by the owners and the custodian shall take possession of the Certificate and make necessary entries in the register. As per Government Orders, TDR award is to be arrived on the basis of relevant land value at both export and import areas as per prevailing Registration value.

(iv) TDR can either be sold or can be utilized by the same owner depending on convenience.

(v) TDR can be allowed to be utilized for construction of one additional floor over the normal permissible floors without insisting additional setbacks subject to compliance of other norms.

(vi) Every TDR sold or disposed shall be accompanied by a prescribed agreement on Rs.l00/ - non-judiciary stamp paper between the person disposing the TDR and the person who intend to utilize the TDR. Draft agreement as per Annexure - XI.

(e) DOCUMENTS REQUIRED WITH APPLICATION FOR GRANT OF TRANSFERRABLE DEVELOPMENT RIGHT CERTIFICATE:

Application to be made by owner in the prescribed format giving the following details:

(i) Name of the owner with clear address, contact phone number, etc.

(ii) Copy of the ownership documents along with clear site plan and location plan.

(iii) Site Plan showing the land surrendered, its extent, location with dimensions.

(iv) Building permission Plan for the site by the urban local body.

(v) Details of Building permission granted / applied for like use or purpose of building, number of floors permitted, all-round setbacks, floor area permitted and utilized, parking area permitted; etc.

(vi) Whether already benefit of relaxations been utilized for the site?

(vii) Whether any Court case is pending against Urban Local Body?

(viii) Land value of the site where TDR is to be availed (latest copy from concerned Sub Registrar to be enclosed)

(ix) TDR admissible in terms of sq.m and equivalent land value.

18. URBAN DESIGN AND ARCHITECTURAL CONTROL

For certain areas as well as sites abutting major roads of 30m and above, the Competent Authority may enforce urban design and architectural control. These shall be detailed out keeping in view the development conditionalities and requirements given in these Regulations and the National Building Code norms. For this purpose, urban design and architectural control sheets / Plans approved by the Competent Authority shall be complied with.

19. BUILDING PERMIT / LICENSE FEES

(a) The Sanctioning Authority shall along with the Building Application levy and collect 2% of the Building Permit / License fees, subject to a maximum of Rs.10,000 as initial fees. The balance Building Permit / License Fees together with other fees and Charges shall be levied and collected before the issue of permission / sanction.

(b) In case of rejection of building application, the above initial fees would be forfeited.

(c) No fees and charges would be levied for parking spaces provided in any floor.

(d) The permission is valid for 5years in case of High Rise Buildings & Group Development Schemes and 3years in case of Non High Rise Buildings subject to condition that the construction shall be commenced with in 18months. The permission can be revalidated for another 2years on payment of building permit fee.

20. LEVY OF SPECIAL FEES AND OTHER PROVISIONS FOR CERTAIN AREAS:

The Sanctioning Authority with the specific approval of the Government may, when implementing such Projects, levy Special fees and other fees / charges for lands / sites / premises abutting or in the vicinity of the Ring Road or other highways / major roads or the Mass Rail Transit System / Light Rail Transit System / Multi Modal Transit System / Bus Rapid Transit System route indicated in the Master Plan, at the rates and procedure prescribed by the Government.

21. CITY LEVEL INFRASTRUCTURE IMPACT FEES APPLICABLE IN CERTAIN CASES:

(a) With a view to ensure development of City Level Infrastructure facilities and the City Level Infrastructure Impact Fees shall be levied as given in the table below:

TABLE – VI

Areas	Height (No. of Floors), Use of the Building and Rate in Rs. per sq. m of Built Up Area							
	Above 15 m & up to 7floors		Above 7 floors & up to 10 floors		Above 10 floors & up to 17 floors		Above 17 floors	
	Residential	Commercial, Offices, ITES, Institutional, Educational & Others (except Industrial)	Residential	Commercial, Offices, ITES, Institutional, Educational & Others (except Industrial)	Residential	Commercial, Offices, ITES, Institutional, Educational & Others (except Industrial)	Residential	Commercial, Offices, ITES, Institutional, Educational & Others (except Industrial)
1	2(a)	2(b)	3(a)	3(b)	4(a)	4(b)	5(a)	5(b)
HMDA Area								
GHMC	500	1000	750	1500	1500	2500	3000	5000
Municipalities	250	500	500	1000	1000	2000	2000	4000
G.P Areas	175	250	350	500	750	1000	1500	2000
UDA Areas								
Municipal Corporations	350	500	500	1000	1000	2000	2000	3000
Rest of the UDAs	175	350	350	500	750	1000	1500	2000
Other than UDA Areas								
Municipal Corporations	350	500	500	800	1000	1500	2000	2000
Municipalities Sel/Spl/1st grade	150	350	250	500	400	1000	800	1500
2nd/3rd/N.Ps/ G.Ps	100	200	200	300	300	500	500	1000

(b) For The first 15m height of the building (excluding stilt floor) there will be no levy of City Level Impact Fee.

(c) In case of Multiplexes the rates given in the Multiplex Rules shall be applicable.

(d) The Government may revise the above rates from time to time.

(e) The above rates shall not be applicable for Government Departments and Public Agencies like Urban Development Authority, Andhra Pradesh Industrial Infrastructure Corporation (APIIC), Local Bodies and Hyderabad Metropolitan Water Supply & Sewerage Board (HMWSSB). This exemption shall not be applicable for commercial projects taken up by such agencies.

(f) The amount levied and collected under the above Rule shall be credited and maintained in a separate escrow account by the concerned sanctioning authority and 50% of it shall be utilised for development of infrastructure in the same area and balance amount is to be utilised towards improvement of city level capital infrastructure in the area. An Infrastructure Plan and Action Plan for implementation is required to be undertaken by the Competent Authority and the said Fund is utilised accordingly.

22. INCENTIVES FOR OWNERS LEAVING MORE SETBACKS / INSTALLING SOLAR HEATING SYSTEM / LIGHTING / RAIN WATER HARVESTING / RECYCLING OF WASTE WATER:

The following incentives in terms of rebate in Property Tax will be given by the local authority for owners or their successors-in-interest who:

(i) Install and use solar heating and lighting system: 10% rebate.

(ii) Undertake both recycling of waste water and rain water harvesting structures: 10% rebate.

23. TECHNICAL APPROVAL FROM THE COMPETENT AUTHORITY

(a) Hyderabad Metropolitan Development Authority (HMDA) **/** Urban Development Authority (UDA) Areas:
In case of areas falling under the jurisdiction of HMDA **/** UDA, the development control powers shall be as per the delegation issued by the concerned HMDA **/** UDA from time to time.

(b) **Areas not covered under HMDA / UDA Areas:**

(i) Where the Town Planning Section Head is below the cadre of Deputy Director, the Sanctioning Authority is empowered to sanction the building permission up to 10m height in plot area up to 300sq.m, in the sites where the proposed activity is permissible in normal course as per Zoning Regulations.
If the site area is above 300sq.m and up to 1000sq.m. prior Technical Approval from the concerned Regional Deputy Director shall be obtained where the proposed activity is permissible in normal course as per Zoning Regulations.

(ii) Where the Town Planning Section Head is in the cadre of Deputy Director or above, the Sanctioning Authority is empowered to sanction the building permission in plot area up to 1000sq.m, in the sites where the proposed activity is permissible in normal course as per Zoning Regulations.

(iii) Other than (i) & (ii) above the proposals of building approvals shall be submitted to The Director of Town and Country Planning for prior Technical Approval.

(iv) In the Gram Panchayat areas covered under sanctioned General Town Planning (GTP) Scheme the Sanctioning Authority is empowered to sanction the individual residential building permission up to 10m height in plot area up to 300sq.m, in the sites where the proposed activity are permissible in normal course as per Zoning Regulations. In respect of other cases prior Technical Approval shall be obtained from the Competent Authority i.e. Director of Town & Country Planning.

(v) In Case of Group Development, Group Housing Schemes like Cluster Housing / Row Housing / Semidetached Housing Schemes and Gated Community, Technical approval from the Competent Authority is required to be obtained.

24. HIGH RISE BUILDING COMMITTEE

The following committees shall be constituted for scrutiny of High Rise Building applications.

(a) Greater Hyderabad Municipal Corporation (GHMC)/Greater Visakhapatnam Municipal Corporation (GVMC)/Vijayawada Municipal Corporation (VMC).

1. Chief City Planner / Town Planning Section Head -Member Convener
2. Engineering Section Head -Member
3. Director of Town & Country Planning (DT&CP) or his nominee-Member
4. Town Planning Section Head of Urban Development Authority (UDA) or his nominee -Member

The Committee shall give the recommendations to the Commissioner.

(b) Hyderabad Metropolitan Development Authority (HMDA)/All Urban Development Authorities (UDA) (Other than the area covered in "a" above.)

1. Head of the Town Planning wing of concerned UDA -Member Convener
2. Town Planning Section Head or his nominee of concerned ULB-Member
3. Engineering Section Head of concerned UDA / ULB -Member
4. Director of Town & Country Planning or his nominee. -Member

The Committee shall give the recommendations to the Metropolitan Commissioner / Vice Chairman.

(c) Other Municipal Corporations / Municipalities / Nagar Panchayats.
(Other than the area covered in (a) & (b) above i.e. DT&CP Jurisdiction)

1. Commissioner of concerned ULB -Member
2. Regional Deputy Director of Town Planning -Member
3. Superintendent Engineer Public Health -Member
4. Town Planning Section Head of concerned ULB -Member Convener
5. Senior Practicing Architect / Planner nominated by DT&CP -Member

The Committee shall give the recommendations to the Director of Town & Country Planning.

[

(d) Gram Panchayats covered in Sanctioned Master Plan Area.
(Other than the area covered in (a), (b) & (c) above
i.e. DT&CP Jurisdiction)

1. Regional Deputy Director of Town Planning (RDDTP) -Member Convener
2. Superintendent Engineer Public Health -Member
3. Senior Practicing Architect / Planner nominated by DT&CP -Member

The Panchayat Secretary shall submit the proposal through the concerned Regional Deputy Director of Town Planning (RDDTP) to place before the committee and the committee shall give the recommendations to the Director of Town & Country Planning.
The guidelines for Nomination of Senior Practicing Architect / Planner shall be followed as mentioned in Annexure - XII.

25. COMPLIANCE BY OWNER FOR ENSURING CONSTRUCTION IS UNDERTAKEN AS PER SANCTIONED PLAN:

(a) The owner and builder / developer shall give an Affidavit duly notarized to the effect that in the case of any violation from the sanctioned building plan, the Enforcement Authority can summarily demolish the violated portion.

(b) In respect of Apartment Buildings, the owner or builder shall give a Declaration duly specifying the number of floors permitted, along with the extent of each floor. In case of any violation with regard to the Declaration, the Enforcement Authority can demolish the violations.

(c) Before release of the building sanction by the sanctioning authority, the owner of the plot / site is not only required to produce the original Sale Deed, registered under the provisions of the Indian Registration Act, 1908 / Certified copy issued by Stamps and Registration Department for the perusal of the sanctioning authority and cross verification with the attested copy submitted with the building application.

(d) The owner is required to hand over 10% of the built-up area in the ground floor or first floor or the second floor, as the case may be, to the sanctioning authority by way of a Notarised Affidavit. In respect of row houses / detached houses / cluster housing 5% of the units shall be handed over by way of notarized affidavit to the sanctioning authority. The Notarised Affidavit shall be got entered by the sanctioning authority

in the Prohibitory Property Watch Register of the Registration Department. Then only the Building sanction will be released.

(e) Individual buildings in plots up to 200sq.m with height up to 7m in respect of Municipal Corporations including Greater Hyderabad Municipal Corporation (GHMC) and 300sq.m with height up to 7m in respect of Municipalities / Nagar Panchyats are exempted from the conditions (c) &(d) above.

26. OCCUPANCY CERTIFICATE:

(a) Occupancy Certificate shall be mandatory for all buildings. No person shall occupy or allow any other person to occupy any building or part of a building for any purpose unless such building has been granted an Occupancy Certificate by the Sanctioning Authority. Partial Occupancy Certificate may be considered by the Sanctioning authority on merits i.e. flats / units or area within a complex which have fulfilled all the requirements in addition to basic facilities like lifts water supply, sanitation, drainage, roads, common lighting etc. However, in respect of individual buildings in plots up to 100sq.m with height up to 7m obtaining Occupancy Certificate is optional.

(b) The owner shall submit a notice of completion through the registered architect and licenced builder / developer along with prescribed documents and plans to the Sanctioning Authority. The Sanctioning Authority or the person authorized, on receipt of such notice of completion shall undertake inspection with regard to the following aspects:

(i) *No. of Floors.

(ii) External setbacks.

(iii) Usage of the building.

(iv) Parking space provision.

(v) Abutting road width

* The total height of the building may vary to a maximum of 1m with no change in the permitted number of floors subject to compliance of fire service norms.

(c) The Sanctioning Authority shall communicate the approval or refusal of the Occupancy Certificate within 15days or may issue the same after levying and collecting compounding fee, if any. If the authority fails to issue the occupancy certificate within the above stipulated period the responsibility shall be fixed with the concerned officer who fails to process the file.

(d) The Sanctioning Authority is empowered to compound the offence in relation to setbacks violations (other than the front setback) in respect of non high rise buildings only up to 10%, duly recording thereon the violations in writing. The rate of Compounding fee shall be equivalent to one hundred percent of the value of the land as fixed by the Registration Department at the time of compounding for the violated portion and the Government may revise this rate from time to time. Compounding of such violation shall not be considered for buildings constructed without obtaining any sanctioned plan.

(e) For all high rise buildings, the work shall be subject to inspection by the Andhra Pradesh State Disasters Response & Fire Services Department and the Occupancy Certificate shall be issued only after clearance from the Andhra Pradesh State Disasters Response & Fire Services Department with regard to Fire Safety and Protection requirements.

(f) The sanctioning authority shall ensure that all public and semi public buildings are constructed disable friendly and provide facilities for specially enabled persons as per National Building Code -2005 of India while issuing occupancy certificate.

(g) The functional/line agencies dealing with electric power, water supply, drainage and sewerage shall not give regular connections to the building unless such Occupancy Certificate is produced, or alternatively may charge 3 times the tariff till such time Occupancy Certificate is produced. This condition shall also be applicable to all unauthorized constructions and buildings constructed without sanctioned building plan. In addition to the above, the Local Body shall collect every year two times the property tax as penalty from the owner / occupier.

(h) The Registration Authority shall register only the permitted built up area as per the sanctioned building plan and only upon producing and filing a copy of such sanctioned building plan. On the Registration Document it should be clearly mentioned that the registration is in accordance with the sanctioned building plan in respect of setbacks and number of floors.

(i) The financial agencies / institutions shall extend loan facilities only to the permitted built up area as per the sanctioned building plan.

27. ENFORCEMENT

(a) In addition to the enforcement powers and responsibilities given in the respective laws of the local authority, in respect of these Rules:

(i) The Enforcement Authority concerned shall be wholly and severally responsible for ensuring and maintaining the right of way / width of the road and building restrictions as given in these Rules.

(ii) The Enforcement Authority shall summarily remove any violation or deviation in building construction in maintaining the road widths and building line.

(iii) In respect of apartment complexes, shopping complexes and all high rise buildings, periodical inspections shall be carried out indicating the stage of work with reference to sanctioned plan. In case of any deviations from the sanctioned plan, necessary action shall be taken as per rules.

(iv) Any person who whether at his own instance or at the instance of any other person or anybody including the Government Department undertakes or carries out construction or development of any and in contravention of the statutory master plan or without permission, approval or sanction or in contravention of any condition subject to which such permission or approval or sanction has been granted shall be punished with imprisonment for a term which may extend to three years, or with fine which may extend to ten percent of the value of land or building including land in question as fixed by the Registration Department at the time of using the land or building. Provided that the fine imposed shall, in no case be less than fifty percent of the said amount.

(b) **Constitution of Town Planning and Building Tribunal:**

The Government shall constitute a Town Planning and Building Tribunal for dealing with all town planning, enforcement and building issues by making necessary amendments to the corresponding Acts if required.

(c) **Constitution of Building Ombudsman:**

The Government may constitute a Building Ombudsman for dealing with all complaints of building violations, shortfall in building standards, services and specifications and safety aspects. The Government shall separately work out the procedure, role and details of the functioning of the Building Ombudsman.

28. LIMITATIONS OF BUILDING SANCTION:

Sanction of building permission by the Sanctioning Authority shall not mean responsibility or clearance of the following aspects:

(a) Title or ownership of the site or building.

(b) Easement Rights.

(c) Structural Reports, Structural Drawings and structural aspects.

(d) Workmanship, soundness of structure and materials used,

(e) Quality of building services and amenities in the construction of building.

(f) Other requirements or licences or clearances required for the site / premises or activity under various other laws.

29. LICENSING OF REAL ESTATE COMPANIES, DEVELOPERS, BUILDERS, TOWN PLANNERS, ENGINEERS & OTHER TECHNICAL PERSONNEL MANDATORY:

(a) The Licencing of Real Estate Companies, Developers & Builders shall be in accordance with the rules as per Annexure – IX.

(b) The Licencing of Architects, Engineers, Supervisor, Surveyor and Structural Engineer & Town Planners shall be as per the Annexure – X.

(c) No developer / builder / real estate firm or company / engineer / town planner/other technical personnel shall be allowed to undertake development/do business / practice in a Municipal Corporation / Urban Development Authority / Municipality / Nagar Panchayat Area unless they are licenced with the sanctioning authority of the respective area.

(d) Architects shall be required to be registered with the Council of Architecture.

(e) The engaging of the services of a licenced developer / builder shall be mandatory for Apartment Buildings, Group Housing, all types of Group Development Schemes, all High-Rise Buildings and all Commercial Complexes.

Developments undertaken for construction of individual residential houses, educational/institutional/industrial buildings and developments undertaken by public agencies are exempted from the above condition.

(f) Any developer / builder undertaking development or any firm doing property business in any Municipal Corporation / Urban Development Authority / Municipality / Nagar Panchayat or soliciting property sale/transactions or advertising as such in case of above, shall necessarily mention the details of it's licence number, licence number of the licenced developer to whom the approval is given by the said Municipal Corporation / Urban Development Authority / Municipality / Nagar Panchayat, together with the permit number and it's validity for information and verification of public / prospective buyers.

(g) Absence of the above or suppressing of the above facts or in the case of other licences and other technical personnel who violate the conditions would invite penal action including debarring of the real estate firm / development firm / company from practice in the local authority area for 5 years besides prosecution under the relevant laws / code of conduct by the sanctioning authority.

(h) Any licenced developer / builder / other technical personnel who undertake construction in violation of the sanctioned plans shall be black-listed and this would entail cancellation of their licence besides being prosecuted under the relevant laws / code of conduct.

B.SAM BOB,
PRINCIPAL SECRETARY TO GOVERNMENT.

SECTION OFFICER.

GREATER HYDERABAD MUNICIPAL CORPORATION			
HYDERABAD DIVISION			
ANNEXURE-I (See Rule-4)			
List of Old/ Existing Built-Up Areas/ Congested Areas/ Settlement/ Gram Khantam/ Abadi			
Sl.No.	**Ward No.**	**Block No.**	**Name of the Lociality / Area**
1	**2**	**3**	**4**
1	13	1, 2, 3	Mustaidpura, Dhulpet, Ziaguda, Mangalhat, Kulsumpura, Karwan
2	14	1 to 22	Dhulpet, Goshamahal, Shahinyathgunj, Chudibazar.
3	16	3 to 9	Chanchalguda, Malakpet, Azampura, Old Malakpet, Dabirpura, Chaderghat
4	17	3 to 8	Saidabad, Rainbazar, Eddibazar, Madannapet, Yakutpura, Kattalmandi
5	18	5 to 9	Bhavaninagar, Riasatnagar, Uppuguda, Sultanshahi, Mirzumla Tank, Aliabad.
6	19	1 to 2	Ghatakanipura, Doodbowli, Fateh Darwaza.
7	20	1 to 7	Ghatakanipura, Doodbowli, Fateh Darwaza.
8	21	1 to 7	Madinabazar, Ladbazar, Petlaburz, Patelmarket, Ghansibazar.
9	22	1 to 8	Sultanpura, Noorkhan Bazar, Purani Haveli.
10	23	1 to 6	Mogulpura, Haribowli etc

SECUNDERABAD DIVISION			
ANNEXURE-I (See Rule-4)			
List of Old/ Existing Built-Up Areas/ Congested Areas/ Settlement/ Gram Khantam/ Abadi			
Sl.No.	**Ward No.**	**Block No.**	**Name of the Lociality / Area**
1	I	3 to 6	Kalasiguda, General Bazar etc.
2	III	1, 2, 3	Avula Mandi, Angreji Bazar.
3	II	1, 4, 5	Ramgopalpet, Market Street
4	VII	1, 2, 3	Monda Market, Ghas Mandi etc.
5	VIII	1 to 3	Sivajinagar, Second Bazar
2. All notified slum areas and EWS Housing areas			
3. Outside Erstwhile M.C.H. Area:			
i			All Village settlements / Abadi areas
ii			Moulali area Jagadgirigutta, Suraram and all other slum areas and EWS Housing areas

HYDERABAD DIVISION			
ANNEXURE-II (See Rule-4)			
List of Areas Prohibited for High Rise Buildings			
Sl. No	**Ward No.**	**Block No.**	**Name of the Locality / Area**
1	**2**	**3**	**4**
1	1	3 to 9	Kavadiguda, Bholakpur, Bakaram, Musheerabad, Zamistanpur, Azamabad, Bagh Lingampally, Ramnagar, Adikme
2	2	1, 2 & 4	Nallakunta, Shankermath, Bagh Amberpet, Golnaka Vidyanagar, Tilaknagar.
3	3	1 to 5	Nimboliadda, Lingampally, Old M.L.A. Quarters, Qutbiguda.
4	4	2, 4, 6, 8.	Gowliguda, Sultanbazar.
5	5	1 to 3 5 to 8	Koti, Jambagh, Troopbazar. Malakunta, Goshamahal, Agapura, Mangalhat, Kazani Hospital.
6	6	2 3	Part Chintalbasti &, Khairtabad. Punjagutta
7	7	1	Ameerpet
8	10	1, 4, 5	2nd Lancer, Humayun Nagar, Ahmednagar, Masab Tank, Chintalbasti Part.
9	11	1 to 4	Mallepally, Bazarghat, Niloufer Hospital Shantinagar
10	12	1	Mehdipatnam, Guddimalkapur, Asifnagar.
11	15	1 to 5 7 to 9	Afzalgunj, Begumbazar, Bus Depot, Osmanshani, Fheelkhana.

SECUNDERABAD DIVISION
ANNEXURE-II (See Rule-4)
List of Areas Prohibited for High Rise Buildings

Sl. No	Ward No.	Block No.	Name of the Locality / Area
1	**2**	**3**	**4**
1	IV	1 to 6	Chitrani Theatre/Hill Fort area
2	V	1	James Street.
3	VIII	2, 3, 4, 5, 6	Bansilalpet, Boiguda, Kavadiguda.
4	IX	2 and 3	Regimental Bazar.
5	X	1, 3, 5	Marredpally, Tukaram Gate, East Maredpally.
6	XI	1 to 4	Sitapalmandi, Chilkalguda, Parsigutta.
7	XII	1, 2, 5, 8 & 10	Lalapet, Lalaguda, Boudhanagar, Malkajgiri Municipality, Chandanagar, Lingampally, Kukatpally APHB Phase I & II, Kamalanagar and Khusaiguda
In Erstwhile MCH Area (Except plots abutting 30 M and above roads – this condition will not be applicable to the areas mentioned at S.No.3 below)			
a			All Areas Mentioned in Annexure I.
b			Secunderabad Area **Ward Nos. I,(P) Blocks 1,2,3,4,5,6&7. Wards II, III, IV** Complete.
c			Banjara Hills-Jubilee Hills Area and Areas **Ward No. 8 Blocks 1, 2 and 3 (Part).**
d			**Ward Nos. 4, 5, 11, 14 and 15 (Complete).**
e			**Ward Nos. 1 and 7 and 8 (Complete).**
f			**Ward No. 3 Block No. 2, 3 and 4.**
g			Area around Charminar covered by **Ward Nos. 20, 21, 22 and 23 Complete.**
h			Falaknuma Area Covered by **Ward No. 19 Block No. 4.**
I			Golconda Fort Area covered by **Ward No. 9 Block Nos. 1, 2, 3, 4, 6, 8, 10 and 11 (Complete).**
j			Asmangadh Area covered by **Ward No 16 Block No 2**
Outside Erstwhile MCH Area			
A			All Village Settlement Areas.
B			Areas Covered by G.O.Ms.No.111 MA, dated 08.03.1996 (Protection of Catchment areas of Osmansagar and Himayatsagar lakes)
C			1 km from the Boundary of Proposed International Airport, Shamsabad
			1 km from boundary of all Defense Airports and Defense Establishments
4. SKY SCRAPER ZONE			
			The Minimum Height of Buildings permissible in this Zone is 12 floors (36m) and above.
			The Minimum Plot Size shall be 4000 Sq.m and the minimum approach road shall be 24m
Areas permissible for Sky Scraper Zone (as per HUDA/HADA/CDA Master Plan):			
I			All along the Inner Ring Road outside Erstwhile MCH limits.
II			Along River Musi outside Erstwhile MCH limits as per special regulations of HUDA.
III			Gachi Bowli – Raidurg – Khajaguda - Manikonda Area.
IV			South of International Airport – Mankhal - Bagh Mankhal – Harshagudem Area.
V			APHB Singapore Township – Rampally- Ghatkesar.
VI			Kollur – Edulanagupallii – Velimella – Nanakramguda - Gopanpalli Area.
VII			Nallagandla –Tellapur Area.
VIII			Miyapur - Aminpur – Sultanpur Area.
IX			All Sites Abutting Proposed 29 Radial Roads outside Erstwhile MCH limits as per special regulations of HUDA.
X			All along the Outer Ring Road up to a depth of 500 meters on either side in areas other than those covered in G.O.Ms.No.111 MA, dated 08.03.1996.
XI			1 km radius from MMTS Stations located in areas other than in areas listed at 2 in Annexure II.

GADWAL MUNICIPALITY			
ANNEXURE-I (See Rule-4)			
List of Old/ Existing Built-Up Areas/ Congested Areas/ Settlement/ Gram Khantam/ Abadi			
Sl.No.	**Ward No.**	**Block No.**	**Name of the Lociality / Area**
1	**2**	**3**	**4**
1	2		Sunkulamma Mettu
2	11,18		Momin Mahalla, Chinna Harijanawada, kista Reddy Banglow
3	9,10		Kuntaveedi
4	11		Vadlaveedhi
5	26		Gantageri
6	13,17		Chittariveedhi
7	7,9		Chintalpe
8	19,20		Camel Street
9	21,24		Telugupet
10	14,15,16		Burdapet
11	1,2		Ganjipet
12	20		B.C.Colony
13	18		Hatkarpet
14	11		Vaddeveedhi
15	22,23		Momin Mahalla
16	14		Rathiburju
17	25		Raghavendra Colony
18	26		Dharurmettu
19	24		Ramnagar

ANNEXURE-II (See Rule-4)			
List of Areas Prohibited for High Rise Buildings			
Sl. No	**Ward No.**	**Block No.**	**Name of the Locality / Area**
1	**2**	**3**	**4**
1			All areas as per Annexure-I

JADCHERLA MUNICIPALITY			
ANNEXURE-I (See Rule-4)			
List of Old/ Existing Built-Up Areas/ Congested Areas/ Settlement/ Gram Khantam/ Abadi			
Sl.No.	**Ward No.**	**Block No.**	**Name of the Lociality / Area**
1	**2**	**3**	**4**
1	2	2-1	Patha Bazar
2	3	3-1	Patha Bazar,Shivalayam
3	4	4-1	Harijan Wada
4	4&5	5-1	Harijan Wada,Chakali geri
5	5&6	6-1	Old Bus stand Area
6	6	7-1	Old Bus stand Area
7	7	8-1	Jama Mjid Area
8	7&8	9-1	Chaithanya nagar

ANNEXURE-II (See Rule-4)			
List of Areas Prohibited for High Rise Buildings			
Sl. No	**Ward No.**	**Block No.**	**Name of the Locality / Area**
1	**2**	**3**	**4**
1			All areas as per Annexure-I

KOLLAPUR MUNICIPALITY			
ANNEXURE-I (See Rule-4)			
List of Old/ Existing Built-Up Areas/ Congested Areas/ Settlement/ Gram Khantam/ Abadi			
Sl.No.	**Ward No.**	**Block No.**	**Name of the Lociality / Area**
1	**2**	**3**	**4**
1	1	1,2	Chowni Veedhi Area, Tholla Veedhi Area, Naga Chatti Rice Mill Area except on R & B Court Road South side.
2	2	3/part	Venkateshwara Talkies Colony, Indira Colony part, except south side of Raja Palace Road.
3	3	3 Part & 4	B.C. Colony, Indira Colony Part, Jameen Gadda Area
4	4	5, 6 / Part	Voridya, Anjaneya Temple Area, RID College Area, except on R & B main road both sides pentavelly road.
5	5	6 / Part, 7 & 8	Voridya Part, MDO Office area, Police Station Area, except on R & B main road both sides.
6	6	9 Part	Madhava Swamy Temple area, Jangalla Colony, except on R & B main road both sides Nagarkurnool road.
7	7	9 Part, 10, 11/part	Santha Bazar Area, Raja Palace Area, Bus stand area, Gandhi High School Road, except both the sides of R & B Road, Santha Bazar Road, Raja Palace Road west side
6	8	11 / Part, 12, 13	Court Road Area, Telugu Veedhi Area part, Santha Bazar Area part, except on both sides of Santha Bazar & R&B Road
9	9	14, 15	Bust Stand left side area, Telugu Veedhi Area part, Ranga Das Area part, S.C. Colony Part
10	10	16, 17 & 18	S.C. Chukkaipally Colony, S.C. Old Harizan Vada, S.C. Ambedkar Nagar, Ranga Dasa Veedhi part
11	11	19, 20 & 21	Ranga Dasu Veedhi Part, Jarry Veedhi Part
12	12	22, 23 & 24/Part	Tharru Veedhi, Chakal Veedhi area, Raja Veedhi Area part
13	13	24 / Part, 25 & 26	Amaragiri Colony, Sri Krishna Colony, Chowni Veedhi Colony
14	14	1,2,3	Choutabetla
15	15	1,2,3	Narasingapuram & Narasinga Rao Pally
16	16	1,2,3,4,5,6	Chukkaipally
17	17	1,2/Part, 3/Part, 4/Part,	Yellur
18	18	1,2/Part, 3/Part, 4/Part, 5 & 6	Yellur
19	19	7	S.C. Colony Yellur, Amaragiri, Chenchu Gudiselu & Bodabanda Tanda
20	20	8	Anjanagiri, Bollaram, Sunnap Thanda & Vodde Gudiselu

ANNEXURE-II (See Rule-4)			
List of Areas Prohibited for High Rise Buildings			
Sl. No	**Ward No.**	**Block No.**	**Name of the Locality / Area**
1	**2**	**3**	**4**
1			All areas as per Annexure-I

MAHABUBNAGAR MUNICIPALITY			
ANNEXURE-I (See Rule-4)			
List of Old/ Existing Built-Up Areas/ Congested Areas/ Settlement/ Gram Khantam/ Abadi			
Sl.No.	**Ward No.**	**Block No.**	**Name of the Lociality / Area**
1	**2**	**3**	**4**
1	1	1	Mothinagar excluding the sites abutting to Nawabpet Road
2	1	2 (Part)	Christian Colony
3	1	3 (Part)	Saddal Gundu
4	1	5 (Part)	Babu Jagjeevan Ram Nagar excluding the sites abutting to Hyd to Raichur Road
5	1	5 (Part)	Ambedkar Nagar excluding the sites abutting to Hyd to Raichur Road
6	1	6 (Part)	Paulsabgutta Slum area
7	1	7 (Part)	Old Garden (Patha Thaota) excluding the sites abutting to Tandoor Road
8	1	7 (Part)	Monappa Gutta
9	1	7 (Part)	Hanuman Nagar & Kothacheruvu Road Slum (Jhansi Nagar) excluding the sites abutting to Kotha cheruvu Road
10	1	7 (Part)	Nalbowli, & T.D.Gutta (Partly) excluding the sites abutting Tandoor Road
11	1	8 (Part)	T.D.Gutta (Partly) excluding the sites abutting to Tandoor Road
12	1	9 (Part)	Sanjay Nagar (Vanagutta) excluding the sites abutting to 80'-0" Wide M.P. Road
13	1	10 (Part)	Shashabgutta excluding the sites abutting to Shashab gutta Main Road & B.K. Reddy Colony Road
14	2	1 (Part)	Kommugeri excluding the sites abutting to Hyderabad-Raichur Road
15	2	2 (Part)	Kidwaipet excluding the sites abutting to Station Road
16	2	3, 4 & 5 (Part)	Vepurigeri excluding the sites abutting Municipal Office Road.
17	3	1,2,11,12 & 13	Veerannapet, Sapai Geri, Mecca Masjid, Yerramungutta excluding the sites abutting to Vekatapur Road
18	3	3, 4 & 5	Madina Masjid, Bharath Talkies Area, Kummariwada excluding the sites abutting to Bharath Talkies Road & Venkatapur Road
19	3	6, 7, 8, 9 & 10	Ravindra Nagar,Gandhi Nagar excluding the sites abutting to Hyderabad - Raichur Road, Venkatapur Road and DMHO Road.
20	4	1 & 2	Ramaiah bowli excluding the sites abutting to Hyderabad- Raichur Road, Bhoothpur Road & Pedda Cheruvu Road
21	4	3,4,5,6,7, 8,9,10&11	Ramnagar,Brahmanwadi,Kisan nagar,Bandlageri, excluding the sites abutting to Hyderabad - Raichur Road, Venkatapur Road and I-Town to Bashabowli Road
22	5	1 (Part)	Vallabhnagar excluding the sites abutting to Hyderabad - Raichur Road and Bashabowli Road
23	5	4 (Part)	Mekala Banda excluding the sites abutting to Bhoothpur Road
24	5	6 (Part)	Telugugeri excluding the sites abutting to Bhoothpur Road
25	5	5, 6 (Part),7/P, 8,9,10, 11&12	Old Palamoor excluding the sites abutting to Bhoothpur Road
26	5	13 (Part)	Polythenic Area
27	6	1 (Part)	Ganesh Nagar (Partly)
28	6	3 & 4 (Part)	Hanumanpura excluding the sites abutting to Raichur Road
29	7	1 & 2	New Premnagar
30	8	4 (Part)	Waddera Basthi

ANNEXURE-II (See Rule-4)			
List of Areas Prohibited for High Rise Buildings			
Sl. No	**Ward No.**	**Block No.**	**Name of the Locality / Area**
1	**2**	**3**	**4**
1			All areas as per Annexure-I

NAGARKURNOOL MUNICIPALITY			
ANNEXURE-I (See Rule-4)			
List of Old/ Existing Built-Up Areas/ Congested Areas/ Settlement/ Gram Khantam/ Abadi			
Sl.No.	**Ward No.**	**Block No.**	**Name of the Lociality / Area**
1	**2**	**3**	**4**
1	8	13	Market Area
2	6	11	Rythu Bazar
3	2,17,18	4,5,21	Santha Bazar
4	13	15	Bus Stand
5	1	1,2,26	Edhamma gudi area
6	2	3,4,5	Chakalgeri, Malageri
7	4	8,9,10	Pulla reddy hospital road, Ramnagar Colony(part)
8	15	18	Sanjaynagar colony
9	16	18 (part)	Papainagar colony
10	18	21, 19 (part), 20(part)	Mahbubsubani Area
11	17	19 (part), 20	Dommargeri, Chenchugeri
12	19	23,24	Ambedhkhar colony,Bodrai Area
13	20	26	Gollageri, Edhammagudi
14	3	6,7(part)	Aradgeri Area, Kothacheruvu Area.

ANNEXURE-II (See Rule-4)			
List of Areas Prohibited for High Rise Buildings			
Sl. No	**Ward No.**	**Block No.**	**Name of the Locality / Area**
1	**2**	**3**	**4**
1			All areas as per Annexure-I

NARAYANPET MUNICIPALITY			
ANNEXURE-I (See Rule-4)			
List of Old/ Existing Built-Up Areas/ Congested Areas/ Settlement/ Gram Khantam/ Abadi			
Sl.No.	**Ward No.**	**Block No.**	**Name of the Lociality / Area**
1	**2**	**3**	**4**
1	6	1-7	Bapunagar
2	2	2-8	Gandhinagar
3	3 & 4	2-6	Singarbase
4	1 & 3	2-1, 2-2, 2-4 & 2-5	Agraharpet
5	19 & 20	3-1, 3-2, 3-3, 3-4, 3-15 & 3-16	Dhobiwada
6	18	3-5	Kasabwada
7	21	3-8, 3-10, & 3-11	Lal Masjid, Darga
8	22	3-9 & 3-12	Baharpet
9	5	1-3 & 1-4	Hazikhanpet
10	14 & 15	5-2 & 5-3	Palla Harijanwada
11	14	5-4, 5-5 & 5-6	Palla Malawada
12	16	5-1 & 3-6	Palla Parimalapuram
13	10 & 9	4-6, 4-7 & 4-8	Market Area
14	10	4-9 & 4-10	Medar Wada
15	13	4-11	Linewada
16	1	2-7	Perapalla Base
17	8	1-6	Ashok Nagar
18	7	1-7	B.C.Colony

ANNEXURE-II (See Rule-4)			
List of Areas Prohibited for High Rise Buildings			
Sl. No	**Ward No.**	**Block No.**	**Name of the Locality / Area**
1	**2**	**3**	**4**
1			All areas as per Annexure-I

SHADNAGAR MUNICIPALITY			
ANNEXURE-I (See Rule-4)			
List of Old/ Existing Built-Up Areas/ Congested Areas/ Settlement/ Gram Khantam/ Abadi			
Sl.No.	**Ward No.**	**Block No.**	**Name of the Lociality / Area**
1	**2**	**3**	**4**
1	1	1 & 2	Teachers Colony, Vijayanagar colony, GHR Builders, Asha Colony, Padhmavathi Colony
2	2	2 & 3	Padhmavathi Colony, LNColony, Mallikarjuna Colony
3	3	3,4 & 5	Mallikarjuna Colony, Main Road (Right Side), Shivamaruthi Temple, Keshampet Road (Right Side)
4	4	5 & 6	Keshampet Road (Right Side), Rathan Colony, Vasavinagar
5	5	6,7 & 8	Rathan Colony, DSP Office Back Side, Patel Road (Right Side), Hanuman Temple, Shadnagar Public School
6	6	8,9 & 10	Gunj Back Side, Gunj, Main Road (Left Side up to Canera Bank)
7	7	11 & 12	Kasab Vada, Ram Mandhir Road, Ashok Nagar, Sanjay Naga Colony, Nehru Colony
8	8	12 & 13	Nehru Colony (From Ganesh Theator), Collage Road, Opp. Parameshwari Theator, Kothapet Road,
9	9	13	Srinagar Colony, Christian Colony, Officers Colony, Near Tagore School
10	10	13,14 & 15	Christian Colony (Near Old Registar Office), Gandhi Nagar (Left Side College Road)
11	11	15,16 &17	Gandhi Nagar Colony (NH.7 Right Side, Police Line, Main Road Left Side) Indhra Nagar Colny
12	12	17 & 18	Indhra Nagar Colony, Srinivasa Colony, Shambashiva Colony, RTC Colony
13	13	18	RTC Colony, NGOs Colony, Venkatramana Colony, Ayyappa Colony, Anand Colony, Thirumala Colony, Eeshwar Colony,
14	14	18 &19	Vijayanagar Colony (Sub Station), Vidhyuth Colony, Paradise Colony, Thirumala Colony, Venkateshwara Colony
15	15	19 & 20	Venkateshwara Colony, Ambethkar Colony, Srinivas Nagar Colony
16	16	21,22 &23	Bukka vada, Gandhi Chok, GOVT. Hospetal
17	17	23,24	Venkateshwara Temple, Telugu Garee
18	18	24,25 & 26	Tholla Garee, Ashiyana Hotel Back Side, Gundla Garee
19	19	26, 27 & 28	Gundla Garee, Vivekananda Colony, Govt High School, NearBramham Gari Temple, Kasab vada near Maszeed
20	20	28 & 29	SC Colony, Raithu Colony, Padhmashali Colony

ANNEXURE-II (See Rule-4)			
List of Areas Prohibited for High Rise Buildings			
Sl. No	**Ward No.**	**Block No.**	**Name of the Locality / Area**
1	**2**	**3**	**4**
1			All areas as per Annexure-I

WANAPARTHY MUNICIPALITY			
ANNEXURE-I (See Rule-4)			
List of Old/ Existing Built-Up Areas/ Congested Areas/ Settlement/ Gram Khantam/ Abadi			
Sl.No.	**Ward No.**	**Block No.**	**Name of the Lociality / Area**
1	**2**	**3**	**4**
1	1	8-1 to 8-123; 9-1 to 9-87; 10-1 to 10-105; 11-54 to 11-75; 15-1 to 15-32, 7-119	Raigadda, Telugu wada, Nadimigeri
2	2	5-60 to 5-96/2; 6-1 to 6-110; 7-1 to 7-118; 11-1 to 11-53; 11-76 to 11-100	Chakali veedhi, Mollageri, Brahana veedhi
3	3	5-1 to 5-59; 4-1 to 4-116; 3-1 to 3-151; 2-59 to 2-69; 2-96 to 2-119; 2-121 to 2-124; 2-126 to 2-140	Savaran street, Pinjari geri, Gareeb nagar
4	4	2-1 to 2-58; 2-70 to 2-95; 1-1 to 1-190; 48-1 to 48-68; 27-425 to 27-489; 27-152;2-120,2-125	Kummari geri, Balanagar, Vasya thanda, Indira colony
5	5	27-153 to 27-175/5; 27-236 to 27-424	Gandhinagar
6	6	27-2 to 27-21; 27-33 to 27-44; 27-50 to 27-151; 27-176 to 27-235	Gandhinagar
7	7	26-1 to 26-151/3, 25-44 to 25-106; 27-22 to 27-32; 27-44/1 to 27-49	Gandhinagar, Harijanwada (p)
8	8	25-1 to 25-43; 23-1 to 23-128; 24-1 to 24-107; 22-17 to 22-118	Arabgalli, Patha bazar
9	9	28-1 to 28-111; 29-1 to 29-112; 30-1 to 30-89/1; 47-125 to 47-181	Harijanwada, Megya thanda, Gokam gadda, Nandhimalla gadda
10	10	20-1 to 20-126; 22-1 to 22-16; 21-1 to 21-155; 13-1 to 13-95; 19-110 to 19-123	Pathakota, Hanuman tekdi
11	11	12-1 to 12-88; 14-1 to 14-103; 18-1 to 18-116; 19-1 to 19-109; 30-90 to 3-139/10	Kanchari geri, Mustigeri, High School road (P), Maremma kunta, Mazeed road
12	12	15-33 to 15-95; 16-1 to 16-197; 17-1 to 17-102;44-186,44-186/1,44-187&44-187/1 are deleted from26th ward and included in this ward.	Shanker gunj, Subash wada, Damodar thota
13	13	31-56 to 31-140; 32-1 to 32-85; 33-81 to 33-107 ;33-109 to 33-175	High School road, Swethanagar, Bhagathsingh nagar, Pangalr oad, Thirumala colony
14	17	32-86 to 32-153; 34-37/1 to 34-48; 47-1 to 47-124	Thirumala colony, Peerla gutta, Mettyu pally, Rangam gadda, Redya Thanda
15	26	44-85 to 44-190;44-186,44-186/1,44-187&44-187/1 are deleted from 26th ward and included in this ward.	Ramnagar colony

ANNEXURE-II (See Rule-4)			
List of Areas Prohibited for High Rise Buildings			
Sl. No	**Ward No.**	**Block No.**	**Name of the Locality / Area**
1	**2**	**3**	**4**
1			All areas as per Annexure-I

GAJWEL MUNICIPALITY			
ANNEXURE-I (See Rule-4)			
List of Old/ Existing Built-Up Areas/ Congested Areas/ Settlement/ Gram Khantam/ Abadi			
Sl.No.	Ward No.	Block No.	Name of the Lociality / Area
1	2	3	4
1		1-1 to 1-131, 2-1 to 2-100, 3-1 to 3-67/2, 8-72 to 8-100	Kyasaram & Annapurna Rice Mill Area
2		16-1 to 16-117	Raji Reddy Pally colony
3		4-36 to 4-100, 6-1 to 6-75, 5-1 to 5-100	Thimmakpally & Pregnapur
4		7-1 to 7-100, 8-1 to 8-100, 9-1 to 9-80, 10-1 to 10-45	Kodandarampally
5		9-80/1 to 9-100, 11-1 to 11-68, 2-69 to 2-100, 4-1 to 4-35	Pregnapur, Gundannapally, SC colony, Pregnapur
6		1-1 to 1-100, 2-1 to 2-68, 1-1 to 1-100, 2-1 to 2-62/1, 3-1 to 3-100	BC Colony, Pregnapur, Mutrajpally Old Village
7		4-35 to 4-100, 5-1 to 5-48, 17-1 to 17-80	Sangapur Old Village
8		8-1 to 8-57, 7-60 to 7-200, 7-1 to 7-59, 13-1 to 13-200, 14-1 to 14-200, 15-1 to 15-200	Pidche road Gajwel Old Abadi Gajwel,Bombay lodge, Gajwel to Old MM Court MPDO Office area to Jame Musgied Old PS Area to Braman vidhi IKP Office area

ANNEXURE-II (See Rule-4)			
List of Areas Prohibited for High Rise Buildings			
Sl. No	Ward No.	Block No.	Name of the Locality / Area
1	2	3	4
1			All areas as per Annexure-I
2		9-161 to 9-168/5, 9-165/6 to 9-100, 11-84/7 to 11-84/6	Dhanalaxmi Colony, Back side area Gajwel, Ellite Colony Pregnapur
3		3-1 to 3-100, 11-69 to 11-100, 7-58 to 7-88, 6-23 to 6-100, 7-1 to 7-58/1	Osman Colony, Pregnapur, Balaji & Sri Enclave, Laxmi Prasanna Colony, Mutraj Pally, Shivalayam Colony, Vasavi nagar, Mutrajpally
4		12-1 to 12-200	Auaquaf Colony

MEDAK MUNICIPALITY			
ANNEXURE-I (See Rule-4)			
List of Old/ Existing Built-Up Areas/ Congested Areas/ Settlement/ Gram Khantam/ Abadi			
Sl.No.	Ward No.	Block No.	Name of the Lociality / Area
1	2	3	4
1	1	12	Jambikunta Harijanwada
2	1	3	Ramnagar
3	1	11	Narsikhed
4	3	9	Waddera Colony & Yerrola Colony
5	1	10	Ambedker Colony

6	1	10	Golkonda
7	3	8	Koligadda
8	1	8	Pildiddi
9	1	7	Brahman Street
10	3	1	New Market
11	3	2	Arabgally
12	3	3	Kummari Gadda
13	3	6	Big Bazar
14	3	4	Rangaraj Gally
15	3	5	Puchakayala Gadda &Choti Dharga
16	3	6	Nawabpet
17	2	7	Jilanigadda
18	2	4	Pitlambase
19	2	5	Adibasthi
20	2	8	Barahimam
21	1	1	Fathenagar
22	2	10	Dayara

ANNEXURE-II
(See Rule-4)

List of Areas Prohibited for High Rise Buildings

Sl. No	Ward No.	Block No.	Name of the Locality / Area
1	**2**	**3**	**4**
1			All areas as per Annexure-I
2	3	6	Nawabpet
3	3	4	Rangarajpally
4	1	10	Golconda
5	1	11	Narsikhed
6	3	2	Arabgally
7	3	3	Kumarigadda
8	2	6	Big Bazar
9	1	7	Brahman Street
10	2	4	Pitlambase
11	3	8	Koligadda
12	2	5	Adibasthi
13	1	2	Jambikunta

SADASIVAPET MUNICIPALITY			
ANNEXURE-I (See Rule-4)			
List of Old/ Existing Built-Up Areas/ Congested Areas/ Settlement/ Gram Khantam/ Abadi			
Sl.No.	**Ward No.**	**Block No.**	**Name of the Lociality / Area**
1	**2**	**3**	**4**
1	1	1/1/2001	Shviapuri Colony
2	1	1/5/2001	Harijanawada
3	1	1/5/2001	Pedda Harijanawada
4	1	1/6/2001	Agriculture market committee area
5	2	2/1/2001	Potti Sriramulu Nagar Colony
6			Nandikandi Base
7	2	2-2-1 & 2-3-1	Gollakeri & Pittalakeri
8	3	3-4-1 & 3-7-1	Hatkerpet & Bichubkeri
9	4	4/7/2001	Kohir Base, Ravindra Nagar Colony
10	4	4/8/2001	PSML Labour Colony
11	4	4-1-1 to 4-6-1	Chapalakeri, Prabhu Mandir, Ram Mandir, Pathakeri & Eshwar Mandir Area
12	5	5-1-1 to 5-4-1	Siddapur Harijanawada
13	5	5/5/2001	Siddapur Weaker Section Housing Colony
14	1, 2 & 3	1-3-1 & 1-4-1, 2-4-1, 2-6-1, 2-7-1 & 3-1-1	Gandhi Chowk, Thilak Road, Subash Road, Shastri Road, Jalagari keri, Lopalikota,

ANNEXURE-II (See Rule-4)			
List of Areas Prohibited for High Rise Buildings			
Sl. No	**Ward No.**	**Block No.**	**Name of the Locality / Area**
1	**2**	**3**	**4**
1			All areas as per Annexure-I

SIDDIPET MUNICIPALITY			
ANNEXURE-I (See Rule-4)			
List of Old/ Existing Built-Up Areas/ Congested Areas/ Settlement/ Gram Khantam/ Abadi			
Sl.No.	**Ward No.**	**Block No.**	**Name of the Lociality / Area**
1	**2**	**3**	**4**
1	1		Baraimam
2	2		Parupallay, Vigatable market area, Kaman Raod, Old vishya bank area
3	3		Parupally part, Dobhi gally
4	4		Kaman main road, Parupalay street part, Dhobi wada part
5	5		Parupallay street, Line Gadda
6	7		Kummari wada, Boya wada, Ambedkar nagar
7	12		Boya wada, Patel pura part, Sunar gally
8	13		Patel pura, Sher pura, Subash road
9	11		Ambedkar nagar, Patelpura part, Karimnagar road left side
10	14		Sherpura, Patelpura, Chinna masid, Subash road, Burju line, Kanchari Bazar
11	16		Kanchari bazaar, Near Gandhi Chowk, Uma bhavan Road
12	15		Moin pura, Old SBI Area, Gandhi Chowk Part, Charwadhan Part
13	31		Charwadhan, Girls College area
14	32		Bara imam, Nasarpura, Erra Chervuarea
15	6 part	1	Vivekanada Colony part
16	8		Sanjeevaianagar
17	9		Harajanawada (Ambedkarnagar) Sajidpura part

ANNEXURE-II (See Rule-4)			
List of Areas Prohibited for High Rise Buildings			
Sl. No	**Ward No.**	**Block No.**	**Name of the Locality / Area**
1	**2**	**3**	**4**
1			All areas as per Annexure-I
2	6part		Vivekanada Colony part
3	10		Sajidpura Srinivasnagar Part
4	17		Barathnagar Shivajinagar
5	18		Barathnagar
6	19		Barathnagar
7	20		Barathnagar Erukulawada
8	21		Barathnagar
9	22		MoinpuraBarathnagar
10	23		Ganeshnagar part Moinpura
11	24		Ganeshnagar part Vidyanagar
12	25		Vidyanagar Colony Ganeshnagar part
13	26		Moinpura Medak road Murshadgadda
14	27		Khadarpura Saraswathinagar
15	28		Khadarpura Maheswaramnagar Saraswatinagar part Narasapura part
16	29		Narsapura
17	30		Narsapura

ZAHEERABAD MUNICIPALITY			
ANNEXURE-I (See Rule-4)			
List of Old/ Existing Built-Up Areas/ Congested Areas/ Settlement/ Gram Khantam/ Abadi			
Sl.No.	**Ward No.**	**Block No.**	**Name of the Lociality / Area**
1	**2**	**3**	**4**
1	1	1-1, 1-2 (Part)	Manik Prabhu Mohilla, Panduranga Mohilla (Part)
2	1	1-2, 1-3 (Part), 1-4	Lalsab Mohilla
3	1	1-3	Khan Mohilla (Part)
4	2	2-2	Subash Gunj(excluding the sites abutting to main roads)
5	2	2-4	Bagareddy Pally(excluding the sites abutting to main roads)
6	3	3-5, 3-3	Rachannapet(part), Aryanagar(part) (excluding the sites abutting to NH-9)
7	3	3-6	Sriram Mohilla
8	3	3-3, 3-4	Arya Nagar, Momin Mohilla(excluding the sites abutting to NH-9)
9	3	3-1, 3-2	Gadi(Part), Ahmed Nagar
10	4	4-4, 4-5(Part)	Gadi Harijanawada, Gadi
11	4	4-1, 4-2, 4-3	Bashweswara Mohilla, Watan Bagh
12	5	5-1, 5-2, 5-3	Shanthi Nagar(Part) (Excluding the sites abutting to 60'-0" M.P.road)

ANNEXURE-II (See Rule-4)			
List of Areas Prohibited for High Rise Buildings			
Sl. No	**Ward No.**	**Block No.**	**Name of the Locality / Area**
1	**2**	**3**	**4**
1			All areas as per Annexure-I

SANGAREDDY MUNICIPALITY			
ANNEXURE-I (See Rule-4)			
List of Old/ Existing Built-Up Areas/ Congested Areas/ Settlement/ Gram Khantam/ Abadi			
Sl.No.	**Ward No.**	**Block No.**	**Name of the Lociality / Area**
1	**2**	**3**	**4**
1	3	2-2	Madhava Nagar
2	8	1-21-3	Maruthi Nagar
3	7		Sri Nagar
4	12	6-2	Uppar Bazar
5	4	2-1	Bhavani Nagar
6	8	1-2	S.C.Colony, Neche Bazar
7	9	1-5	Erukalawada
8	9		Block No.3, S.C/B.C.Colony
9	2	2-4	Beside Jail
10	2	2-5	S.C.Colony Slaughter house
11	1		Roi – ka – talab
12	31	32	Bhagath singh Nagar
13	31	33	L.B. Nagar
14	30	3-33-4	S.C.Colony New Baba Nagar beside Police colony
15	30		S.C.Colony Baba Nagar
16	11	6-1	Block No.9
17	12	6-2	Gandhi Nagar
18	14	6-4	Block No.13, Ward No.17
19	30	3-4	S.C.Colony F.R.S
20	16	5-6	Riksha colony
21	16	5-7	Maqdoom Nagar
22	15	6-5	S.C/B.C Colony 13, Someshwarwada
23	29	4-1	S.C./B.C Colony W/21 Rajampet
24	29	3-4	Rajampet
25	25	4-2	Rajampet S.C Colony
26	27	4-9	Vijay Nagar colony
27	26	4-3	Vaddera colony ward No.19
28	25	4-2	Indira colony ward No.19
29	25	4-2	Gale Pochamma
30	25	4-5	Ramachararedy colony
31	21	5-1	Sanjeeva Nagar colony
32	21	5-8	Marks Nagar colony
33	21	5-8	Narayan reddy colony
34	19	5-8	Kalwakunta

ANNEXURE-II (See Rule-4)			
List of Areas Prohibited for High Rise Buildings			
Sl. No	**Ward No.**	**Block No.**	**Name of the Locality / Area**
1	**2**	**3**	**4**
1			All areas as per Annexure-I

HUZUR NAGAR MUNICIPALITY			
ANNEXURE-I (See Rule-4)			
List of Old/ Existing Built-Up Areas/ Congested Areas/ Settlement/ Gram Khantam/ Abadi			
Sl.No.	**Ward No.**	**Block No.**	**Name of the Lociality / Area**
1	**2**	**3**	**4**
1			Mulkalapalli Seethaiah Bazar
2			Huzurnagar Old Grama Kantam
3			Thilak Nagar
4			Old Yadav Bazar
5			N.T.R. Colony

ANNEXURE-II (See Rule-4)			
List of Areas Prohibited for High Rise Buildings			
Sl. No	**Ward No.**	**Block No.**	**Name of the Locality / Area**
1	**2**	**3**	**4**
1			All areas as per Annexure-I

KODAD MUNICIPALITY			
ANNEXURE-I (See Rule-4)			
List of Old/ Existing Built-Up Areas/ Congested Areas/ Settlement/ Gram Khantam/ Abadi			
Sl.No.	Ward No.	Block No.	Name of the Lociality / Area
1	2	3	4
1	1	1	Brahmam Gari Gudi Bazar
2	1	1	Kotireddy Gari Veedhi
3	1	1	Kirocin Bunk Bazar
4	1	1	J.V.S. Bazar
5	1	1	Appaiah Gari Veedhi
6	1	1	T.N.Babu Bazar
7	1	1	L.G.Resturent Bazar
8	1	1	Dr.Srinivasa Reddy Hospital Bazar
9	2	2	Dr.Guravaiah Gari Hospital Bazar
10	2	2	Thakdheer Hotel Bazar
11	2	2	Varthaka Sangham Bazar
12	2	2	State Bank Bazar
13	3	2	Saikrishna Theatre Bazar
14	3		Krishnareddy Hospital Bazar
15	3	3	High School Venuka Bazar
16	4,5,6,7	3	Ananthagiri Road (Gutta & Nayanagar)
17	11	6(Part),7(Part)	Harijanawada Area
18	10	5(Part),6(Part)	Muslim Bazar Area
19	11	8(Part),9(Part), 10(Part)	Bodrai Bazar Area
20	11,12,13	11(Part),2(Part), 13(Part)	Yadav Nagar toRanga Theatre Backside Area,
SLUMS			
1	3	2(Part),3(Part)	Cheruvukatta Bazar
2	3,4	3(Part)	Kastalla Gadda Area
3	9	5(Part)	Mathana Area
4	14	11(Part)	Ambedkar Colony
5	11	7(Part)	Harijanawada Area,Saibaba Temple Area
6	19	13(Part),14(Part)	Srirangapuram Area SC Colony
7	19	15	Laxmipuram Area
8	19,20	16(Part),17(Part)	Balajinagar Area
9	17	12	Babunagar Area
10	17,18	12(Part)	Salarjungpeta Area
11	1	1(Part)	Ramireddy Palem Old Area

ANNEXURE-II (See Rule-4)			
List of Areas Prohibited for High Rise Buildings			
Sl. No	Ward No.	Block No.	Name of the Locality / Area
1	2	3	4
1			All areas as per Annexure-I
2	5,5	3(part)	Nayanagar
3	11,12	8(part), 9(part), 10(part)	Bodrai Bazar
4	13,14	11(part)	Azad Nagar(part)
5	1,2,3,4	1(part), 2(part), 3(part)	In between Old NH-9-Cheruvu

MIRYALGUDA MUNICIPALITY			
ANNEXURE-I (See Rule-4)			
List of Old/ Existing Built-Up Areas/ Congested Areas/ Settlement/ Gram Khantam/ Abadi			
Sl.No.	**Ward No.**	**Block No.**	**Name of the Lociality / Area**
1	**2**	**3**	**4**
1		5-1 Part, 6-1 part	Shabu nagar
2		3-1 to 3-240, 4-1 to 4-183	Gandhi Nagar
3		1-1 Part	Rama theatre area
4		30-1 part	Edulaguda
5		28-1 part	Sunder nagar
6		25-1 part	Kalalwada
7		20-1 part, 21-1 part, 22-1 part, 23-1 part, 24-1 part	Islampura, doctors Colony Main bazar & Kundalabazar
8		19-1 part	Vinobha nagar
9		34-1 part	Bapuji Nagar
10		35-1 Part	Prakash Nagar
11		8-1 part, 9-1 Part, 10-1 part, 11-1 Part, 12-1 Part, 13-1 Part, 14-1 Part	Seetharampuram
12		7-1 Part	Bangariguda
13		33-1 part	Edukotlathanda

ANNEXURE-II (See Rule-4)			
List of Areas Prohibited for High Rise Buildings			
Sl. No	**Ward No.**	**Block No.**	**Name of the Locality / Area**
1	**2**	**3**	**4**
1			All areas as per Annexure-I

NAKREKAL MUNICIPALITY			
ANNEXURE-I (See Rule-4)			
List of Old/ Existing Built-Up Areas/ Congested Areas/ Settlement/ Gram Khantam/ Abadi			
Sl.No.	**Ward No.**	**Block No.**	**Name of the Lociality / Area**
1	**2**	**3**	**4**
1	1-1	1-174	Thipparthy Road, Except structures abutting to R&B Road
2		2-235/1	Thatikal Road, except structures abutting to R&B road
3		3-180	Thatikal road, chek dyam, except structures abutting to R& B road
4		4-168/1	Anjaneyuni gudi
5		5-112	Bodrai Bajar
6		6-129/2	Except structures abutting to R & B Road (No.H.9)
7		7-152	Kanakadurga Temple area except abutting to R&B Road (N.H.9)
8		8-139/9	Musi road except structures abutting to R&B Road
9		9-138/1	Musi road except structures abutting to R&B Road
10		10-48/4	Shivajinagar SC Hostel Back side
11		11-180	Shivajinagar
12		12-170	Santhosh Nagar except structures abutting to R&B Road
13		13-140/4	Patel Nagar except structures abutting to R&B road
14		14-99	Venkateshwara Temple area
15		15-202/2	VT Colony, Rahmathnagar
16		16-191/2	Katamaiah bazar
17		17-294/A	Cheemala gadda except structures abutting to Thipparthy road
18		19-220	Vasavi Nagar except structures abutting to R&B Road
19		20-163/2	Market road SLB C Road except structures abutting to Kadaparthy road
20		21-136/1	Market Road , Sundaraiah bazar except structures abutting Kadaparthy road
21		22-49	Babasahed gudem
22		23-88	Babasahed gudem
23		1-100	BC Locality except structures abutting to R&B Road
24		2-100/1	Grampanchayat Office, except structures abutting to R&B Road
25		3-97/1	Old SC Colony except structures abutting to R&B Road
26		4-100/2	BC Locality except structures abutting to R&B Road
27		5-96	NEW SC Colony except structures abutting to R&B Road
28		6-62	Mangamma gadda colony, except structures abutting to R& B Road
29		1-100	SC &BC Colony
30		2-103	Middegudem
31		1-119	BC & SC locality except structures abutting to R&B Road
32		2-104	BC Locality
33		3-134	BC Locality
34		6-48	BC Locality
35		5-114	Grampanchayat Office,
36		6-87	BC Locality
37		7-79	Near ZP High School
38		8-85	Sundaraiah Colony
39		8-125/1	Thota Colony
40		9-181	BC Colony except structures abutting to R& B Road
41		10-169	SC Colony except structures abutting to R& B Road
42		11-86	Keshavari Gudem, Pannalavari gudem, Komati reddy gudem
43		1-97	BC Colony except structures abutting to R& B Road
44		2-100	BC Colony
45		3-100	SC Colony except structures abutting to Road
46		4-101	SC Colony
47		5-101	BC Colony
48		6-100	BC Colony
49		7-100	BC Colony
50		8-101	BC Colony
51		9-80	Maruthinagar except structures abutting to R&B Road
52		10-52	Kandimallavarigudem
53		1-61	BC Colony, except structures abutting to R& B Road
54		2-128	BC Colony, except structures abutting to R& B Road
55		3-108/1	BC Colony, except structures abutting to R& B Road
56		4-78	BC Colony, except structures abutting to R& B Road
57		5-61/1	ST Colony except structures abutting to R& B Road
58		6-64/2	BC Colony

59		7-93	Arlagaddagudem

ANNEXURE-II (See Rule-4)			
List of Areas Prohibited for High Rise Buildings			
Sl. No	**Ward No.**	**Block No.**	**Name of the Locality / Area**
1	**2**	**3**	**4**
1			All areas as per Annexure-I

NALGONDA MUNICIPALITY			
ANNEXURE-I (See Rule-4)			
List of Old/ Existing Built-Up Areas/ Congested Areas/ Settlement/ Gram Khantam/ Abadi			
Sl.No.	**Ward No.**	**Block No.**	**Name of the Lociality / Area**
1	**2**	**3**	**4**
1	1	1-1	SriKrishna Nagar, Mungole Road
2		1-2	SriKrishna Nagar, Shivalayam Area
3		1-3	Malbowli, Near Hanuman Temple
4		1-4	Old JBS
5	2	2-1	New JBS, Madhava NAgara, Jama-e-MAsjid
6		2-2	Mangali wada, Muthyalamma Gudi
7		2-3	Chakaliwada
8		2-4	Pottugadda
9		2-5	Pottugadda, Komati Wada
10	3	3-1	Tulasi Nagar except properties abutting to MP Road 60'-0" wide road PVN theater road(New prem talkies)
11		3-2	Nehru Ganj
12		3-3	Jmmalaguda
13		3-4	Musa Mahela
14		3-5	Musa Mehla
15		3-6	Onti Stambam
16		3-7	Line Wada
17		3-8	Cement Road
18		3-9	Gadi Masjid area, old JBS
19		4-1	KUmmariwada, Panjasha
20		4-2	Cement road, Panjasha
21		4-3	Cement Road
22		4-4	Islampura
23		4-5	Islampura
24		4-6	Akkachalma
25		4-7	Rahman Bagh, RP Road, Akkachelma
26		4-8	Akkachelma
27		4-9	One town area, Old Raithu Bazar, RP road except structures properties abutting to 80'-0" MP road
28		4-10	One town area, Old Raithu Bazar, RP road except structures properties abutting to 60'-0" MP road
29	5	5-1	Tulasi Nagar except properties abutting to 60'-0" wide MP road PVN theater road(new prem talkies)
30		5-2	Sick Wadi except properties abutting to 60'-0" road
31		5-3	Sick Wadi except properties abutting to 60'-0" road
32		5-4	Pyarasab Bagh except properties abutting to 60'-0" RP road
33		5-9	Manyamchalka, Anand Nagar, Manayambai area except abutting to 80'-0" wide MP road Miryalguda
34		5-10	Manyamchalka except abutting to 100' wide MP road DVK road, Dist Jail road(50'-0" Mp road)
35		5-11	Hyderkhanguda
36	7	7-1	Except properties abutting to 50'-0" MP road Pangal area SC locality
37		7-2	Except properties abutting to 50'-0" MP road Pangal area
38		7-3	Except properties abutting to 50'-0" Mp road Pangal area
39		7-4	Except properties abutting to 50'-0" MP road Pangal area
40		7-5	Except properties abutting to 50'-0" MP road Pangal area
41		7-7	Except properties abutting to 50'-0" Mp road Panfal area Waddiriwada
42	8	8-1-300	Gollaguda, except properties abutting to 80'-0" wide Mp road(stadium road)
43		8-1-1083	Sateesh NAgar, except properties abutting to 100'-0: wide Mp road and Govt.Hospital 50'-0" wide Mp road
44		8-2-94 to 82-180	Darushapa colony, except properties abutting to 80'-0" wide Mp road(stadium road)

ANNEXURE-II (See Rule-4)			
List of Areas Prohibited for High Rise Buildings			
Sl. No	**Ward No.**	**Block No.**	**Name of the Locality / Area**
1	**2**	**3**	**4**

1			All areas as per Annexure-I

SURYAPET MUNICIPALITY			
ANNEXURE-I (See Rule-4)			
List of Old/ Existing Built-Up Areas/ Congested Areas/ Settlement/ Gram Khantam/ Abadi			
Sl.No.	**Ward No.**	**Block No.**	**Name of the Lociality / Area**
1	**2**	**3**	**4**
1	4	1-5 & 1-7(PART)	Goundla Bazar & Kummari Bazar
2	9	1-7(part)	Opp.Church Compound
3	10	1-8(PART)	Church Compound
4	11	1-8(part)	Potti Sriramulu centre(part)
5	11	1-9(part)	Gopalpuram(part)
6	12	1-8(part)	Chintalcheruvu
7	12	1-10(part)	Ambedkar Nagar
8	14	3-5(part)	Giri Nagar
9	16	3-5	Kothagudem Bazar
10	17	3-6 t)	Methariwada
11	17	3-7 (Part)	Atukula Bazar
12	19	3-10 (Part)	Rajeev Nagar
13	22	2-7 (Part)	Ambedkar Nagar
14	21	2-7 (Part)	Seetharampuram
15	22	2-6 (Part)	Mutyalamma Temple
16	24	2-4(Part)	Golla Bazar
17	26 26	2-1 (Part)	Chandrannakunta
18	26	2-1 (Part)	Mamillgadda
19	28	1-1 (Part)	Thallagada
20	30	1-1 (Part)	Annadurai Nagar
21	33	1-1 (Part)	Nehru Nagar
22	13	1-9 (Part)	Balaramthanda
23	13	1-11 (Part)	Dubbathanda
24	13	1-9 (Part)	Vasaramthanda
25	15	3-5 (Part)	Jammigadda
26	7	3-6 (Part)	Napariwada
27	17	3-7 (Part)	Mandulawada
28	19	3-10 (Part)	Harijanawada-I
29	22	3-12 (Part)	Erukulawada
30	20-21	3-12 (Part)	Harijanawada-II
31	22	3-11 (Part)	Old Fire Station
32	23	2-7 (Part)	Opp.Afzal Rice Mill
33	27	2-6 (Part)	Magdhumnagar

ANNEXURE-II (See Rule-4)			
List of Areas Prohibited for High Rise Buildings			
Sl. No	**Ward No.**	**Block No.**	**Name of the Locality / Area**
1	**2**	**3**	**4**
1			All areas as per Annexure-I
2	12	1-8(Part)	Chintalcheruvu
3	12	1-10(part)	Ambedkar Nagar
4	14	3-5(part)	Giri Nagara
5	17	3-6(part)	Methariwada
6	17	3-7(part)	Atukula bazaar
7	19	3-10(part)	Rajiv Nagar
8	22	2-7(part)	Ambedkar Nagar
9	21	3-7(part)	Seeta Rampur
10	24	2-4(part)	Golla Bazar
11	26	2-1(part)	Chandrannakunta
12	26	2-1(part)	Mamillagadda
13	17	3-6(part)	Napariwada
14	17	3-7(part)	Mandulawada
15	19	3-10(part)	Harijana Wada-I
16	22	3-12(part)	Erukulawada
17	20-21	3-12(part)	Harijanawada-II
18	22	3-11(part)	Old Fire Station

BHONGIR MINICIPALITY			
ANNEXURE-I (See Rule-4)			
List of Old/ Existing Built-Up Areas/ Congested Areas/ Settlement/ Gram Khantam/ Abadi			
Sl.No.	Ward No.	Block No.	Name of the Lociality / Area
1	2	3	4
1	1	1	Tagore Road, Ambedkar Nagar, Sriram Nagar, Urban Colony (except House numbers abutting to Hyd-Hnk road)
2	1	5	Part of Hyd-Hnk road, SLNS Degree College area, Shruthi Nagar, Jakkaiah Nagar (except House numbers abutting to Hyd-Hnk road)
3	1	6	Hanmanwada, Sanjeeva Nagar (except House numbers abutting to Hyd-Hnk road)
4	1	7	R.B. Nagar, Maturi Basthi, Erukalawada (except House numbers abutting to Hyd-Hnk road)
5	1	8	Fort area
6	2	1	Khila Nagar, Harijana Basthi (except House numbers abutting to Nalgonda road)
7	2	2	Kummariwada part of Azad Road
8	2	3	Beechmohalla
9	2	4	Gandhi Nagar, Part of Nehru Road, Nalgonda Road (except House numbers abutting to Nalgonda road)
10	2	5	Jamkhanaguda, Seetha Nagar (except House numbers abutting to Nalgonda road)
11	2	7	Pochammawada, Part of Indira Nagar (except House numbers abutting to Hyd-Nlg road)
12	2	8	Indira Nagar, Kamunikantha (except House numbers abutting to Hyd-Nlg road)
13	2	9	Subash Nagar, Brahamanawada
14	2	10	Khajimohalla, Part of Nehru Road
15	2	11	Reddywada, Part of Kamunikantha (except House numbers abutting to Nalgonda road)
16	2	12	Pochammawada
17	3	1	Santhosh Nagar, Azad Road, Islampura
18	3	2	Beechmohalla
19	3	3	Beechmohalla, Part of Azad Road
20	3	5	Part of Jaleelpura, Part of Komatiwada
21	3	6	Nehru Road, Gangaputra Sangham area, Part of Chavusgally
22	3	7	Part of Komatiwada, Part of Baharpet, Part of Chavusgally
23	3	8	Peddawada
24	3	9	Samalawada, Dhobiwada, Part of Gangaputra Sangham area
25	3	10	Baharpet, Harijanabasthi, Adarsh Nagar, Singannagudem slum area(except House numbers abutting to
26	3	11	Vanjariwada, LB Nagar, Masigadda(except House numbers abutting to Hyd-Nlg road)
27	3	1-7	Hussainabad Village (except House numbers abutting to main road)

ANNEXURE-II (See Rule-4)			
List of Areas Prohibited for High Rise Buildings			
Sl. No	Ward No.	Block No.	Name of the Locality / Area
1	2	3	4
1			All areas as per Annexure-I

ARMOOR MUNICIPALITY			
ANNEXURE-I (See Rule-4)			
List of Old/ Existing Built-Up Areas/ Congested Areas/ Settlement/ Gram Khantam/ Abadi			
Sl.No.	Ward No.	Block No.	Name of the Lociality / Area
1	2	3	4
1	1	1-1-26 to 1-1-26/60	Journalist colony
2	1	1-1-92 to 1-1-143	Maqdoomnagtar colony
3	1	1-9-1 to 1-11 end	Saidabad behind gole bunglow

4	1	1-11-1 to 1-15 End	Laxminarayana Temple area
5	1	1-4-61 to 1-4-end	Oddera Colony & Santhoshnagar
6	2	2-1-1 to 2-5 end	Chota bazaar area
7	3	3-4-1 to 3-7 end	Husnabad area
8	3	3-14-1 to 3-17 end	Rajaramnagar Colony
9	4	4-1-1 to 4-7 end	Kashi Hanuman Gally

ANNEXURE-II (See Rule-4)			
List of Areas Prohibited for High Rise Buildings			
Sl. No	**Ward No.**	**Block No.**	**Name of the Locality / Area**
1	**2**	**3**	**4**
1			**All areas as per Annexure-I**

BODHAN MUNICIPALITY			
ANNEXURE-I (See Rule-4)			
List of Old/ Existing Built-Up Areas/ Congested Areas/ Settlement/ Gram Khantam/ Abadi			
Sl.No.	Ward No.	Block No.	Name of the Lociality / Area
1	2	3	4
1	21	7	Narsi Road, Chakkipet, Old Idgah road
2	22	6	Narsi road, Pangali, Burudgalli, New Idgah road
3	26	4	Darul uloom School, Momina masjid, Maashaiq masjid
4	26	3	Udmirgalli, Mominpura
5	27	1	Dhangargelli, Mominipura
6	27	2	Ambedkar colony, By pass road
7	29	3	Ranjal base, Khundugalli
8	29	4	Brahmangalli, dyakamgalli
9	30	4	Brahmangalli, Chawdi, Teergalli, Jalal Bukhari road, Ranjalbase
10	31	5	Badabazar, Mochigalli, Kasabgalli, Post office area
11	31	6	Boigalli, Govt area hospital

ANNEXURE-II (See Rule-4)			
List of Areas Prohibited for High Rise Buildings			
Sl. No	Ward No.	Block No.	Name of the Locality / Area
1	2	3	4
1			All areas as per Annexure-I

KAMAREDDY MUNICIPALITY			
ANNEXURE-I (See Rule-4)			
List of Old/ Existing Built-Up Areas/ Congested Areas/ Settlement/ Gram Khantam/ Abadi			
Sl.No.	**Ward No.**	**Block No.**	**Name of the Lociality / Area**
1	**2**	**3**	**4**
1	1	13,14 & 15	Rajiv Nagar Colony, Indira Nagar Colony, Vaddara Colony
2	1	4(P) & 12(P)	Panchamukhi Hanman Area, Bathkammakunta Colony.
	2	1 & 2 to 10 & 11 Part	Bada Bazar, Bharath road, Chota Kasab galli, Gadi area, Vadly Gally, Gopla Swamy Temple Area and Shivaji Road
3	3	2 to 9	Harijanawada, Sher Gally, Mudam Gally & Brahman Gally
	4	4 & 5 part	Barkath Pura, Gollawada & Valmiki Nagar
4	4	9 & 10 part	Islampura & Bada Kasab Gally
5	5	1 (P)	Yerukalawada
6	5	7 (P)	Rukmini Kunta

ANNEXURE-II (See Rule-4)			
List of Areas Prohibited for High Rise Buildings			
Sl. No	**Ward No.**	**Block No.**	**Name of the Locality / Area**
1	**2**	**3**	**4**
1			All areas as per Annexure-I

NIZAMABAD MUNICIPALITY			
ANNEXURE-I (See Rule-4)			
List of Old/ Existing Built-Up Areas/ Congested Areas/ Settlement/ Gram Khantam/ Abadi			
Sl.No.	Ward No.	Block No.	Name of the Lociality / Area
1	2	3	4
1	1	5 & 11	Phulong (except Golehanuman road)
2	2	5 & 6	Bhoigally
3	1	2 & 3	Patigally
4	3	1	Jandagally
5	3	8	Kasabgally
6	2 & 3	1,2,3,4&9	Kasabgally
7	2	1,2&3	Narsa Goud Veedhi
8	3	10	Bada Bazar except Ext.Post Office Road
9	8	2,3,4,5,6, 7 & 8	Dharugally & Linegally
10	4	1,2,3,4,5,6,7,8 & 9	Hataigally
11	6	26	Islampura
12	9	8,9 & 10	Gajulpet
13	2	11 & 12	Bobbli Veedhi
14	2	6 & 7	Jawahar Road except main road
15	4	8 & 9	Jawahar Road
16	4	5 & 6	Amberpet
17	3	10	Pusalagally
18	9	11,12,13,14,15 & 16	Ahmedpura Colony and Mustaidpura
19	2	9, 10 & 11	Weekly bazar
20	3	3,4,5,6, & 10	Kotagally
21	12	1,2,3,4,5 & 7	Arsapally (Gramakantham)
22	6	16 & 17	Amdekar colony
23	11	1	Indra Priyadarshini Colony
24	6	22 & 23	Gouthan Nagar (Canal Katta)
25	6	3	Pamulabasti
26	6	1	Chirtain Colony, Kanteshwar
27	5	11	Yellammagutta (Old Abadi)
28	7	11 & 14	Habeebnagar
29	7	12 & 13	Erukala wada
30	9	17 & 20	Shanthi nagar
31	7	1	Ashok Nagar
32	7	3,4 & 5	Kumargally (back side of Pooja Sweet & upto Kishan Gunj Road)
33	7	1	Mirchi Compound (Shan Colonies
34	8	1,2,3,4,5,6,7 & 8	Ahmedi bazar
35	10	11	Hanuman Nagar (Varni Chowrasta)
36	1	1	Hanuman Nagar (Phulong)

ANNEXURE-II (See Rule-4)			
List of Areas Prohibited for High Rise Buildings			
Sl. No	Ward No.	Block No.	Name of the Locality / Area
1	2	3	4
1			All areas as per Annexure-I

TANDUR MUNICIPALITY			
ANNEXURE-I (See Rule-4)			
List of Old/ Existing Built-Up Areas/ Congested Areas/ Settlement/ Gram Khantam/ Abadi			
Sl.No.	Ward No.	Block No.	Name of the Lociality / Area
1	2	3	4
1	1	1Part	C.C.1.Colony, Marikamba colony excluding the sites abutting chincholi, Malreddypally road
2	1	2/P, 3/P, 4/P	Beggars colony , Malreddy pally excluding the sites abutting Malreddy pally 60'-0" wide road

3	1	5,6,7/p	Gareebnagar excluding the sites aborting to chincholi road and Hyd's Road
4	2	1Part	Saipur excluding the sites abutting to Hyd's road road
5	2	1 Part	Saipur excluding the sites abutting to 60'-0" wide Road
6	2	2Part	Muthyaloo colony excluding the sites abutting to 60'-0" wide road
7	3	2	Venkateswara & Khan Gally excluding the sites abutting to 60'-0" wide road
8	4	1,2,3	Dobhi Gally, Subhash nagar excluding the sites abutting to 50'-0" wide road
9	5	1,2,3,4,5,6	Golla Cheruvu, Herrar ward, Ghanpur ward excluding the sites abutting to 60'-0" wide road
10	6	2,3,4	Dhobi Gally, Subhashnagar
11	6	5,6,7	v addera Gally
12	7	1,2,3,4,5,6	Seetarampet excluding the sites abutting to 50'-0" & 60'-0" wide road
13	8	1part	Harijan wada,Manik nagar
14	8	1 Part	Sweepers colony
15	8	2,3,4,5,6 Part	Harijan Ward
16	8	6,7,8,9,10	Harijan Wada, Kasab colony, Momini Gally, Gadi

ANNEXURE-II (See Rule-4)			
List of Areas Prohibited for High Rise Buildings			
Sl. No	**Ward No.**	**Block No.**	**Name of the Locality / Area**
1	**2**	**3**	**4**
1			All areas as per Annexure-I

VIKARABAD MUNICIPALITY			
ANNEXURE-I (See Rule-4)			
List of Old/ Existing Built-Up Areas/ Congested Areas/ Settlement/ Gram Khantam/ Abadi			
Sl.No.	**Ward No.**	**Block No.**	**Name of the Lociality / Area**
1	**2**	**3**	**4**
1	1	Block 1	Kothagadi weaker section
2	1,2	Block 2	Kothagadi old Abadi
3	3	8	Alampally slum ward no. 3
4	4	9	Alampally slum ward no. 4
5	5	8	Alampally, Afsar Jung BAgh Slum Ward No's 6,28&6
6	8	7	Lalaguda
7	9	2	Yenepally Village
8	10	3	Sivareddypet Village
9	11	3	Harijana wada, Sivareddypet
10	11	1&2	KOthrepally Village
11	12	4	Venkatapur Thanda
12	12	4	Maddulagadda Thanda
13	13,14	12	Gangaram & Madhu Colony Village
14	13	12	EWS Colony Gangaram
15	15	3	Rajiv Nagar Colony
16	15	4	Chenchu Colony
17	26	1,2,3	Ananthagiripally
18	27	4	Laxmi Nagar Thanda
19	16	11	Ramaiahguda
20	16	11	Ambedkar Nagar
21	17	2	Indhar Nagar
22	18	2	Gareeb nagar
23	23,27	2	Shivaram NAgar
24	28	9	Venkateswara Colony
25	21	1	Subash Nagar Colony, Vegetable Market
26	22&24	1&2	BTS Colony Amradi Colony & IShakant Bagh
27	18	2	Kanylal Bagh, Fire station
28	20	5 & 6	Old Gung
29	19	4	Gandi Colony & Chowdary Colony

ANNEXURE-II (See Rule-4)			
List of Areas Prohibited for High Rise Buildings			
Sl. No	**Ward No.**	**Block No.**	**Name of the Locality / Area**
1	**2**	**3**	**4**
1			All areas as per Annexure-I

ICHAPURAM MUNICIPALITY			
ANNEXURE-I (See Rule-4)			
List of Old/ Existing Built-Up Areas/ Congested Areas/ Settlement/ Gram Khantam/ Abadi			
Sl.No.	**Ward No.**	**Block No.**	**Name of the Lociality / Area**
1	**2**	**3**	**4**
1	1 & 2	--	Purushothapuram
2	1 & 3	--	A.S. Peta
3	23	--	Bellupda Colony
4	4	--	G.J. Colony
5	5	--	Kandra Veedhi
6	6	--	Krishna Nagar
7	7 & 8	--	Uppala Veedhi
8	11	--	Kaspa Jalari Veedhi
9	11 & 12	--	Kaspa Koyya Veedhi
10	12, 13, 14	--	Bullupada I&II
11	15	--	Danam Peta
12	17	--	Lala Peta
13	21 & 22	--	Golla Veedhi I & II
14	18, 19, 20	--	Rattakanna

ANNEXURE-II (See Rule-4)			
List of Areas Prohibited for High Rise Buildings			
Sl. No	**Ward No.**	**Block No.**	**Name of the Locality / Area**
1	**2**	**3**	**4**
1			-Nil-

PALASA - KASIBUGGA			
ANNEXURE-I (See Rule-4)			
List of Old/ Existing Built-Up Areas/ Congested Areas/ Settlement/ Gram Khantam/ Abadi			
Sl.No.	Ward No.	Block No.	Name of the Lociality / Area
1	2	3	4
1	6	--	Segidi veedhi
2	6	--	Pondara veedhi
3	6	--	Denki veedhi
4	6	--	Kondi veedhi
5	7	--	Harjana veedhi
6	8	--	Chinna Brahmina street
7	8	--	Pedda Brahmina street
8	9	--	Medara veedhi
9	11	--	Relli veedhi
10	18	--	Kapu veedhi
11	18	--	Sanjaya nagar
12	19	--	Battula street
13	19	--	Kondi veedhi, Palasa
14	20	--	Indira nagar, Palasa
15	23		Godagala veedhi
16	21	--	Ullasa peta, Palasa
17	22	--	Pamidi veedhi, Udayapuram
18	23	--	Harjana veedhi, Udayapuram
19	23, 24	--	Rajamma Colony, Palasa
20	24, 25		Seetarama Nagar, Palasa
21	25	--	Kowsalya Nagar, Palasa
22	25	--	Vasudev Peta, Palasa
23	25	--	Hsrjana veedhi, Purushotta puram
24	13	--	Sudi konda, Purushottapuram

ANNEXURE-II (See Rule-4)			
List of Areas Prohibited for High Rise Buildings			
Sl. No	Ward No.	Block No.	Name of the Locality / Area
1	2	3	4
1	6	--	Segidi veedhi
2	6	--	Pondara veedhi
3	6	--	Denki veedhi
4	6	--	Kondi veedhi
5	7	--	Harjana veedhi
6	8	--	Chinna Brahmina street
7	8	--	Pedda Brahmina street
8	9	--	Medara veedhi
9	11	--	Relli veedhi
10	18	--	Kapu veedhi
11	18	--	Sanjaya nagar
12	19	--	Battula street
13	19	--	Kondi veedhi, Palasa
14	20	--	Indira nagar, Palasa
15	23		Godagala veedhi
16	21	--	Ullasa peta, Palasa
17	22	--	Pamidi veedhi, Udayapuram
18	23	--	Harjana veedhi, Udayapuram
19	23, 24	--	Rajamma Colony, Palasa
20	24, 25		Seetarama Nagar, Palasa
21	25	--	Kowsalya Nagar, Palasa
22	25	--	Vasudev Peta, Palasa
23	25	--	Hsrjana veedhi, Purushotta puram
24	13	--	Sudi konda, Purushottapuram

AMUDALAVALASA MUNICIPALITY			
ANNEXURE-I (See Rule-4)			
List of Old/ Existing Built-Up Areas/ Congested Areas/ Settlement/ Gram Khantam/ Abadi			
Sl.No.	**Ward No.**	**Block No.**	**Name of the Lociality / Area**
1	**2**	**3**	**4**
1	1	--	1) Thimmapuram 2) Byrisastrulupeta & Jaggusastrulupeta 3) Parvateesampeta
2	2	--	4) Krishnapuram 5) Dalinaidu quarters & Pentayya quarters
3	3	--	6) Voosavanipeta 7) Kasimvalasa
4	4	--	8) Gedelavanipeta 9) Kasimvalasa
5	5	--	10) Sottavanipeta 11)Pantulapeta 12) Akkivalasa 13) Reddypeta
6	6	--	14) Nandagiripeta 15) Nadanapuram 16) Sanapalavanipeta 17) Turakapeta 18) T.Mannayyapeta 19) K. Mannayyapeta
7	7	--	20) Chintada
8	9	--	21) JMK factory road, Gollaveedhi Shiridisai road, Teachers quarters road 22) Ammanagar
9	10	--	23) Gandhinagar 24) Vambay colony
10	11	--	25) Krishanagar, Puttaveedhi , Kuppliveedhi, Manukonda veedhi Seetaram nagar
11	12	--	26) Chandrayyapeta quarters, Lingayya quarters 27) Laxminagar
12	13	--	28) Killivari quarters 29) Vidya Nagar
13	14	--	30) I.J. Naidu colony
14	15	--	31) Pathinavari peta, Ganesh nagar
15	16		32) Vardavari quarters, Market street
16	17	--	33) Sayanna quarters, 34) Pujaripeta
17	18	--	35) Medaraveedhi
18	19	--	36) Patha Amadalavalasa
19	20	--	37) Vengalarao Nagar Colony
20	21		38) Kuddiram 39) Ravikantipeta & Atchennapeta
21	22	--	40) Laxmudipeta
22	23	--	41) Venkyyapeta

ANNEXURE-II (See Rule-4)			
List of Areas Prohibited for High Rise Buildings			
Sl. No	**Ward No.**	**Block No.**	**Name of the Locality / Area**
1	**2**	**3**	**4**
1	1	--	1) Thimmapuram 2) Byrisastrulupeta & Jaggusastrulupeta 3) Parvateesampeta
2	2	--	4) Krishnapuram 5) Dalinaidu quarters & Pentayya quarters
3	3	--	6) Voosavanipeta 7) Kasimvalasa
4	4	--	8) Gedelavanipeta 9) Kasimvalasa
5	5	--	10) Sottavanipeta 11)Pantulapeta 12) Akkivalasa 13) Reddypeta
6	6	--	14) Nandagiripeta 15) Nadanapuram 16) Sanapalavanipeta 17) Turakapeta 18) T.Mannayyapeta 19) K. Mannayyapeta
7	7	--	20) Chintada
8	9	--	21) JMK factory road, Gollaveedhi Shiridisai road, Teachers quarters road 22) Ammanagar
9	10	--	23) Gandhinagar 24) Vambay colony
10	11	--	25) Krishanagar, Puttaveedhi , Kuppliveedhi, Manukonda veedhi Seetaram nagar
11	12	--	26) Chandrayyapeta quarters, Lingayya quarters 27) Laxminagar
12	13	--	28) Killivari quarters 29) Vidya Nagar
13	14	--	30) I.J. Naidu colony
14	15	--	31) Pathinavari peta, Ganesh nagar
15	16		32) Vardavari quarters, Market street
16	17	--	33) Sayanna quarters, 34) Pujaripeta
17	18	--	35) Medaraveedhi
18	19	--	36) Patha Amadalavalasa
19	20	--	37) Vengalarao Nagar Colony

20	21		38) Kuddiram 39) Ravikantipeta & Atchennapeta
21	22	--	40) Laxmudipeta
22	23	--	41) Venkyyapeta

RAJAM (NAGAR PANCHAYAT)

ANNEXURE-I
(See Rule-4)

List of Old/ Existing Built-Up Areas/ Congested Areas/ Settlement/ Gram Khantam/ Abadi

Sl.No.	Ward No.	Block No.	Name of the Lociality / Area
1	2	3	4
1	1	--	Butchipeta
2	2	--	Dolapeta S.C. Colony
3	1	--	Ponugutivalasa Colony
4	1	--	Ponugutivalasa SC Colony
5	4	--	Karakula Street of Saradhi Village
6	4	--	Srinivasa Colony of Saradhi Village
7	3	--	Asapu Street of Saradhi Village
8	10	--	Kummari Veedhi of Rajam Village
9	9	--	Burri Street of Rajam
10	9	--	Kondaka Street of Rajam
11	13	--	Latchayyapeta of Rajam
12	15	--	Mallikharjuna Colony except Main Road
13	9	--	Mentipeta Colony
14	9	--	Thimmayyapeta
15	1, 2, 3, 4	--	Kottavalasa Village
16	5	--	Gopalapuram Village
17	9	--	Mentipeta Village
18	8, 9	--	Mentipeta S.C. Colony
19	6	--	Yatha Street
20	3	--	Satyannarayanapuram of Rajam
21	7	--	Golla Street of Rajam
22	6	--	Mediga Street of Rajam
23	7	--	Vanjarampeta Village
24	01 & 02	--	Vanjarampeta Village
25	15	--	Gayatrinagar Colony
26	7	--	Chakali Street
27	11	--	Madhava Bazar
28	6	--	Hosptial Road Area

ANNEXURE-II
(See Rule-4)

List of Areas Prohibited for High Rise Buildings

Sl. No	Ward No.	Block No.	Name of the Locality / Area
1	2	3	4
1	1	--	Butchipeta
2	2	--	Dolapeta S.C. Colony
3	1	--	Ponugutivalasa Colony
4	1	--	Ponugutivalasa SC Colony
5	4	--	Karakula Street of Saradhi Village
6	4	--	Srinivasa Colony of Saradhi Village
7	3	--	Asapu Street of Saradhi Village
8	10	--	Kummari Veedhi of Rajam Village
9	9	--	Burri Street of Rajam
10	9	--	Kondaka Street of Rajam
11	13	--	Latchayyapeta of Rajam
12	15	--	Mallikharjuna Colony except Main Road
13	9	--	Mentipeta Colony
14	9	--	Thimmayyapeta
15	1, 2, 3, 4	--	Kottavalasa Village
16	5	--	Gopalapuram Village
17	9	--	Mentipeta Village
18	8, 9	--	Mentipeta S.C. Colony
19	6	--	Yatha Street
20	3	--	Satyannarayanapuram of Rajam
21	7	--	Golla Street of Rajam
22	6	--	Mediga Street of Rajam
23	7	--	Vanjarampeta Village
24	01 & 02	--	Vanjarampeta Village
25	15	--	Gayatrinagar Colony
26	7	--	Chakali Street
27	11	--	Madhava Bazar
28	6	--	Hosptial Road Area

SRIKAKULAM MUNICIPALITY			
ANNEXURE-I (See Rule-4)			
List of Old/ Existing Built-Up Areas/ Congested Areas/ Settlement/ Gram Khantam/ Abadi			
Sl.No.	**Ward No.**	**Block No.**	**Name of the Lociality / Area**
1	**2**	**3**	**4**
1	1	-	Balagana Mettu – Bavaji hota, Expect Proposed Master Plans Roads East: Palakonda Road North: Balaga Mettu Road West: Govt Hospital Road to Balaga Connecting Road South: Govt Hospital Road
2	5	-	Bayamma Thota (Near: Jagannadha Swami Temple), Except Proposed Master Plan Roads East: Bondilipuram Road North: Barathi I.T.C West: Palakonda Road South: Bondilipuram to Palakonda Road
3	19	-	Adi Andhra Veedhi (Harijana Veedhi) and Mavoori Veedhi, Bondilipuram Expect Proposed Master Plans Roads East: Collector Office Road North: Santhoshi Matha Temple Jn West: C.B Road South: River
4	28	-	Kandra Veedhi (Near: Mangu Vari Thota), Expect Proposed Master Plans Roads East: Mangu Vari Thota Road North: Back side of Lepparcy Colony West: Flood Walls South: Flood Walls
5	29	-	Dammala Relli Veedhi, Old Dammala Vedhi and Godagalla Veedhi Expect Proposed Master Plans Roads East: Sarangadola Veedhi North: Gudi Veedhi Rikshaw Stand West: Flood Walls South: Golkonda Revu Veedhi
6	33	-	Yerra Tank, Except Proposed Master Plans Roads East: 60' Master Plan Road North: Part of P.N. Colony West: Tank Bund South: Old G.T Road
7	1	-	Balaga Pondara Veedhi
8	2	-	Bondilipuram Pondara Veedhi
9	17	-	Arasavalli Yetha Veedhi
10	23	-	Jandala Veedhi & Dumpa Relli Veedhi
11	35	-	Naiducheruvu Gattu
12	33	-	Choudhary Satyanarayana Colony
13	12	-	Theppala Veedhi & Kella Veedhi
			56 Notified Slums

ANNEXURE-II (See Rule-4)			
List of Areas Prohibited for High Rise Buildings			
Sl. No	**Ward No.**	**Block No.**	**Name of the Locality / Area**
1	**2**	**3**	**4**
1	1	-	Balagana Mettu – Bavaji hota, Expect Proposed Master Plans Roads East: Palakonda Road North: Balaga Mettu Road West: Govt Hospital Road to Balaga Connecting Road South: Govt Hospital Road
2	5	-	Bayamma Thota (Near: Jagannadha Swami Temple), Except Proposed Master Plan Roads East: Bondilipuram Road North: Barathi I.T.C West: Palakonda Road

			South: Bondilipuram to Palakonda Road
3	19	-	Adi Andhra Veedhi (Harijana Veedhi) and Mavoori Veedhi, Bondilipuram Expect Proposed Master Plans Roads East: Collector Office Road North: Santhoshi Matha Temple Jn West: C.B Road South: River
4	28	-	Kandra Veedhi (Near: Mangu Vari Thota), Expect Proposed Master Plans Roads East: Mangu Vari Thota Road North: Back side of Lepparcy Colony West: Flood Walls South: Flood Walls
5	29	-	Dammala Relli Veedhi, Old Dammala Vedhi and Godagalla Veedhi), Expect Proposed Master Plans Roads East: Sarangadola Veedhi North: Gudi Veedhi Rikshaw Stand West: Flood Walls South: Golkonda Revu Veedhi
6	33	-	Yerra Tank, Except Proposed Master Plans Roads East: 60' Master Plan Road North: Part of P.N. Colony West: Tank Bund South: Old G.T Road
7	1	-	Balaga Pondara Veedhi
8	2	-	Bondilipuram Pondara Veedhi
9	17	-	Arasavalli Yetha Veedhi
10	23	-	Jandala Veedhi & Dumpa Relli Veedhi
11	35	-	Naiducheruvu Gattu
12	33	-	Choudhary Satyanarayana Colony
13	12	-	Theppala Veedhi & Kella Veedhi
			56 Notified Slums

NARSIPATNAM MUNICIPALITY			
ANNEXURE-I (See Rule-4)			
List of Old/ Existing Built-Up Areas/ Congested Areas/ Settlement/ Gram Khantam/ Abadi			
Sl.No.	Ward No.	Block No.	Name of the Lociality / Area
1	2	3	4
1	--	19,20,21, 22	Back side of Vikash Bhavanam Area to Kalasi Colony, Dobi Colony, Sivavalam Area and part of the 19 Block
2	--	16,20,23	B.C. Colony, P.N.R. Palem, part of the Gopanna Veedhi
3	--	17,19	S.C. New Colony, S.C. Colony part of the 19 Block
4	--	16,17,26, 27,28	Gas Gowdown Area, Dadi vari Veedhi, part of the Kapu Veedhi, kummiri veedhi, Elleati vari Veedhi part of the Alletivari veedhi and part of the 16 Block
5	--	3,28,31	Gandi vari veedhi, part of the velama veedhi, Tavva vari veedhi part of the Allete vari veedhi, bondada vari veedhi, Muslim veedhi.
6	--	23,24,25, 29,31	Brahmana veedhi, Gavara veedhi, court veedhi, M.R.O Office Area, R.D.O Office area, Gas Office Area, Navata Tranaport Area, part of the Allete vari veedhi.
7	--	26,28,30, 33,34,35	Part of the Allete vari veedhi, Kotha veedhi, part of the East.
8	--	8,35,36,37,48	Ramarao peta, Sastry master master gari veedhi, Surya cable veedhi, Kanishka Apartment Area, S.K.P.T. Area, Bangararaju Theater Area Main Road, Back side part of the Udipi Hotel.
9	--	1,32,35	Part of the East Koths veedhi, Dwarakanagaram, Balighattam Shanthinagar.
10	--	1,2,3,9	Thearissa Colony, R.T.C. Colony, Mandala Colony.
11	--	1,2,9,10,11, 12	India Colony, part of the Ambhadkar Colony, S.C/B.C, Colony Ramarao Colony, Part of the Sriramnagar Colony.
12	--	1,4,8,12,15	Part of the Block no's 7, 8, 9 in Boddepalli, Nukalamma Veedhi, Velama Reddy Brothers veedhi, Market Road, Kanakamahalaxmi veedhi, Bhandaru veedhi, A.P. Residential School Road, Maridamma veedhi.
13	--	3,10,15,19	Boddepalli, Block no's 14,15,16, Joginadhunipalem, Appannadorapalem, part of the Subbarayudupalem.
14	--	3,10,15,19	Bank Colony, Kotauvartla Road I.T.I Junction, Satyasai School to Kapu veedhi, Anjaneyaswamy Temple, part of the Indira Colony, Operation Colony.
15	--	1,2,3,4,10, 12	Bank Colony, Saradanagar, church veedhi, B.C.Colony East George Area.
16	--	2,3,4	Ramakovula area S.C. Colony, via East gorge to Modam end (Gandhi Statue)
17	--	4,5,6,7,9	Balegattam velama veedhi, B.C. Colony, East groge Area.
18	--	7,8,10,11	New Bypureddypalem, Old Bypureddypalem.
19	--	8,10,12,13	Seethayyapalem, Kallempudi, Krishnapuram, New Bypureddypalem, Anjaneyaswamy Temple Area, Baleghattam devangula Veedhi, Lingapuram.
20	--	2,3,8	R.T.C. Complex area, Fire Station area, Prathiba School area, Satyasai baba Temple area.
21	--	38,39	Venkunaidu pata, Back side of part of Saibaba Temple Laxinagar.
22	--	1,2,3	Bonthi veedhi old Bus stand, Tuni Road part of the South, Viswanath Ice parlar area, Gangadhar Theatre area, Gorli vari Veedhi, Lory yard.
23	--	4,5,14	Dhanimireddy vari Veedhi, chapala cheruvu area, Gangaraju meda, Left part of the Ayyannapalem.

24	--	3,6,8,14	Part of the North Tuni Road, Ayyaraka veedhi, Medara Veedhi, Thota Veedhi, Krishana bazaar, Lagudu vari Veedhi, part of the Velama Veedhi.
25	--	11,12,14,15	Velama veedhi, Chakala veedhi, Gachapu Veedhi.
26	--	9,10,12	Left side of 1,2,3 Street in Shivapuram, part of right side in Ayyannapalem, Back side of Singh Doctor Hospital area, Laletha Nursing Home Junction.
27	--	4,10,12,13	C.B.M. Compound area, Anjaneyaswamy Temple veedhi, (Gachapu veedhi) area, In front of R&B Office Road, Gurrala Road, In front of D.S.P. Bunlow Ayyanna Colony.

ANNEXURE-II
(See Rule-4)

List of Areas Prohibited for High Rise Buildings

Sl. No	Ward No.	Block No.	Name of the Locality / Area
1	2	3	4
1	--	19,20,21, 22	Back side of Vikash Bhavanam Area to Kalasi Colony, Dobi Colony, Sivavalam Area and part of the 19 Block
2	--	16,20,23	B.C. Colony, P.N.R. Palem, part of the Gopanna Veedhi
3	--	17,19	S.C. New Colony, S.C. Colony part of the 19 Block
4	--	16,17,26, 27,28	Gas Gowdown Area, Dadi vari Veedhi, part of the Kapu Veedhi, kummiri veedhi, Elleati vari Veedhi part of the Alletivari veedhi and part of the 16 Block
5	--	3,28,31	Gandi vari veedhi, part of the velama veedhi, Tavva vari veedhi part of the Allete vari veedhi, bondada vari veedhi, Muslim veedhi.
6	--	23,24,25, 29,31	Brahmana veedhi, Gavara veedhi, court veedhi, M.R.O Office Area, R.D.O Office area, Gas Office Area, Navata Tranaport Area, part of the Allete vari veedhi.
7	--	26,28,30, 33,34,35	Part of the Allete vari veedhi, Kotha veedhi, part of the East.
8	--	8,35,36,37,48	Ramarao peta, Sastry master master gari veedhi, Surya cable veedhi, Kanishka Apartment Area, S.K.P.T. Area, Bangararaju Theater Area Main Road, Back side part of the Udipi Hotel.
9	--	1,32,35	Part of the East Koths veedhi, Dwarakanagaram, Balighattam Shanthinagar.
10	--	1,2,3,9	Thearissa Colony, R.T.C. Colony, Mandala Colony.
11	--	1,2,9,10,11, 12	India Colony, part of the Ambhadkar Colony, S.C/B.C, Colony Ramarao Colony, Part of the Sriramnagar Colony.
12	--	1,4,8,12,15	Part of the Block no's 7, 8, 9 in Boddepalli, Nukalamma Veedhi, Velama Reddy Brothers veedhi, Market Road, Kanakamahalaxmi veedhi, Bhandaru veedhi, A.P. Residential School Road, Maridamma veedhi.
13	--	3,10,15,19	Boddepalli, Block no's 14,15,16, Joginadhunipalem, Appannadorapalem, part of the Subbarayudupalem.
14	--	3,10,15,19	Bank Colony, Kotauvartla Road I.T.I Junction, Satyasai Schoo; to Kapu veedhi, Anjaneyaswamy Temple, part of the Indira Colony, Operation Colony.
15	--	1,2,3,4,10, 12	Bank Colony, Saradanagar, church veedhi, B.C.Colony East George Area.
16	--	2,3,4	Ramakovula area S.C. Colony, via East gorge to Modam end (Gandhi Statue)
17	--	4,5,6,7,9	Balegattam velama veedhi, B.C. Colony, East groge Area.
18	--	7,8,10,11	New Bypureddypalem, Old Bypureddypalem.
19	--	8,10,12,13	Seethayyapalem, Kallempudi, Krishnapuram, New Bypureddypalem, Anjaneyaswamy Temple Area, Baleghattam devangula Veedhi, Lingapuram.
20	--	2,3,8	R.T.C. Complex area, Fire Station area, Prathiba School area, Satyasai baba Temple area.
21	--	38,39	Venkunaidu pata, Back side of part of Saibaba Temple Laxinagar.
22	--	1,2,3	Bonthi veedhi old Bus stand, Tuni Road part of the South, Viswanath Ice parlar area, Gangadhar Theatre area, Gorli vari Veedhi, Lory yard.
23	--	4,5,14	Dhanimireddy vari Veedhi, chapala cheruvu area, Gangaraju meda, Left part of the Ayyannapalem.
24	--	3,6,8,14	Part of the North Tuni Road, Ayyaraka veedhi, Medara Veedhi, Thota Veedhi, Krishana bazaar, Lagudu vari Veedhi, part of the

			Velama Veedhi.
25	--	11,12,14,15	Velama veedhi, Chakala veedhi, Gachapu Veedhi.
26	--	9,10,12	Left side of 1,2,3 Street in Shivapuram, part of right side in Ayyannapalem, Back side of Singh Doctor Hospital area, Laletha Nursing Home Junction.
27	--	4,10,12,13	C.B.M. Compound area, Anjaneyaswamy Temple veedhi, (Gachapu veedhi) area, In front of R&B Office Road, Gurrala Road, In front of D.S.P. Bunlow Ayyanna Colony.

ANKAPALEE MUNICIPALITY			
ANNEXURE-I (See Rule-4)			
List of Old/ Existing Built-Up Areas/ Congested Areas/ Settlement/ Gram Khantam/ Abadi			
Sl.No.	**Ward No.**	**Block No.**	**Name of the Lociality / Area**
1	**2**	**3**	**4**
1	1	--	Anjayya Colony
2	2	--	Sreeramnagar Dhodi Colony
3	3	--	Miryala Colony
4	4	--	Laxmidevipeta
5	4	--	Laxmidevipeta Harijanapeta
6	5	--	Sweepers & Scavangers Colony
7	8	--	Bheemunigummam Relliveedhi
8	8	--	Bheemunigummam
9	9	--	Kotniveedhi West
10	12	--	Kotniveedhi East
11	13	--	Golla Veedhi
12	14	--	Pillavari Veedhi
13	23, 24, 25, 26, 27	--	Arundhathi Nagar, Boyagudam, Gavarapalem Hajianapeta, Demunithota, Gavarampalem, Dhobi Colony
14	28	--	Balajiraopeta
15	29	--	Relli vedhi
16	30	--	Parasuramunipeta
17	33	--	Vijayaramarajupeta
18	34	--	Old Burma Colony
19	34	--	Sreeramnagar, New Sreerama Nagar Colony
20	6	--	Velpula Veedhi

ANNEXURE-II (See Rule-4)			
List of Areas Prohibited for High Rise Buildings			
Sl. No	**Ward No.**	**Block No.**	**Name of the Locality / Area**
1	**2**	**3**	**4**
1	1	--	Anjayya Colony
2	2	--	Sreeramnagar Dhodi Colony
3	3	--	Miryala Colony
4	4	--	Laxmidevipeta
5	4	--	Laxmidevipeta Harijanapeta
6	5	--	Sweepers & Scavangers Colony
7	8	--	Bheemunigummam Relliveedhi
8	8	--	Bheemunigummam
9	9	--	Kotniveedhi West
10	12	--	Kotniveedhi East
11	13	--	Golla Veedhi
12	14	--	Pillavari Veedhi
13	23, 24, 25, 26, 27	--	Arundhathi Nagar, Boyagudam, Gavarapalem Hajianapeta, Demunithota, Gavarampalem, Dhobi Colony
14	28	--	Balajiraopeta
15	29	--	Relli vedhi
16	30	--	Parasuramunipeta
17	33	--	Vijayaramarajupeta
18	34	--	Old Burma Colony
19	34	--	Sreeramnagar, New Sreerama Nagar Colony
20	6	--	Velpula Veedhi

BHEEMUNIPATNAM MUNICIPALITY			
ANNEXURE-I (See Rule-4)			
List of Old/ Existing Built-Up Areas/ Congested Areas/ Settlement/ Gram Khantam/ Abadi			
Sl.No.	**Ward No.**	**Block No.**	**Name of the Lociality / Area**
1	**2**	**3**	**4**
1	15, 16	23, 24	Thotaveedhi
2	20	12	Boyiveedhi
3	21	15	Yeguvapeta
4	2	20	Kondapeta Harijanapeta Colony
5	24	37	Harijinapeta, Mamidivaram
6	8	46	Tagarapuvalasa Harijanapeta
7	2	50	Kondapeta Gollaveedhi
8	14	35	Kummarapalem Valanda Bhoomulu
9	24	36	Yathakummaripalem
10	13	62, 63	Chillapeta Jeerupeta
11	27	42	Sangivalasa Colony
12	26	41	Valandapeta
13	14	39	Rajalingampeta
14	7	58	Harijanapeta – Santhapeta
15	15	20	Burma Colony
16	4	60	Kothapeta Grama Khantam
17	11	56	Kummari Reddika Veedhi
18	23	36	Kondapeta New Road
19	6	59	Velampeta
20	4	60	Pittari Gutta
21	11	56	Kummari Reddika Veedhi
22	2	50	Kondapeta – Harijanapeta
23	25	40	Nammivanipeta
24	23	36	Gollakummaripalem
25	3, 4	52, 53, 54	C. J. Mill Quarters Area
26	10	48	Dr. Bhaskara Rao Street

ANNEXURE-II (See Rule-4)			
List of Areas Prohibited for High Rise Buildings			
Sl. No	**Ward No.**	**Block No.**	**Name of the Locality / Area**
1	**2**	**3**	**4**
1	15, 16	23, 24	Thotaveedhi
2	20	12	Boyiveedhi
3	21	15	Yeguvapeta
4	2	20	Kondapeta Harijanapeta Colony
5	24	37	Harijinapeta, Mamidivaram
6	8	46	Tagarapuvalasa Harijanapeta
7	2	50	Kondapeta Gollaveedhi
8	14	35	Kummarapalem Valanda Bhoomulu
9	24	36	Yathakummaripalem
10	13	62, 63	Chillapeta Jeerupeta
11	27	42	Sangivalasa Colony
12	26	41	Valandapeta
13	14	39	Rajalingampeta
14	7	58	Harijanapeta – Santhapeta
15	15	20	Burma Colony
16	4	60	Kothapeta Grama Khantam
17	11	56	Kummari Reddika Veedhi
18	23	36	Kondapeta New Road
19	6	59	Velampeta
20	4	60	Pittari Gutta
21	11	56	Kummari Reddika Veedhi
22	2	50	Kondapeta – Harijanapeta
23	25	40	Nammivanipeta
24	23	36	Gollakummaripalem
25	3, 4	52, 53, 54	C. J. Mill Quarters Area
26	10	48	Dr. Bhaskara Rao Street

VISHAKAPATNAM – (M.C)			
ANNEXURE-I (See Rule-4)			
List of Old/ Existing Built-Up Areas/ Congested Areas/ Settlement/ Gram Khantam/ Abadi			
Sl.No.	Ward No.	Block No.	Name of the Lociality / Area
1	2	3	4
1.	1,2,3	--	Hanumanthwaka Junction to Dindayalapuramalong Simhachalam hill slope
2.	14	--	New Resapuvanipalem
3.	19	--	Bhanojinagar, Pithanidibba, Santoshimatha Colony
4.	20	--	Dibbapalem
5.	21	--	Kotha Salipeta, Gendachetu Street
6.	22	--	Agraharam Street, Telakala Street,Dwarmvari Street, Chattlavari Street, Asipapa Street, Dnka Street, Relli Veedhi Main Road
7.	23	--	Kodapandala Dibba, Chattlavari Street
8.	24	--	Gangabathal Street, N.Venkappa street, Gajula Street, Sivalayam street, Main Road, Bukka Street, Kadambari Street, Chengalraopeta road, Agraharam Street,Town Hall road, Chinnamavari street, Chavala street, Gongula street, Seetaramaswamy street, Main Road.
9.	25	--	Kota Veedhi, Ambusanga Veedhi, Kadiridasappa street, Pata Salipeta, Palla street, Athmapuri Street, Main road, Rudhrawari Street, Changanti Street, Raja Street, Kandula Street, Godawari Street, Thiyala street,
10.	26	--	Madara Street, Periki Street, Woodyard Street, Poola street, Chintapandu street
11.	28	--	Kantamvari Street, Kumara veedhi, Allipuram Road
12.	30	--	Total Ward except Railway Quarters.
13.	31	--	Venkateswara Colony, Jagannadhapuram.
14.	32	--	Muslim Tatichetlapalem, Gollapalem.
15.	33	--	Narendranagar, Tatichetlapalem.
16.	34	--	Ganeshnagar (Hill slope), Varahagiri Colony (Hiill slope), Simhagiri Colony (Hill slope),Singalamma Colony (Hill slope), Satyasai Nagar (Hill slope).
17.	35	--	Kasutirinagar, Kaparada, Kailasapuram,Jayaprakhnagar, Tikkavanipalem colony, Ramjee Estate, Sanjeevayya Colony,Santoshnagar, Gangannanagar,Jogaraonagar, Santosh Nagar (Hill slope).
18.	36	--	Reddy Kancharlapalem,Gollakancharlapalem, Jashuvanagar, Ashoknagar, durganagar
19.	37	--	Srinivasa Nagar (Hill slope).
20.	38	--	A.S.R.Nagar, Burma Camp, LB Nagar,irijanagar, Satyanagar, Ayyappanagar, Manyikamba Colony, Chakala Veedhi,Ajaykalam Nagar, Sai Ram Nagar (Hill slope)
21.	41	--	Ramunaidu Colony, Thummadipalem,Subhashnagar, Gokulnagar,Gajapathinagar,Nalanda Nagar.
22.	42	--	Gurajada Nagar, Sanjeeva Nagar,saketapuram.
23.	43	--	Gavara Kancharapalem, Megadripeta,Rammurthypanthulupeta
24.	44	--	Gnanapuram.
25.	46	--	Kunchamma Colony.
26.	47	--	Ganapathinagar, Kotha Nakkavanipalem,Hanuman Nagar.
27.	48	--	Indiranagar, Pavanaputra Nagar, Bapuji Colony.
28.	49	--	Durganagar, Gudivada appanna Colony,Ganapathinagar (Hill Slope).
29.	60	--	Dasimikonda (Hill slope), Chitinaidu Colony (Hill slope).
30.	62	--	Dayalanagar (Hill slope), Ambedkar Colony.
31.	63	--	Sankarnagar, Sainagar, Kaiasnagar, Meharnagar, Nehrunagar,Pydimaba Colony,Azimabad, Simhagiri Colony (Hill slope),Seetharamnagar, Indira Colony.
32.	64	--	Pentayanagar, Patulugarimeda,Jogavanipalem, Krishnanagar, Ganesh Nagar, Old Gajuvaka.
33.	69	--	B.C.Colony, Anjanaya Nagar (Hill slope),Gangireddi colony (Hill slope).

34.	70	--	Lakshmipuram, santhinagar Chinnamushidiwada), SC, BC,Colony (Chinnamushidivada).
35.	71	--	danagar, Dhronamrajunagar,Dggavanipalem.
36.	72	--	I) All Village settlements (Gramakanthams) ii) All notified slum areas and EWS Housing areas
37.	73	--	In the areas covered by Tarakaramanagar, Rishikonda Satellite township maximum height upto 10 m for residential buildings shall be allowed.

ANNEXURE-II
(See Rule-4)

List of Areas Prohibited for High Rise Buildings

Sl. No	Ward No.	Block No.	Name of the Locality / Area
1	**2**	**3**	**4**
1	--	--	All areas and localities mentioned in Annexure –I, except for plots abutting 24 m and above roads
2	--	--	1 km from the boundary of existing and proposed Airports
3	--	--	1 km from the boundary of Defence establishments, Naval base, NSTL, Port, HPCL, Hindustan Shipyard and other oil based industries.
4	--	--	Areas covered in Coastal Regulation Zone (CRZ).

SKY-SCRAPER ZONE

Minimum height of High Rise buildings in this zone shall be 36 metres. However, normal buildings of public utility and institutional nature may be allowed. The minimum plot size is 4000 sq m and abutting road width shall be 24 m for such sites where Sky scrapers are proposed in the following areas:

i) Earmarked areas in proposed New Townships of VUDA

ii) To be earmarked in Yendada, Madhurwada, Vepagunta, Kappulapadda, Kommadi and Pardeshipalem by VUDA taking into consideration the suitability of areas, viz. soil capacity, history of earth quakes, formations in case of coastal areas, etc. Discourage sky scrapers along hill slopes from environment, conservation and safety points of view.

YELAMANCHALI MUNICIPALITY			
ANNEXURE-I **(See Rule-4)**			
List of Old/ Existing Built-Up Areas/ Congested Areas/ Settlement/ Gram Khantam/ Abadi			
Sl.No.	**Ward No.**	**Block No.**	**Name of the Lociality / Area**
1	**2**	**3**	**4**
1	--	--	Yerravaram – 25 Grama Khantam
2	--	--	Peddapalli Grama Khantam
3	--	--	Kokkirapalli Gram Khantam
4	--	--	Ramaraidu Palem Gram Khantam
5	--	--	Somalinga palem Gram Khantam
6	--	--	Kattupalem Gram Khantam
7	--	--	Teruvuupalli Gram Khantam
8	--	--	Yellamanchili : 1. Pathaveedhi 2. Ramachandramma Colony 3. Veerabhadraswami Temple Area 4. Kakivani Veedhi (Except Main Road) 5. Dharmavaram 6. Madigapeta 7. Gollakonda 8. Ramnagar Except Main Road (peddapalli Road) 9. A.S.R. Colony (Except Main Road) 10. Sheshukonda Colony (Tulasi Nagar) 11. Yanadri Colony 12. Kothapalem Area 13. Kothapeta

ANNEXURE-II **(See Rule-4)**			
List of Areas Prohibited for High Rise Buildings			
Sl. No	**Ward No.**	**Block No.**	**Name of the Locality / Area**
1	**2**	**3**	**4**
1	--	--	Yerravaram – 25 Grama Khantam
2	--	--	Peddapalli Grama Khantam
3	--	--	Kokkirapalli Gram Khantam
4	--	--	Ramaraidu Palem Gram Khantam
5	--	--	Somalinga palem Gram Khantam
6	--	--	Kattupalem Gram Khantam
7	--	--	Teruvuupalli Gram Khantam
8	--	--	Yellamanchili : 1. Pathaveedhi 2. Ramachandramma Colony 3. Veerabhadraswami Temple Area 4. Kakivani Veedhi (Except Main Road) 5. Dharmavaram 6. Madigapeta 7. Gollakonda 8. Ramnagar Except Main Road (peddapalli Road) 9. A.S.R. Colony (Except Main Road) 10. Sheshukonda Colony (Tulasi Nagar) 11. Yanadri Colony 12. Kothapalem Area 13. Kothapeta

BOBBILI MUNICIPALITY			
ANNEXURE-I (See Rule-4)			
List of Old/ Existing Built-Up Areas/ Congested Areas/ Settlement/ Gram Khantam/ Abadi			
Sl.No.	**Ward No.**	**Block No.**	**Name of the Lociality / Area**
1	**2**	**3**	**4**
1	1	--	Harajana Street, Patha Bobbli, Patha Bobbl North (Pallem Veedhi) Muddana Veedhi, Naidu Veedhi & Dibba Veedhi (PB), Dibba Veedhi
2	2	--	Patha Bobbli Veedhi
3	3	--	Adi Andhara Veedhi, Akularelli Veedhi & Boi Veedhi, Prasadnagar Colony (Patha Bobbli), Pedda Chakali Veedhi (Bobbli Village), Sanga Veedhi (Bobbli Village)
4	7	--	Gondavari Veedhi & Reddika Veedhi
5	8	--	Rajanagar Colony, Ammigari Koneru & Sivalayam Veedhi
6	9	--	Kanchera Veedhi, Devangula Veedhi
7	10	--	Harajanawada Gollapalli, Kurakula Veedhi & Manda Veedhi (Gollapalli)
8	11	--	Gollapalli Veedhi (Gollapalli
9	13	--	Maharanipeta (Gollapalli Village), Yerukala Veedhi
10	14	--	Appayapeta
11	15	--	Palla Veedhi (Gopalapally)
12	16	--	Yatra Veedhi – Sarakottu Sandu, Chintada Veedhi & Kummari Veedhi
13	17	--	Mangali Veedhi & Penki Veedhi
14	19	--	Maharajupeta & Dasari Veedhi, K.C.I.E.(Gollapudi (V)
15	21	--	Ramannadora Valasa (Gollapalli (V), Premanagar Colony, (Mallammapeta (V), Guest House.
16	22	--	Mallammapeta
17	23	--	Ambedkar Colony
18	24	--	Railway station Jn. and Barmasala Colony
19	27	--	Nagasapu Veedhi
20	28	--	Janda Veddhi, Bobbili (V),
21	29	--	Paki Veedhi Phase – 1 & 2
22	30	--	T.R.Colony

ANNEXURE-II (See Rule-4)			
List of Areas Prohibited for High Rise Buildings			
Sl. No	**Ward No.**	**Block No.**	**Name of the Locality / Area**
1	**2**	**3**	**4**
1	1	--	Harajana Street, Patha Bobbli, Patha Bobbl North (Pallem Veedhi) Muddana Veedhi, Naidu Veedhi & Dibba Veedhi (PB), Dibba Veedhi
2	2	--	Patha Bobbli Veedhi
3	3	--	Adi Andhara Veedhi, Akularelli Veedhi & Boi Veedhi, Prasadnagar Colony (Patha Bobbli), Pedda Chakali Veedhi (Bobbli Village), Sanga Veedhi (Bobbli Village)
4	7	--	Gondavari Veedhi & Reddika Veedhi
5	8	--	Rajanagar Colony, Ammigari Koneru & Sivalayam Veedhi
6	9	--	Kanchera Veedhi, Devangula Veedhi
7	10	--	Harajanawada Gollapalli, Kurakula Veedhi & Manda Veedhi (Gollapalli)
8	11	--	Gollapalli Veedhi (Gollapalli
9	13	--	Maharanipeta (Gollapalli Village), Yerukala Veedhi
10	14	--	Appayapeta
11	15	--	Palla Veedhi (Gopalapally)
12	16	--	Yatra Veedhi – Sarakottu Sandu, Chintada Veedhi & Kummari Veedhi
13	17	--	Mangali Veedhi & Penki Veedhi
14	19	--	Maharajupeta & Dasari Veedhi, K.C.I.E.(Gollapudi (V)
15	21	--	Ramannadora Valasa (Gollapalli (V), Premanagar Colony, (Mallammapeta (V), Guest House.
16	22	--	Mallammapeta
17	23	--	Ambedkar Colony
18	24	--	Railway station Jn. and Barmasala Colony
19	27	--	Nagasapu Veedhi
20	28	--	Janda Veddhi, Bobbili (V),

21	29	--	Paki Veedhi Phase – 1 & 2
22	30	--	T.R.Colony

PARVATHIPURAM MUNICIPALITY			
ANNEXURE-I (See Rule-4)			
List of Old/ Existing Built-Up Areas/ Congested Areas/ Settlement/ Gram Khantam/ Abadi			
Sl.No.	**Ward No.**	**Block No.**	**Name of the Lociality / Area**
1	**2**	**3**	**4**
1	1	--	Gasi Veedhi, Dubhadda Veedhi, Turpu Veedhi, Gedela Veedhi, Kanakam Veedhi, Kosuru Veedhi, Patrudu Veedhi, Patrudu Cheruvugattu Veedhi.
2	2	--	Venkateswara Colony, Kakarla Veedhi
3	3	--	Bapuji Colony, Janatha Colony, Tarakarama Colony, Vivekananda Colony, Mehar Veedhi, Tagore Veedhi, Indira Veedhi.
4	4	--	Gopal Das Peta, Bharat Bhavan Road
5	5	--	Kotta Veedhi, Rama Mandiram Veedhi
6	6	--	Relli Veedhi (Kottavalasa)
7	7	--	Telakala Veedhi, Kenguva Veedhi, Mondi Veedhi
8	8	--	Vijayaramaraju Colony
9	9	--	Godagala Veedhi, Pedamadiga Veedhi, Sweeper Veedhi, Chinamadiga Veedhi, Pydi Veedhi
10	10	--	Muttavari Veedhi
11	11	--	Mahanthi Veedhi, Ganta Veedhi, Punnapureddi Veedhi, Yata Veedhi, Mehar Veedhi
12	12	--	Bye-Pass Colony
13	13	--	Bye-Pass Colony
14	14	--	Golla Veedhi, Gunnayya Quarters, Gandhi Nagar
15	15	--	Gedda Veedhi, Maddila Veedhi, Gowda Veedhi, Aguru Veedhi, Peluru Veedhi
16	17	--	Bangaramma Colony
17	18	--	Burada Veedhi, Bangaramma Colony
18	19	--	Jammu Veedhi, Kovela Veedhi, Belagam Harijanawada
19	20	--	Rickshaw pullers Colony
20	22	--	Nehru Colony, Botuvari Cheruvu South and West Sides, Sarika Veedhi
21	23	--	Kangati Veedhi, Sankha Veedhi, Botu Veedhi, Kodugudla Veedhi, Lingam Veedhi
22	24	--	Naidu Veedhi, Chakala Veedhi, Gorli Veedhi, Bhugata Veedhi
23	25	--	Relli Veedhi, Chakala Veedhi, Gorli Veedhi, Bhugata Veedhi
24	26	--	Kusumaguddi Veedhi, Telukala Veedhi
25	27	--	Kummara Veedhi, Talabattula Veedhi, Gembala Veedhi, Siriyala Veedhi
26	28	--	Kanchara Veedhi, Kakarla Veedhi, China Devara Veedhi
27	29	--	Gowdu Veedhi, Gullipalli Veedhi, Rampuram Veedhi
28	30	--	Ramapuram Colony, Pydi Veedhi, Harjana Peta.

ANNEXURE-II (See Rule-4)			
List of Areas Prohibited for High Rise Buildings			
Sl. No	**Ward No.**	**Block No.**	**Name of the Locality / Area**
1	**2**	**3**	**4**
1	1	--	Gasi Veedhi, Dubhadda Veedhi, Turpu Veedhi, Gedela Veedhi, Kanakam Veedhi, Kosuru Veedhi, Patrudu Veedhi, Patrudu Cheruvugattu Veedhi.
2	2	--	Venkateswara Colony, Kakarla Veedhi
3	3	--	Bapuji Colony, Janatha Colony, Tarakarama Colony, Vivekananda Colony, Mehar Veedhi, Tagore Veedhi, Indira Veedhi.
4	4	--	Gopal Das Peta, Bharat Bhavan Road
5	5	--	Kotta Veedhi, Rama Mandiram Veedhi
6	6	--	Relli Veedhi (Kottavalasa)
7	7	--	Telakala Veedhi, Kenguva Veedhi, Mondi Veedhi
8	8	--	Vijayaramaraju Colony
9	9	--	Godagala Veedhi, Pedamadiga Veedhi, Sweeper Veedhi, Chinamadiga Veedhi, Pydi Veedhi
10	10	--	Muttavari Veedhi
11	11	--	Mahanthi Veedhi, Ganta Veedhi, Punnapureddi Veedhi, Yata Veedhi, Mehar Veedhi
12	12	--	Bye-Pass Colony
13	13	--	Bye-Pass Colony
14	14	--	Golla Veedhi, Gunnayya Quarters, Gandhi Nagar

15	15	--	Gedda Veedhi, Maddila Veedhi, Gowda Veedhi, Aguru Veedhi, Peluru Veedhi
16	17	--	Bangaramma Colony
17	18	--	Burada Veedhi, Bangaramma Colony
18	19	--	Jammu Veedhi, Kovela Veedhi, Belagam Harijanawada
19	20	--	Rickshaw pullers Colony
20	22	--	Nehru Colony, Botuvari Cheruvu South and West Sides, Sarika Veedhi
21	23	--	Kangati Veedhi, Sankha Veedhi, Botu Veedhi, Kodugudla Veedhi, Lingam Veedhi
22	24	--	Naidu Veedhi, Chakala Veedhi, Gorli Veedhi, Bhugata Veedhi
23	25	--	Relli Veedhi, Chakala Veedhi, Gorli Veedhi, Bhugata Veedhi
24	26	--	Kusumaguddi Veedhi, Telukala Veedhi
25	27	--	Kummara Veedhi, Talabattula Veedhi, Gembala Veedhi, Siriyala Veedhi
26	28	--	Kanchara Veedhi, Kakarla Veedhi, China Devara Veedhi
27	29	--	Gowdu Veedhi, Gullipalli Veedhi, Rampuram Veedhi
28	30	--	Ramapuram Colony, Pydi Veedhi, Harjana Peta.

SALURU MUNICIPALITY			
ANNEXURE-I (See Rule-4)			
List of Old/ Existing Built-Up Areas/ Congested Areas/ Settlement/ Gram Khantam/ Abadi			
Sl.No.	Ward No.	Block No.	Name of the Lociality / Area
1	2	3	4
1	1	6	Kota Veedhi
2	2	3	Mentada Veedhi
3	2	4	Pappla Veedhi
4	3	1	Gumadam Old SC Colony
5	3	1	Gumadam New Harijana Colony (Dibba)
6	3	1	Gumadam New Harijana Colony
7	3	1	Gumadam Naidu Street
8	4	1	Lepsory Coliny
9	4	1	Chmari Veedhi
10	5	2	Relli Veedhi
11	7	61	Sweepers Colony
12	8	59	Konki Veedhi
13	8	57	Mettu Veedhi
14	9	55	Neyyala Veedhi
15	10	53	Bonumahanthi Veedhi
16	11	54	China Harijanapeta
17	12	54	Chinamalapalli Part (Janni Veedhi)
18	13	50	Bonu Veedhi
19	14	51	Bangaramma Colony
20	14	51	Godagala Colony
21	14	51	Neliparthi Colony
22	15	49	Peddakummari Veedhi
23	16	48	Gorle Veedhi
24	16	51	Majjula Peta
25	16	50	Mandala Veedhi
26	17	45	Naidu Veedhi
27	18	44	Duggana Veedhi
28	21	29	Golla Veedhi
29	22	22	Telaga Veedhi
30	22	16	Chakala Veedhi
31	23	30	Sriram Nagar Colony
32	25	64	PN Boddavalasa BC
33	25	64	PN Boddavalasa SC
34	25	62	Bangaramma Peta BC
35	25	63	Bangaramma Peta SC
36	26	21	Sri Venkateshwara Colony
37	26	20	Medara Veedhi
38	26	20	Konetigattu Veedhi
39	27	19	Dabbi Veedhi
40	28	13	Reddika Veedhi

ANNEXURE-II (See Rule-4)			
List of Areas Prohibited for High Rise Buildings			
Sl. No	Ward No.	Block No.	Name of the Locality / Area
1	2	3	4
1	1	6	Kota Veedhi
2	2	3	Mentada Veedhi
3	2	4	Pappla Veedhi
4	3	1	Gumadam Old SC Colony
5	3	1	Gumadam New Harijana Colony (Dibba)
6	3	1	Gumadam New Harijana Colony
7	3	1	Gumadam Naidu Street
8	4	1	Lepsory Coliny
9	4	1	Chmari Veedhi
10	5	2	Relli Veedhi
11	7	61	Sweepers Colony
12	8	59	Konki Veedhi
13	8	57	Mettu Veedhi
14	9	55	Neyyala Veedhi
15	10	53	Bonumahanthi Veedhi

16	11	54	China Harijanapeta
17	12	54	Chinamalapalli Part (Janni Veedhi)
18	13	50	Bonu Veedhi
19	14	51	Bangaramma Colony
20	14	51	Godagala Colony
21	14	51	Neliparthi Colony
22	15	49	Peddakummari Veedhi
23	16	48	Gorle Veedhi
24	16	51	Majjula Peta
25	16	50	Mandala Veedhi
26	17	45	Naidu Veedhi
27	18	44	Duggana Veedhi
28	21	29	Golla Veedhi
29	22	22	Telaga Veedhi
30	22	16	Chakala Veedhi
31	23	30	Sriram Nagar Colony
32	25	64	PN Boddavalasa BC
33	25	64	PN Boddavalasa SC
34	25	62	Bangaramma Peta BC
35	25	63	Bangaramma Peta SC
36	26	21	Sri Venkateshwara Colony
37	26	20	Medara Veedhi
38	26	20	Konetigattu Veedhi
39	27	19	Dabbi Veedhi
40	28	13	Reddika Veedhi

VIZIANAGARAM MUNICIPALITY			
ANNEXURE-I (See Rule-4)			
List of Old/ Existing Built-Up Areas/ Congested Areas/ Settlement/ Gram Khantam/ Abadi			
Sl.No.	**Ward No.**	**Block No.**	**Name of the Lociality / Area**
1	**2**	**3**	**4**
1	Revenue (V)	--	Kanapaka
2	Cantonment	--	Sanjivnagar Colony
3	Revenue (V)	--	Ganjipeta
4	Cantonment	--	Sweepera Colony (Cantonment)
5	Cantonment	--	Ambedkar Colony
6	Cantonment	--	Lalbahadur Colony, Chennareddy colony
7	Santhapeta South Ward	--	Boorlapeta
8	Santhapeta South Ward	--	Santhinagar
9	Santhapeta South Ward	--	Butchennakoneru
10	Kothapeta North Ward	--	Lankapatnam (north)
11	Kothapeta North Ward	--	Hukumpeta (saibula st.,)
12	Kothapeta North Ward	--	Sweepers Colony (Kothapeta)
13	Vizianagaram IInd Bit	--	Nadiguddi
14	Vizianagaram IInd Bit	--	Phoolbaugh Colony (Vysanarayana metta)
15	Vizianagaram IInd Bit	--	Phoolbaugh (Kalakarula Colony)
16	Maharajapeta North	--	Phoolbaugh (Mangala Veedhi Colony)
17	Vizianagaram IInd Bit	--	Kumili road 1+1 Colony
18	Vizianagaram IInd Bit	--	Lepsory Colony
19	Maharajapeta North Ward	--	Ashok nagar (Ghosha hospital) Shadikhana area
20	Maharajapeta North Ward	--	Kata Veedhi EWS Colony (SC Hostel)
21	Maharajapeta North Ward	--	Budi Veedhi – Banga Veedhi)
22	Maharajapeta North Ward	--	Rajivnagar EWS Colony
23	Kaspa East Ward	--	Nanjathulapeta (near Stadiumpeta)
24	Kaspa East Ward	--	Stadiumpeta EWS Colony
25	Kaspa West Ward	--	Yerukulapeta (Jonnaguddi)
26	Kaspa West Ward	--	Jonnaguddi Relli Colony
27	Kaspa West Ward	--	Jonnaguddi – Bit- II
28	Vizianagaram 1st Bit Revenue (V)	--	Thotapalem SC Colony
29	Cantonment	--	Nagojipeta
30	Revenue Village	--	V.T. Agraharam BC Colony
31	Revenue Village	--	V.T. Agraharam Village, Yatha Veedhi, Reddi Ceedhi
32	Revenue Village	--	V.T. Agraharam SC Colony
33	Revenue Village	--	V.T. Agraharam (Yatra Veedhi) Rangoli Veedhi)

ANNEXURE-II (See Rule-4)			
List of Areas Prohibited for High Rise Buildings			
Sl. No	**Ward No.**	**Block No.**	**Name of the Locality / Area**
1	**2**	**3**	**4**
1	Revenue Village	--	Kanapaka
2	Cantonment	--	Sanjivnagar Colony
3	Revenue Village	--	Ganjipeta
4	Cantonment	--	Sweepera Colony (Cantonment)
5	Cantonment	--	Ambedkar Colony
6	Cantonment	--	Lalbahadur Colony, Chennareddy colony
7	Santhapeta South Ward	--	Boorlapeta
8	Santhapeta South Ward	--	Santhinagar
9	Santhapeta South Ward	--	Butchennakoneru
10	Kothapeta North Ward	--	Lankapatnam (north)
11	Kothapeta North Ward	--	Hukumpeta (saibula st.,)
12	Kothapeta North Ward	--	Sweepers Colony (Kothapeta)
13	Vizianagaram IInd Bit	--	Nadiguddi
14	Vizianagaram IInd Bit	--	Phoolbaugh Colony (Vysanarayana metta)
15	Vizianagaram IInd Bit	--	Phoolbaugh (Kalakarula Colony)
16	Maharajapeta North	--	Phoolbaugh (Mangala Veedhi Colony)
17	Vizianagaram IInd Bit	--	Kumili road 1+1 Colony
18	Vizianagaram IInd Bit	--	Lepsory Colony
19	Maharajapeta North Ward	--	Ashok nagar (Ghosha hospital) Shadikhana area
20	Maharajapeta North Ward	--	Kata Veedhi EWS Colony (SC Hostel)
21	Maharajapeta North Ward	--	Budi Veedhi – Banga Veedhi)
22	Maharajapeta North Ward	--	Rajivnagar EWS Colony
23	Kaspa East Ward	--	Nanjathulapeta (near Stadiumpeta)
24	Kaspa East Ward	--	Stadiumpeta EWS Colony
25	Kaspa West Ward	--	Yerukulapeta (Jonnaguddi)
26	Kaspa West Ward	--	Jonnaguddi Relli Colony
27	Kaspa West Ward	--	Jonnaguddi – Bit- II
28	Vizianagaram 1st Bit Revenue Village	--	Thotapalem SC Colony
29	Cantonment	--	Nagojipeta
30	Revenue Village	--	V.T. Agraharam BC Colony
31	Revenue Village	--	V.T. Agraharam Village, Yatha Veedhi, Reddi Ceedhi
32	Revenue Village	--	V.T. Agraharam SC Colony
33	Revenue Village	--	V.T. Agraharam (Yatra Veedhi) Rangoli Veedhi)

AMALAPURAM MUNICIPALITY			
ANNEXURE-I (See Rule-4)			
List of Old/ Existing Built-Up Areas/ Congested Areas/ Settlement/ Gram Khantam/ Abadi			
Sl.No.	**Ward No.**	**Block No.**	**Name of the Lociality / Area**
1	**2**	**3**	**4**
1.	2	10 & 11	Tamara Cheruvu Gattu Road, Old Police lane, Nalla Street Vanapallivari Street.
2	3	10	Kalvakolanu Street Road leading to Municipal School Area.
3	4	8	Jandagalli Street.
4	6	9	Polisettivari Street, V.M. Ranga Nagar, Rajiv Street.
5	7	8	Garapati Street, North side & Lanes and Nalla reddy Naidu Lane.
6	8	7&8	Annabathulavari Street, Ravanam Mallayya gari Street, Vyapara Street Ravanam Street cross roads.
7	9	6	Ramakrishna Street, Vinayaka Veedhi, Vishnupuram.
8	10	6	Tirugullavari Street, Mahipala Street.
9	11	7	Ome Santhi Building Road, Srirapuram, Ashoknagar.
10	12	7	Babul Saheb Street, Vydyanadham Street, Thathavarthivari Street.
11	13	5	Mujafar lane, Z.P.H.School north side line
12	14	5	Aditya School Opp.School Area, Gollagudem.
13	15	4	Kowndinya Nagar, Pilli Subba Raju Street, Ramajogayya street, Chinnayya street, Gangaraju Street, Dungavari Street, Dommetivari Veedhi, Subrahmanyeswara Swamy Temple Street.
14	17	4	Gandhi Street.
15	18	4	Subdhadra Nagar
16	21	4	Nehru Street,
17	22	2	Bhogaraju Street, Manikyamba Veedhi, Gannavarapuvari Veedhi.
18	23	3	Prakasam Street, Dakshnamurthy Street, pattabhi Street, Krishnarao Street.
19	24	1 & 2	Atchutharamayya Veedhi, Pitchayya lane, Devangula Street, Gold Market Street, Suggvari Street, Subbalamma Temple Road to KNF Roadm Venkataramana Theatre back side, besie Settibalaji Grandhalayam Roadm Naibrahamana Road, State Bank lane.
20	25	2	Chitapalli Krishna Murthy Veedhi, Periparayya Sastry Street
21	26	2	Suryabalaji Street, Jampavari Street Subbalamma Temple Area, Vishnu Street Hotel Area.

ANNEXURE-II (See Rule-4)			
List of Areas Prohibited for High Rise Buildings			
Sl. No	**Ward No.**	**Block No.**	**Name of the Locality / Area**
1	**2**	**3**	**4**
Total no.of slums 33			All Slum areas in Amalapuram Municipality
1	1		Chintagunta Cheruvu
2	5.6		Suryanarayanapuram
3	10		Gangiredla Gudem
4	9		Stambalamerka
5	9		Sayammapeta
6	9 & 10		Gandhinagar
7	9		Janikipeta & Jambavanpeta
8	14		Madalapeta
9	17		Vaddigudem and Menduvaripeta
10	18		Srirama Nagar Harijanawada
11	20		Venkatakrishnapuram
12	19		Bandivaripeta
13	25		Narayanapeta & Prabhakara Nagar
14	25		Upparla colony
15	28		Sitapathiraopeta
16	27		EWS Colony
17	26		Market Area
18	28		Sawmill Workers Colony
19	29		Vanacherlavari Street
20	29		Savaram Harijanawada
21	1		Metla Colony
22	28		Dudivari Agraharam S.C.Colony
23	23		Sri Dasanjeneya Temple Veedhi

24	11		Subbanna Colony
25	27		Kalavantula Colony
26	22		Chakali Cheruvu
27	13 & 14		Dr. K.Subba RAo Hospital to Rangapuram Road
28	1		Padminipeta
29	13		Ramakrishna Veedhi (Gollaguem Area)
30	13,15,16&17		Surya Nagar
31	30		Chakalipeta(Near Block Bridge)
32	30		Bandivaripeta
33	30		Ravulacheruvu
34			1 NH 214 Road
35			From Gandhi Statue to KIMS Hospital
36			From Gandhi Statue to Y.Junction.
37			2. A.G.Road
38			From Edarapalli Bridge to Gandhi Statue
39			3 KNF Road
40			From Mummidivaram Gat to Balayogi Ghat

GOLLAPROLU MUNICIPALITY			
ANNEXURE-I (See Rule-4)			
List of Old/ Existing Built-Up Areas/ Congested Areas/ Settlement/ Gram Khantam/ Abadi			
Sl.No.	Ward No.	Block No.	Name of the Lociality / Area
1	2	3	4

ANNEXURE-II (See Rule-4)			
List of Areas Prohibited for High Rise Buildings			
Sl. No	Ward No.	Block No.	Name of the Locality / Area
1	2	3	4

KAKINADA MUNICIPAL CORPORATION			
ANNEXURE-I (See Rule-4)			
List of Old/ Existing Built-Up Areas/ Congested Areas/ Settlement/ Gram Khantam/ Abadi			
Sl.No.	**Ward No.**	**Block No.**	**Name of the Lociality / Area**
1	**2**	**3**	**4**
1	1	70/p	Ramanayyapeta Boat Club Back, Gollapeta, Settibalijipeta, Ramalayam Area
2	20	61	J.Ramaraopeta area
3	21	57,60	Municipal Market area, Kummari veedhi areas
4	23	53,55,56,59	Jagannadhapuram Sivalayam area
5	25	51	Vishnalayama area & Puramvari Street
6	27	39/p	Suryanarayanapuram
7	28	31/p	Suryanarayanapuram area
8	32	30/p	Rellipeta, Thotipeta and Malikarjuna peta areas
9	34	20/p	Seshabgalli area
10	36	5	Madireddy Vari Street ,Kothapeta Area.
11	40	8/p, 9/p	Mallayya Agraharam
12	46	1/p	Kondayyapalem , Harijanapeta area
13	47	1/p	Kondayyapalem area
14	48	68/p	Ashok Nagar, Durga Gudi Area
15			All the areas where the existing road width is less than 30 feet /9 mts.
16	.		All notified 63 slums and 38 non notified slums

ANNEXURE-II (See Rule-4)			
List of Areas Prohibited for High Rise Buildings			
Sl. No	**Ward No.**	**Block No.**	**Name of the Locality / Area**
1	**2**	**3**	**4**
1	1P	70P	Ramanayyapeta Old Village (East: Ramanayyapeta, Main Roadm West: Boats Club, North : RamanayyapetaMarket South : Prakruthi Ashram)
2	9P	16P	Indira Nagar , Bala venkata Nagar Areas
3	12P	16P,17P	Revenue Colony and Venkateswara Nagar Areas
4	16P	45P,50P,54P	Yesu vari Street, Jaganadhapuram
5	27P,28,29P,31P	28 P,33 P,37 P,43 P,29,30,31, 32,38,39,41,32	Market Area , Suryanarayanapuram Areas, i.e, area between main road on west, railway line on east, Mantripragadavari Street on North & Warf road on South, except sites abutting Main road (Subash Road)
6	33P	19 P	Bank peta area
7	34P	20 P	Area between SRMT office in Main road and Mejestic Street
8	40	8 P,9 P	Mallayya Agraharam Area, Elwinpeta Areas
9	44P	64 P	Treasury Colony Area, i.e., South: Pratap nagar road, West : Samarlkot Road. North : Railway line , East : Road on Eastern side of Pratap nagar Water tank.
10			All the areas mentioned in Annexture-I
11			Areas covered in coastal regulation zone (CRZ)

MANDAPETA MUNICIPALITY			
ANNEXURE-I (See Rule-4)			
List of Old/ Existing Built-Up Areas/ Congested Areas/ Settlement/ Gram Khantam/ Abadi			
Sl.No.	**Ward No.**	**Block No.**	**Name of the Lociality / Area**
1	**2**	**3**	**4**
1	1	4	Sri Lakshmi Theatre back side, Gollalagunta
2	3	4	Mangala bodhi gattu
3	7	5,6,7,8	Musini durgamma street, Pillil mallayya street, Water tank area,

			Vijaya press street. Kollavari Street, Nalam vari Street, Lega vari street.
4	8	9,11,12,13	Dr.Kameswara rao gari street, Dasireddy vari street, Reddy panthulu street, Old Andhra Bank street, Mangalavari street, Dr.Veeranna chowdary hospital back side, Mangala jagannadham street, Koppisettivari street, Durgammagudi back side P.Muthyanjayam House street,
5	13	13,14	Yeramati vari street, Bogilla vari street,
6	14	14,27,25,26	Guthi suryarao street, Musinivari street,setti balija peta Vegulla suraya rao street, Nandi kolla vari street,
7	15	22,23,24,25,26,27	Tamma vari street Korukonda vari street, Kummara vari street, Mutyala vari street, Marini sasharao street, Setti balija peta Gopisetti vari street.
8	16	24,26	Mallipudi ramarao street, Koppaka subba rao street back side, S.B.T.SMpl school back side streets, Tamma vari street Basaveswara swamy temple street.
9	17	28,29	Satti Musalayya Street, China kanchara Street.
10	18	18,19,20,21	Nayudu annapurna street, Nayudu veeranna street. Mandru vari street, Merla Vankatarao street, Nuni Ramesh street, Penumarthi vari street, V.V.S. Chowdary gari Street, Agraharam Street, Boda vari vari street.
11	19	29	Duggirala vari street, Matam street.
12	20	15,16,29	Koppiseti vari street. Chundru subbayamma street, Valluri vari gadula street. Reddy suryam vari street, chenna vari street, vanka bodiyya vari street, Reddy latchana gari street.
13	23	31	Rama chandrudu kalava gattu
14	24	33	Saidilpeta, park , opposite streets Saidilpeta Enging
15	25	32,34	Saidilpeta 1 and 2 streets, Saidilpeta Temple street. Vani mahal opposite street.
16	28	34	Water Works road Water Works side road.
17	29	34	Putta Satyanarayana Street, Palatodu ratnam street.
			SLUMS
1			Medarapeta & Government Hospital Area.
2			Veternary Hospital Area
3			Anand Nagar
4			Gandhinagar
5			Bapuji nagar
6			Pallipeta & Rajakapeta
7			Taravani peta & Veerraju peta
8			Layout No.418/79 (Harijanapeta New Colony)
9			Surya rao peta
10			Ravulapeta
11			Veerabhadrapuram
12			Layout No.96/77 (Bapuji School& Harijana peta)

13			Rajakapeta
14			Gandhinagar (kolivari Thota)
15			Seventh day Church area
16			Harijanapeta
17			Sanghampuntha colony
18			Ravulapeta- II

ANNEXURE-II (See Rule-4)			
List of Areas Prohibited for High Rise Buildings			
Sl. No	**Ward No.**	**Block No.**	**Name of the Locality / Area**
1	**2**	**3**	**4**
1			1. Alamuru Road from Yedidha road junction to by-pass road junction
2			2. Dwarapudi road Bustand junction to pedda kaluva Bridge

MUMIDIVARAM MUNICIPALITY			
ANNEXURE-I (See Rule-4)			
List of Old/ Existing Built-Up Areas/ Congested Areas/ Settlement/ Gram Khantam/ Abadi			
Sl.No.	**Ward No.**	**Block No.**	**Name of the Lociality / Area**
1	**2**	**3**	**4**

ANNEXURE-II (See Rule-4)			
List of Areas Prohibited for High Rise Buildings			
Sl. No	**Ward No.**	**Block No.**	**Name of the Locality / Area**
1	**2**	**3**	**4**

PEDDAPURAM MUNICIPALITY			
ANNEXURE-I (See Rule-4)			
List of Old/ Existing Built-Up Areas/ Congested Areas/ Settlement/ Gram Khantam/ Abadi			
Sl.No.	**Ward No.**	**Block No.**	**Name of the Lociality / Area**
1	**2**	**3**	**4**
1	1		Kotha varalapalli streer,patha varapalli street,palli street
2	2		Kota street,palli st.,Maseed st.,Scavengers st.
3	3		Golla st.,thaditata st.,puppala st.,narayana puram st.,Harmila st,
4	4		Karanam gari st.,Gandham vari st.,vakkalanka st.,Nagarala st.,Malireddy vari st.,Gubbala st.,parsila suryanarayana st.,Atlu sanyasi st.,adireddy naganna st.,Loka maridamma st.,
5	5		Bukka vari st.,kanchara st.,puvvula vari st.,
6	6		Golla st.,puppala vari st.,gokina vari st.,kanchara st.,varaganti vari st.,jangareddy vari st.,
7	7		Dorayya peta st.,pulavala vari st.,Golla st.,nandyala vari st.,
8	8		Nandyala vari st.,uzurdar st.,dharam varma reddy vari st.,golla peta reddy vari st.,chittam vari st.,Christian line st.,pulavala vari st.,
9	9		Harijana peta st.,Yanadula st.,Kondayya peta st.,
10	11		Palinka vari st.,bhavarajam gari st.,maryammar street,kata vari st.,varahalayya peta st.,
11	12		Varahalayya peta st.,bhavaraju vari st.,mery ayyar st.,pariseela st.,turupu peta., rajaka street.,
12	13		Narati st., valibutchi st., medara st., muskim st.,pathi vari st.,grandhi vari st.,thalabattula vari st.,turupu peta
13	14		Agraharam st.,pula vari st.,pedda st.,pula vari st.,
14	15		Timma raju peta st.,palli st.,bansu vari st.,
15	16		Gadigadla vari st.,challa vari st.,gummala vari st.,amatam vari st.,gunnam vari st.,kowdi vari st.,mangalavarapu peta lanes.,mavuri vari st.,sappati vari st.,subbayya peta lanes
16	17		Neelam vari st.,Keekanam peta st., kaspa st.,jatla vari st.,gummala vari st.,gokeda vari st.,
17	18		Chode vari st.,banina sankarayya peta st.,golla peta st.,gopisetti vari st.,sappati vari st.,
18	19		Neelam vari st.,veerraju peta st.,ibbandipeta st.,bangaramma gudi lanes
19	20		Tank bund st.,
20	21		Vakkalanka vari st.,maseed lane.,chokkakula vari st.,neela peta st.,rajaka st., Brahmin st.,maseed st.,eleven peta st.,nagam peta st., chervugattu st
21	22		Velama peta st.,eleven peta st
22	23		Sathi reddy peta st.,bonded labour colony
23	24		Setti peta st., darga peta st

ANNEXURE-II (See Rule-4)			
List of Areas Prohibited for High Rise Buildings			
Sl. No	**Ward No.**	**Block No.**	**Name of the Locality / Area**
1	**2**	**3**	**4**
1			Rajahmundry Road
2			ADB Road
3			Jaggampeta Road
4			Samalkot Road
5			Pithapuram Road
6			Ramaraopeta
7			Valu Thimmapuram Road
8			Old Peddapuram Road
9			Vadlamuru Road
10			Rayabhupala Patnam Road

PITHAPURAM MUNICIPALITY			
ANNEXURE-I (See Rule-4)			
List of Old/ Existing Built-Up Areas/ Congested Areas/ Settlement/ Gram Khantam/ Abadi			
Sl.No.	Ward No.	Block No.	Name of the Lociality / Area
1	2	3	4
1			Agraharam, Adi Andhra Palli (Arundatee yutapeta, Slaughter house road, Sweepers colony.
2			LF Road, Kummara Veedhi, Challavari Veedhi, Medidi Vari Veedhi, Challagali vari Veedhi,
3			Puttavari Veedhi, Yadhavagudem Veedhi, Aratithota Veedhi, Salipeta extension area.
4			Puttavari Veedhi, Salipeta Yandra peta, Bojjavari thota part, Mekavari Veedhi, Routhuvari Veedhi.
5			Sitaramapuram, Devarajula vari Veedhi.
6			Saibaba Temple side street, subbaraiu temple Veedhi, Municipal Cattle's depot raod,
7			Indiranagar Harijanapeta Part
8			Indiranagar Harijanapeta Part
9			Ashram Veedhi. Medaragudem Veedhi. Mirapakayala Veedhi.China Harijanapeta
10			Gujarati Peta, Veeravaram Rani gari Veedhi. Post office back side streets.
11			Post office Veedhi, ravula vari veedhi, Sanyasiralla veedhi, Aaganti vari veedhi, Aarugulla veedhi.
12			Opposite streets at Kanakadurga temple in uppada road.
13			Pikkerla peta, Vanupula veedhi, Vangala vari veedhi,
14			Edukaluvalu Area, Kamannagari Pakalu Area.
15			Karapavari veedhi, puliyyakaluva veedhi, darga veedhi, gaali gangalamma gudi veedhi, sistikamamula veedhi.
16			Pedaharijana peta, Radhala harijanapeta.
17			Vundivari thota rea. Krishna gudi veedhi, (yaadava gudem)
18			Jaggayyacheruvu ara, gutla veedhi,yanadhi colony extension area, lakshminarasapuram road.
19			Chakirevula noothi veedhi, peerla panja veedhi, chakali atchanna veedhi,jonnakuti vari veedhi,bandhula doddi veedhi,
20			Turaka gudem area streets, baru vari veedhi, reddy vari veedhi,
21			Mekala vari veedhi, kota vari veedhi,vadde vari veedhi, vinjamuri vari veedhi, chittipantulu gari veedhi, karnam gari veedhi,
22			Kathulagudem area, Rasala harijinapeta area.
23			Cherukupalli vari veedhi, Malyalavari veedhi,
24			Murthy gari Hospital side road, Sakalaya cheruvu area
25			Narasingapuram Roadm Sivaaru area
26			Turpu peta area
27			Karivepaku peta, Seetayya harijanapeta
28			Ameenadoddi kaluva Area
29			Chittivani thota area, rajakapeta area
30			Agraharam CMC hospital area.

ANNEXURE-II (See Rule-4)			
List of Areas Prohibited for High Rise Buildings			
Sl. No	Ward No.	Block No.	Name of the Locality / Area
1	2	3	4
1			The following arrears / localities are categorized as arrears prohibited for high rise buildings in Pithapuram town, under rule 6 of A.P. Municipalities development control rules,2008 for the purpose of restriction of High rise buildings.
2			All old/existing, built up arrears/congested arrears /settlement (Gramakhanta) arrears mentioned in the item(A) except plots abutting the roads having width of 12mts and above.

RAJAHMUNDRAY MUNICIPAL CORPORATION			
ANNEXURE-I (See Rule-4)			
List of Old/ Existing Built-Up Areas/ Congested Areas/ Settlement/ Gram Khantam/ Abadi			
Sl.No.	**Ward No.**	**Block No.**	**Name of the Lociality / Area**
1	**2**	**3**	**4**
1.	5	27P	Laxmivarapu peta part,
2	10	88P	Vastralaya Housing Colony at Gadalamma Puntha road
3	13	45P	KNR Layout
4	19	2P,4P	Alcot Gardens part, Trindha Street.
5	2	4P,6P	Alcot Gardens,Trinadha Street Area, Kesari Club Street Area (Railway station road upto Kesari Club Street)
6	21	7P	Vullithota Street area
7	22	7P,8P,9P	Kambham Choultry Area, /Vullithota Veedhi Area, Vankayalavari Street, Gunduvari Street, ! Town Police Station back side area.
8	23	9P,10P	Gunduvari Street, Rangreeju Peta, Isuka Veeddhi, Water Works Area, Chanda Choultry Area.
9	24	31,32P,33 P,35P	Bestha Veedhi, Maya Bazaar, Meraka Street , Seethamma Sandu, Pappula Veedhi, Mochi Veedhi part.
10	25	33P,34P,3 5P	Kaspa Golla Veedhi, Grandhivari Veehi Area, Mochi Veedhi part Akulavari Veedhi, Training College back sie Area, Chintalavari Veedhi , Akulavari Street,
11	29	42P,43P	Routhu kalyana Mandapam area
12	30	30P,31P,3 2P	Bestha Veedhi
13	32	28P,29P	Lakshmivarapu peta part.
14	33	29P	Lakshmivarapu peta part.
15	34	11P,12P	Seshaiah Metta part.
16	36	19P,20P	Bavaji Matham Street, Tummalava part, Ramachandrarao peta (Back side of Swatantra Hospital)
17	38	17P	Aademma ibba (opp.Town High School)
18	40	12P,13P,1 7P	Reddila peta
19	41	14,15	Voota Lanks, Luthergiri
20	44	57P,58P	Vishalapuram
21	46	65P,66P	UTF Colony.

ANNEXURE-II (See Rule-4)			
List of Areas Prohibited for High Rise Buildings			
Sl. No	**Ward No.**	**Block No.**	**Name of the Locality / Area**
1	**2**	**3**	**4**
1.	1.	71P, 72P,	1. Bathina Nagar, 2. Cyclone Colony & Spinning Mill Colony 3. Subbaraopeta at Lalacheruvu 4. Narayanapuram Extension, 5. Narayanapuram part
2	2	73P	Narayanapuram part
3	3	48,49	6. Subbaraopeta Opp Arts College, 7. Nehru Nagar 8. Rajendra Nagar (part)
4	4	50,51,52,53	Rajendra Nagar Part
5	5	26P	9. Kambalapeta
6	6	44P	10. Cementry Peta -2 11. Annapurnammapeta East
7	7	76P	12. Gorakshana Peta -1 part
8	8		
9	9	82P	13. Burma Colony
10	10	85P,88P	14. Morampudi, 15. V.L.Puram-1
11	11	80P,86P	16. V.L.Puram-1 17. Jayasree Gardens
12	12		
13	13	45	Gorakshana PEta – 1 part 18. Gorakshanapeta -2 19. Ambethkar Nagar-1

			20. Ambethkar Nagar-2
14	14	45	21. Cemetry Peta -2 22. Sarada Nagar (KKR Layout) 23. Brodipeta Part
15	15	45	Brodipeta Part
16	16	3,41	24. Balajipeta 25. Veerabhadra Nagar-1 26. Veerabhadra Nagar-2
17	17	2,90	27. Boggula Dibba 28. Swarajya Nagar 29. RCM School, Church
18	18	2	30. Bathinavari Street 31. Alcot Gardens part
19	19	2	Alcot Gardens part
20	20		
21	21		
22	22	7P,8P	
23	23		
24	24	30P,32P	
25	25		
26	26		
27	27	37P	32. Krishnarao Peta
28	28	40P	33. Sigideela peta 34. Goleela Dibba
29	29	42P	35. Gubelu peta
30	30	30P,43P	36. Medara peta 37. Church peta
31	31	44P	38. Annapurnammapeta 39. Maanasingh peta
32	32		
33	33	29P	40. Jampeta Harijana Wada
34	34	11P,12P	
35	35	20P,21	
36	36	19,20P	41. Aademma Dibba
37	37		
38	38		
39	39	18	42. Krishna Nagar 43. Lingampeta
40	40	13P,17P	44. Bruhannalapeta 45. Seethampeta
41	41	13P,14	46. Kotilingalapeta
42	42	15P,16P,23P	47. Ratanampta 48. Municipal Colony part
43	43	24P,56P,57P	49. Weavers Colony & Vidya Nagar 50. Mallikarjuna nagar part
44	44	57P,28P,59P	Mallikarjuna nagar part 51. P&T Colony 52. Venkateswara nagar
45	45	64P,65P	53. Gadireddi Nagar 54. Indira Nagar
46	46	65P,66P	55. Venkatapuram 56. Ananda Nagar 57. Ramadasu Peta 58. Ramadasupeta Extension 59. Ananda Nagar Extension
47	47	60,61P,62,53	60. Eswara Nagar 61. Mehar Nagar 62. Padmasali Peta 63. Sarangadhara Metta 64. Sarangadhara Metta HarijanaWada 65. Seshagiri Nagar 66. Siddardha Nagar
48	48	58P,61P	67. Sanjeevayya Nagar
49	49	67	68. Subbarao Nagar, 69. Simhachala Nagar
50	50	68P,69P,70P	70. Chowdeswara Nagar 71. Suviseshapuram 72. Durga Nagar 73. Lalacheruvu
			HIGH-RISE BUILDINGS

			Main Road from 1 Town Police Station upto Fire Station
			Old GNT Road from Lalacheruvu Junction to Kambala Cheruvu Junction
			Morampudi Road Thadithota Junction to Municipal Limits via NH-5
			A.V.Apparao Road from Seelam Nookaraju Factory road Junction to NH-5
			Seelam Nooka Raju Factory Road from A.V.Apparao Road Junction to Ayyappa Nagar
			J.N.Road from Ramalayam Junction to NH-5
			Tilak Road from J.N.Road Junction to Morampudi Road Junction
			Somalamma Puntha Road from Ramalayam Junction to Morampudi Road Junction
			All Bank Colony Road from Tilak Road Junction to NH-5 Junction
			Danavaipeta Main Road from A.V.A.Road Junction to Ganesh Chowk Junction
			Danavaipeta (Chinna Gandhi Bomma Street) From A.V.Apparao Road to Bye-pass Road Junction
			Danavaipeta Puntha Road from Nandam Gani Raju Junction to Addepalli Colony Junction
			NH-5 road passing through Rajahmundry Municipal Corporation limits
			Bye-pass road from Y-Junction to Thadithota Junction
			Korukonda Road from Kambala Tank Junction to Municipal Limits
			Katheru Road from Fire station to Municipal Limits
			Bhavana Rushi Temple Street from Devi Chowk to Seethampeta Park Junction
			Kandakam Road from Pushkarghat to Madduri Annapurnayya Park Junction

RAMACHANDRAPURAM MUNICIPALITY			
ANNEXURE-I (See Rule-4)			
List of Old/ Existing Built-Up Areas/ Congested Areas/ Settlement/ Gram Khantam/ Abadi			
Sl.No.	**Ward No.**	**Block No.**	**Name of the Lociality / Area**
1	**2**	**3**	**4**
1	1		Golusumilli Street, Harijanapeta, Salipeta, Settibalija peta, Kotturu adhiandhar peta.
2	2		Settibalija peta, gulla vari peta, still well peta, harijana peta, salipeta.
3	3		Ankam vari street, Gundappa vari street, Koppi Setti vari street, Eatha vari street, Bandaru vari street, Vadrevu vari street, Thupru peta, Pillavari street, Chogindi vari street.
4	4		Kota peta, Adi Andhra peta, Pillavari street, Chegondi vari street, Medharla street.
5	5		Adi Andhra Peta, C.K. Railway Gattu Kota, Raja Babu Nagar, Y.S.R.Nagar , C.K. Railway gattu, Kakinada road.
6	6		A.P.S.E.B. Seelam vari savaram, Pithani vari street, Pampana Suramma street, C.K. Railway Gattu, Pampana Veeramma Street, S.Nageswar Rao street, P.Venkanna street, P.Suranna street
7	7		C.K. Railway Gattu, Ganesh Nagar Seelamvari street, Padalvari street, Tjoram vari Street, Gangumallavari Street,
8	8		Pilla veeraju Street, Jalli vari peta, Shanthi Nagar, Akula Narayana murthyvari Street,Puntha Malapalli, Thota vari Street,
9	9		Challa peyyavari Street,, Chaganti vari Street, Statebank Street, M.R.O. Office Street,Pendyala vari Street, Brodipeta, Turpupeta, Thotavari Street, Ch. Papamma Street, Vinayaka temple Street, Rajgopal Street,
10	10		Puntha Road, Scavanges Colony, Kethavari Street, Thotavari Street, Chinamasedu Street, Pyavari Street, Brodipeta
11	11		Thotavari Street, Neralla vari Street, Konda vari Street, Chaganti vari Street, Potula vari Street, M.R.O. Office Street, S.B.I Road, Brodipeta, Chinamasedu Street,Chegondi varistreet, Magantivari Street, Turpupeta Kundrapuvari Street, Police line Street.
12	12		Chaliki Suryarao vari Street, Sree Ram peta, Chinna Maszid Street, Brodipeta, Chinamasedu Street, Official Colony.
13	13		Rice peta, Dandugangamma Street, Jahangeer Street, Rapakacari Street, Kondapalli vari Street, Devangula Street, Punna vari Street, Addala vari Street, Mangala Street, Veerraju Master Street, Potulavari Street, M.D. Sharif Street.
14	14		Gangula Musalayya Street, Kovva gattu, Kola Chandra rao Street, Jaivari Street, Chappidi vari Street.
15	15		Dandugangamma Street, Ayanna Mastaru Street, Pasupuleti vari savaram , Pedi Reddy vari Street, Chappidivari Street.
16	16		Adi Andhra Peta. Settibalija peta, Harijana peta, R.K. moga, Kapu street, Nallavari Street, Gopayya Street, Shivalayam Street, Devangula Street, Rajula garuvu.
17	17		Gundu Bogula Street, Kavalavari Street, Kapula vari Street, Devangula Street, Rajaka peta, Gollavari Street, Ramalayam Street, Muchimilli.
18	18		Settibalija peta, Agni kula Shantiyula Street, Pasalapui Canal Road, Harijanapeta, Banglow thota, Leprosy Colony, Munisib Street, Puntha road V.Tatabai Street, Ramalayam Street, Pillavari Street, Vankavari Street, Pallipeta.
19	19		Munisib Street, Puntha road, Harijanavada.
20	20		Pudigallavar Street, P.Venkata rao Street, Rajugari Thota Street, Rajugari Street, Koti Krishna Street, Jammivari Street.
21	21		Dafedar Nuyyi Street, Kondapalli vari Street, Pothula vari Street, Gudigallavari Street, P.Venkata rao Street, Rajugari Thota Street,P.Adhinarayana Street,
22	22		Bandaru vari Street, Duvvuri vari Street, Mumma Reddy vari Street, Market Street, Challavari Street, Pedapativari Street, Bandaru vari Street,B.Narasaraju Street, Mulagapati vari Street, Shivalayam vari Street, Shivalayam south side road, Lakshmi Narayana rao Street,
23	23		Setti Balija peta, Gopi Setti vari Street, Naidu vari Street, S.Satthiraju Street,Padham vari Street,, Kacheri chavidi Street, Challavari Street,

24	24		Raja lakshmi vari Street,Chakalli peta, Yerukali Street, Dhamu kondavari Street,Slaughter house Street,Market Street, Ramadurga Street, Naidu vari Street,Challavari Street, Pedapati vari Street,
25	25		Naidu vari Street, Golla Tata rao vari Street, Golla peta, Market Street,Golladonkalu Street, Talam Street, M.Kamaraju Street,
26	26		Settibalija peta, Unupula vari Street, Gubbala vari Street, Kacheri savidi Street,Kanchivari Street,
27	27		Chakali peta, Church Compound, Golladonkalu Street, Gubbalavari peta, Ramadurga Street, Kristina peta.

ANNEXURE-II (See Rule-4)			
List of Areas Prohibited for High Rise Buildings			
Sl. No	**Ward No.**	**Block No.**	**Name of the Locality / Area**
1	**2**	**3**	**4**
			All the congested areas and localities mentioned in the item (1) & (2) except the plots abutting Draksharama road, D.U. Road (Main Road) and Kakinada road. The following areas and localities are cataegorized as areas prohibited for High Rise buildings in Ramachandrapuram town under rule 6 A.P. Municipalities development control rules 2008.

SAMALKOT MUNICIPALITY

ANNEXURE-I
(See Rule-4)

List of Old/ Existing Built-Up Areas/ Congested Areas/ Settlement/ Gram Khantam/ Abadi

Sl.No.	Ward No.	Block No.	Name of the Lociality / Area
1	2	3	4
1	1	11	Karapa Tank , Behind SBI
2	2	1	Kandakam Area
3	3	1	Pension line, Government Hospital Area
4	4	2	Kota Bazar area, Kotalamma Tank
5	5	3	Brown peta, Kummari Street, Pasuvulamma Temple area
6	6	4	Uppuvari Veedhi, Thota vari Veedhi.
7	7	7	Chakalipeta, Seethaphala Doddi, Telukulapunta
8	8	4	Sarada Devi School Area, Chandra Sekhar Temple Street
9	9	2	Pallipeta, No.1 Market Area, Peerla Panja Road area
10	10	6	Patrula Street, Chandra Sekhar Temple Street area
11	11	6	Patrulapeta, Kothakota vari street area, Adi Andhra Peta.
12	12	9	Yarlagadda vari street area, Venus Convent Area.
13	13	8	Sangeetatharaopeta, Munula Theerdham tanka area
14	14	7	Balusula peta, Golla peta
15	15	7	Balusulapeta, Indira Colony
16	16	16	Veeraraghava Puram
17	17	1	Veeraraghava Puram, karapa cheruvu area.
18	18	1	No. 2 Market Area
19	19	13	Chaliki vari street area
20	20	12	Chinna veedhi area, Kotha Doddi Area
21	21	8	Adi Andhra Peta
22	22	16	Appayya Tank area, Behind Jayalakshmi Takies area
23	23	14	Setti Balija Peta
24	24	16	Appayya Cheruvu
25	25	16	Narayya Peta
26	26	17	Velama Peta
27	27	17	Velama Peta
28	28	-	-
29	29	18	Bhasakara Nagar
30	30	18	Sai Nagar , Quarry Gothulu

ANNEXURE-II
(See Rule-4)

List of Areas Prohibited for High Rise Buildings

Sl. No	Ward No.	Block No.	Name of the Locality / Area
1	2	3	4
NIL			

YELESWARAM NAGARA PANCHAYAT

ANNEXURE-I
(See Rule-4)

List of Old/ Existing Built-Up Areas/ Congested Areas/ Settlement/ Gram Khantam/ Abadi

Sl.No.	Ward No.	Block No.	Name of the Lociality / Area
1	2	3	4
1		1	Road in Market Area, Cheruvugattu Line
2		2	Malakondayya Hospital Street, Road Opp. To Union Bank
3		3	Thota Streets, Jami Vari Street
4		4	RCM Church Back side roads, Pydimallamma gudiveedi, Gedda veedhi, Ramalayama Street
5		5	Mandula Colony Streets, Vengalarao Colony Streets

6		6	Lingavaram Colony Streets, Kambalapalem Colony Streets, Makkarevu Colony Streets
7		7	Jangalavari Veedhi, Settibalijapeta Streets, Lacharao Colony Streets, Neelipeta Streets, Pallapuveedhi, Ramalayam Veedhi, Yerukulavari Street
8		8	Appannapalem Streets, Kotha Colony Streets
9		9	Samanthula vari Streets Vaguvaristreet, Old Post Office Street, Saibaba Street, Vankayalavari Street, Kothavari Street, Laireddy Vari Street
10		10	Relli Peta, Chachatipeta, Police Station Opp. Veedhi
11		11	Gunapuvari Veedhi, Lankavari Veedhi, Chakali peta, Old Current Office Veedhi, Santhoshimatha Temple Street and Reservoir Project Road
12		12	Gollapeta Streets, Sai Nagar Streets, Sidagam Vari Street
13		13	
14		14	Lakkavaram Colony Streets Nagarjuna Convent Road, Devudi Manyam Streets, Kummara Veedhi, Subbayyampeta Streets
15		15	Gollalametta road streets, Cachati Peta streets, AMG School Area liine
16		16	Chchati peta Street, Kannayyapeta Street, Badireddy Vari Street, Ambedkar Nagar line.
17		17	Sitaramaraju Colony Streets, Chaitanya Nagara Streets
18		18	Rajahmundry Colony Streets, Quarry Peta Streets, Santhi Nagar Road, C. Rayavaram Colony Streets
19		19	State Bank Colony Streets, RTC colony Streets

ANNEXURE-II (See Rule-4)			
List of Areas Prohibited for High Rise Buildings			
Sl. No	**Ward No.**	**Block No.**	**Name of the Locality / Area**
1	**2**	**3**	**4**

TUNI MUNICIPALITY			
ANNEXURE-I (See Rule-4)			
List of Old/ Existing Built-Up Areas/ Congested Areas/ Settlement/ Gram Khantam/ Abadi			
Sl.No.	Ward No.	Block No.	Name of the Lociality / Area
1	2	3	4
1			Drivers Colony, Relli Colony, Dobhi Colony, Kartalla Road, Thandava Siva Lingala Road.
2			Tailors Colony, Kondavaripeta, Viswa Brahmin Colony (Part)
3			Gedapevari Street, Melavari Street, Gonevari Street, Arugula Street, Viswabrahmin colony (Part).
4			Weekar Section Colony, B C Hostel Road, Arugula vari veedhi, Viswabrahmana colony.
5			BC Hostel Road, Viswabrahmana colony, Chandakavari street, Appireddy Vari street, Machavarapu vari street, Satyasai veedhi, Gottumukkalavari street, Sitaramapuram Main Road.
6			Gottumukala vari veedhi, Seetaramapuram street, Samanangivari street, TB Road, Seetaramapuram main road, School Road, Ammajipeta main Road, Panthulu gari Street, Killadavari layout.
7			Kankipativari road, Ammjipeta Road, Cattle Market, Panthulugari veedhi, Tirumala Raju gari veedhi, Kankipativari garuvu
8			Ammjipeta main road, Cattle market Road, Yenugula vari veedhi, Acharigari thota, Tenevariveedhi, Uppalapativari veedhi,
9			T.B. Road, Ammjipeta cross road, Pudi appanna gari veedhi, Athukuri Kamaraju gari veedhi, Yenugula vari veedhi.
10			Karri veerajugari veedhi,Appireddy vari veedhi,Rail Nagar, Pothulavari veedhi, Chopavari veedhi, Dharamarajugari veedhi, Sitarampuram main Road, Goods Shed Road, TB Road, Ashramveedhi.
11			Tarakaramanagar, Pasuvulasantha road, Railway Quarters, Railway Station Road, Railway Quarters, RS Peta.
12			Medarapeta, Nakinaveedhi, Ravada Veedhi, Peddaveedhi, Settibaligila veedhi (Yetivoddu Veedhi) Mekala Revu Veedhi.
13			Prakasam Road, Vadapalli narayanaraju gari veedhi, Post Office Veedhi, Andhra Ratna Road, Eranki vari veedhi, Dandem Vari Vedhi, Gollapallivari veedhi, Killadavari veedhi, Sunkara vari veedhi, Garuvu Veedh, Pitalvari veedhi, Market main Road, Settibaligiveedhi, Anasuri vari Veedhi, Vasamsetti vari veedhi, Sunkara vari veedhi, Feedar veedhi, Gaddibazar, Tenevari veedhi.
14			Prakasam road, Police Quarters , Lakshmi Lodge Road, Cinema Road, Santhi Nagar Main Road, Santhi Nagar, MR Peta main road, Lalbahadoor Sastri Road,
15			Anjeneyaswamy gudi veedhi, Muslim veedhi, TCMS Road,
16			Killadavari veedhi, Samithi office veedhi, Durga Das Gari veedhi, Yenamala vari veedhi, Red Convent Veedhi.
17			Ramakovelaveedhi, Tirumalaneedi vari veedhi, Ravada vari veedhi, Jakkulavari veedhi, Kanchara veedhi, Gollapeta, Sammangi vari veedhi, Sivalayam veedhi, Gavarapeta Kotaveedhi, Gavarapeta main road.
18			South side balaji road, Geddamoori veedhi, Tirumalaneedivari veedhi, Dasaribyragivari veedhi, Raja vari veedhi, Pallapuveedhi, Gavarapeta.
19			Bellapuveedhi, Mondiveedhi, Medaraveedhi, Badava veedhi, Bandaru Kondalarao veedhi, Pathabazar veedhi, Balaji Road, South side Pedda veedhi, Chinna veedhi, Bellapu veedhi, Mondi veedhi. Buddiga vari veedhi
20			Buddiga Kalika Murthy veedhi, Namagiri vari veedhi, Tene bulliyya gari veedhi, China Panda veedhi, Peda panda veedhi, Odali bangaramma veedhi, Mukthi lingayya gari veedhi, North side Addala Veedhi , North side of Challa vari veedhi, East Side Patha bazaar veedhi.
21			Kotvala vari veedhi, Isakalapeta, South side of Challavari veedhi, Pathabazar veedhi road,Illavari veedhi.
22			Pathabazar veedhi road, Mandapati vari garuvu, Agraharam veedhi, Nookalamma gudi vadda Tank, South side of Addala veedhi, Achanta vari veedhi, Juvvala vari veedhi, Illa vari veedhi, East side Patha bazaar street.

23			Nookalamma puntha road, Kotha Isakala Peta (Jyothi Nagar) Upparagudem, RamakrishnaNagar, Ambedkar Nagar Colony.
24			Gavarapeta Kanachara veedhi, East side Sivalaym veedhi, East side Kotha veedhi Gavarapeta, Chadaram vari veedhi, Gavara peta main road, Budda Vissanna gari veedhi, Eepuri vari veedhi, Ponnada vari veedhi, Padamata side Nookalamma punatha road.
25			North side Kotha suravaram road, Gandhi Nagar, Arugula vari veedhi & Chittama Street, Undrasu vari veedhi, School Veedhi, Bodapati Sanyasi Veedhi, Koorapati vari veedhi, Bodapati vari veedhi, Urla vari veedhi, Urla vari veedhi.
26			South side Killada vari veedhi Batai thota veedhi, North side Vadaplli rathappa gari veedhi, Mamidi Subba Rao Gari veedhi, Kotha Suravaram Road, KothaPeta.
27			Kadhi Bandar veedhi, Mpl Colony, Eagalavari veedhi, Eagala appalaswami veedhi, Allada polarao gari veedhi, Guntur Jaganadham veedhi, South side Vadapalli, Rathappagari veedhi. West side Kotha Suravaram puntha road.
28			MR Peta, Karrivari veedhi, MR Peta, Vinayaka Temple street, Kucharlapati Venkatapathi Raju gari veedhi, Pemumanchivari veedhi, Jampanavari veedhi, Komakulavari veedhi, Bullibabugari veedhi. Satyasai veedhi, Ramalayam veedhi, Veldivari veedhi, Nandhavarapuvari veedhi, Ramakovela veedhi, Market Yard.
29			Vinayaka Temple Street, Kachhalavari Sandhu, Pillavari Veedhi, Pandranki vari veedhi, Bogarapu Pentaiyagari veedhi, Koradavari veedhi.
30			Vinayakagudi veeedhi, Pillavari veedhi, Sainagar, Anjaneyarajugari veedhi, Kuchharlapati Venkatapathi Raju gari veedhi.

ANNEXURE-II (See Rule-4)			
List of Areas Prohibited for High Rise Buildings			
Sl. No	**Ward No.**	**Block No.**	**Name of the Locality / Area**
1	**2**	**3**	**4**
1			The following areas and localities are categorized as areas prohibited for High Rise buildings in Tuni Town under Rule 6 and 7 of Revised common Building Rules 2006 extended to Visakhapatnam Urban Development Authority, Visakhapatnam.
2			All the congested area and localities mentioned in the item (1) :& (2) except the plots abutting Old G.N.G. T. Road, Penta Kota Road, (Main Road) S.A. Road and Bypass Road.

GUDIVADA MUNICIPALITY			
ANNEXURE-I (See Rule-4)			
List of Old/ Existing Built-Up Areas/ Congested Areas/ Settlement/ Gram Khantam/ Abadi			
Sl.No.	**Ward No.**	**Block No.**	**Name of the Lociality / Area**
1	**2**	**3**	**4**
1	1,2,3,	10	Nagavarappadu area right side, Merugumala Veedhi, Bommarillu Theatre North side Road.
2	4	9	1) Karedla Ramaiah Street 2) Chinna Sivalayam Street Eastern side Road. 3) Kranthi Transport Road. 4) Oriental Insurance Office Road. 5) H.P.Gas Company Road, Adeepalli Complex Road.
3	5 & 6	8 & 9	N.T.R. Colony (Slum), Gowri Sankarapuram, Srirampuram
4	7 & 8	6	Kothapeta (Naganna Bavi Area), Peddaveedhi Area, Scavengers Colony
5	9	7	Market Road (East) side Area, Jain Temple Area, Paravidyasramam Road,
6	10 & 11	5	Eastern side of Valavarthipadu, Kummari Cheruvu Area, Maseed Area,
7	12, 13, 14 & 15	1	Goodmenpeta, Bapuji Nagar, Panchavati Colony, Old Bye-Pass Road East side.Nizampeta.
8	17	3	Mareedvari Veedhi, Bokkavari Veedhi, Devarakonda Vari Veedhi, Yerra Baddi Veedhi, Girls High School Road area.
9	18	4	Ganganamma Temple Area, Medara Bazar Area, Geetha Bhavan Area. Kakarla Veedhi area,
10	19, 23 & 24	15 & 16	Satyanarayanapuram, Anjaneyapeta, Kothapeta, Bayyavari Street.
11	20,21, & 22	17 & 18	Chowdari peta, Slaterpeta, Mandapadu, Adarsa Nagar, Railpeta, Karmikanagar (Slum).
12	25	18	Pedayerukapadu (Slum)
13	26	18 & 19	Karmikanagar, Bethavolu (Part), Chenchupeta (Slum)
14	27 & 28	19	Bethavolu, Indiranagar Colony, Pedapeta
15	29 & 30	20	Bethavolu,Dhaniyalapeta, Asramam Area, Karmikanagar (Part)
16	31	13 & 14	Patimeeda, Railpeta (Railway Station), Maddivari Veedhi, Bhaskar Talkies Area
17	33, 34, 35 & 36	11, 12 & 13	Leela Mahal Road Area, Venkatarao Hotel East & West Area, Kaikalavari Veedhi Area, Tailoring Street Area, Ratnamala Veedhi Area, Nagavarapadu Area.

ANNEXURE-II (See Rule-4)			
List of Areas Prohibited for High Rise Buildings			
Sl. No	**Ward No.**	**Block No.**	**Name of the Locality / Area**
1	**2**	**3**	**4**
1	1 & 2	10	Nagavarappadu
2	2 & 3	10	Teachers colony, Kakathiya nagar, 80' Bye Pass raod Both sides
3	4 & 5	10, 9 & 8	Rajendranagar, Sri Rampuram, Santhi Nagar, Gowrisankar Puram
4	19	16	Satyanarayanapuram (Part)
5	20	17	Chowdarypeta, R.T.C Colony, S.B.I. Colony
6	30	2	Ashramam colony
7	35	11	Kapu Kalyanamandapam area
8	36	11	Vasavi Nagar, Nagavarappadu
9	32	13	Jaganadhapuram, Gangadhara Puram, Patmeeda (Part)

JAGGAIAHPET MUNICIPALITY

ANNEXURE-I
(See Rule-4)

List of Old/ Existing Built-Up Areas/ Congested Areas/ Settlement/ Gram Khantam/ Abadi

Sl.No.	Ward No.	Block No.	Name of the Lociality / Area
1	2	3	4
1	19	10	Harijanawada, Western side of the town
2	20	10	Indira colony at new Harijanawada area
3	21	9	Thotagudam Area
4	17, 18	11	Mittagudem area
5	18	11	New Mittagudem area
6	16, 17	11, 12	Mangali Bazaar
7	18	11	Golla bazaar, Mittagudem
8	14, 15	13	New Nagamaiah bazaar
9	14	14	Chakali Bazaar
10	13	15	Wiliampet
11	11	1	Mutarasu bazaar
12	9, 10	3	Vaddara bazaar
13	6	6	Chintalathopu
14	2, 5	6	Y.Y.Colony
15	1,2,3	6	Kakani nagar
16	3	6	Venkatagiri gutta
17	22	8	Ayyappa nagar
18	7	5	Durga nagar
19	7	5	Vidya nagar
20	6	6	Vepalavagu
21	22	8	Satyanarayanapuram
22	11	14	Bangarupet
23	18	11	Karralagudem
24	13	15	Padmavathi nagar
25	9	3	Existing thickly built up are at Cheruvu bazaar, Kagitala bazaar, Muthyalamma temple, Uppala vari street, Ramalayam street, Pugaku veedhi, Vinayaka street, Devarasetty vari street, Dasara bazaar.
26	12	2	Markendiyaswamy street, North salela lane, South salela lane, Waradaraju swami temple area, Todda shop line.
27	15	13	Annavarapu vari street, Digudubhavi line, Kottamudi vari lane, Addala bazaar, Brahmana bazaar, Anjaneya swamy temple area.
28	21	9	Thota bazaar, Ramamandiram block side
29	8	5	Golla bazaar, Sitaramapuram area.

ANNEXURE-II
(See Rule-4)

List of Areas Prohibited for High Rise Buildings

Sl. No	Ward No.	Block No.	Name of the Locality / Area
1	2	3	4
1	17	12	Mangali bazaar, Katika bazaar
2	9	3	Kagitala bazaar
3	14	14	Chakali bazaar
4	15	13	Brahmana bazaar
5	21	9	Thota bazaar
6	18	11	Mittagudem
7	12	1	Markendia swamy temple street
8	16	12	Akalavari street
9	10	3	Uppalavari street
10	17	11, 12	Kamsali bazaar

MACHILIPATNAM MUNICIPALITY

ANNEXURE-I
(See Rule-4)

List of Old/ Existing Built-Up Areas/ Congested Areas/ Settlement/ Gram Khantam/ Abadi

Sl.No.	Ward No.	Block No.	Name of the Lociality / Area
1	2	3	4
1	37	9	Palakurthivari lands
2	27	1	PKM Nagar (Opp. To Sarada Nagar)
3	34	9	Kummaragudem
4	40	14,12	Rustumbada

5	1	15	Medara Colony.
6	20	27	Pataramanapeta
7	24	30	Chinna Vullingipalem
8	37	9,13	Balaramunipet Vaddra & S.T.Colony
9	18	31,32	Sakal Nagar (Gilakaladindi)
10	29	2	Desaipet (Muslim Area)
11	24	30	Peda Vullingipalem
12	4	19	Circarthota
13	38	14	Narayanapuram
14	38	14	Pambalagudem
15	30	4	Rajupet – Harijanawada
16	30	4	Maggala Colony
17	15	25	Buttaipet
18	11	21	Parasupeta
19	37	9	Balaramunipet – S.C. Colony
20	37	9	Balaramunipet – Yerukula & Yanadi Colony
21	1	15	Anandapet
22	16	30	Malakapatnam
23	7	20	Lakmanarao puram
24	25	29	Amruthanagar
25	23	28	Circlepeta
26	31	4	Rajupet – Muslim Area
27	29	23	Champacheruvu
28	29	23	alyalagudem
29	25	29	Ogispet – Harijanawada
30	29	2	Desaipet – Harijanawada
31	16	30	Rickshaw Drivers Colony (Behind Govt., Hospital)
32	39	13	Yadavulapet (13th Ward)
33	26	1,2	Kalekhanpet
34	34	8	Kasanigudem
35	9	21	Karagraharam Road – Yerukula Colony
36	42	14,15	Edepalli – Ganganamma Temple Area
37	34	7,14	Godugupeta
38	28	2	Desaipet – Gaddi Bazar
39	19	30	Mustakhanpet
40	2	16	Pattabhipuram
41	7	20	Viswabrahmana Colony
42	8	21,30	Railpet (Old Rly., Station Area)
43	17	31,32	Bandarkota
44	27	1	Saradanagar
45	2	15	Machavaram
46	19	30	Chitti Bombai
47	1	15	Devudu Cheruvu
48	8	21	Bhaskarapuram
49	17	31	Rajaratnapuram
50	1	15	PKM Nagar – Edepalli
51	32	4,9	PKM Nagar – Kasanigudem
52	25	29	Ogispet – Sweepers Colony
53	38	14	Endowment Land
54	42	14	Mandulagudem
55	3	16	Rajakas Colony – Valandapalem
56	28	2,1	Yanadula Colony – Warf
57	19	30	Jammidoddi Slum
58	29	2	Desaipeta – S.C. Colony
59	18	31,32	Bandarkota – II
60	17	30	Y.S.R. Colony
61	23	28	Gadidulapet
62	23	28	Jalapeta (Lakshminarasimha Swamy Temple Backside)
63	21	6	Jawarpet – Tekya
64	26	1,2,29	Chintaguntapalem
65	36	9	Gandhi Vidhyalayam Area
66	32	4	Kesavarao Thota
67	39	14	Nizampeta
68	37	9	Rajiv Nagar
69	37	9	Khanala Colony
70	39	13	Nizampeta – Kapusangam Doddi
71	2	16	Market yard Backside
72	11	18	Sukarlabad Gowda, Yadavula & Erukula Colony
73	42	15	Gumastala Colony

74	3	16	Valandapalem – Gangulathota
75	3	16	Painters Colony
76	5	20	Circarthota – II
77	7	20	Chilakalapudi – Harijanawada
78	42	14,15	Drivers Colony
79	38	14	Sundaraiah Nagar
80	42	14	Narayanapuram – II
81	8	21	Adarsh Nagar
82	27	1	Sivaganga Area
83	27	1	Kalyan Nagar
84	15	25	Buttaipet
85	15	25	Buttaipet (Aravagudem)

ANNEXURE-II
(See Rule-4)

List of Areas Prohibited for High Rise Buildings

Sl. No	Ward No.	Block No.	Name of the Locality / Area
1	**2**	**3**	**4**
1	Vijayawada Road		
2	Ravindranath Tagore Road (main road)		
3	Kennedy Road		
4	Noble Road		
5	Parasupet Road		
6	S.B.I.Road		
7	Port Road		
8	Zilla Court Road		
9	By-pass Road		
10	Wild Forest Road		

NANDIGAMA MUNICIPALITY			
ANNEXURE-I (See Rule-4)			
List of Old/ Existing Built-Up Areas/ Congested Areas/ Settlement/ Gram Khantam/ Abadi			
Sl.No.	**Ward No.**	**Block No.**	**Name of the Lociality / Area**
1	**2**	**3**	**4**
1	--	7	NTR Road area
2	--	6,7	Krishi College Road area
3	--	11, 12	Netaji Nagar area
4	--	10, 11	Old Kakatiya School Road area
5	--	33, 38	Anasagaram area
6	--	27	Sri Ram Nagar area
7	--	39	D.V.R. Colony area
8	--	40	Hanumanthapalem area
9	--	31	Ashok Nagar area
10	--	14	Yadavula Bazar area
11	--	1, 2	Behind RTC Bus Stand area
12	--	5	Mukkapati Colony area
13	--	30P, 31P	Cheruvu area
14	--	5	Krishna Balija nagar
15	--	5, 6	Putta Road area
16	--	24	Chakrala Bazar area

ANNEXURE-II (See Rule-4)			
List of Areas Prohibited for High Rise Buildings			
Sl. No	**Ward No.**	**Block No.**	**Name of the Locality / Area**
1	**2**	**3**	**4**
1	--	--	N.H. 65 which passing through the town
2	--	--	New by-pass road
3	--	--	Chandarlapadu Road
4	--	--	Old By-pass road

NUZVID MUNICIPALITY			
ANNEXURE-I (See Rule-4)			
List of Old/ Existing Built-Up Areas/ Congested Areas/ Settlement/ Gram Khantam/ Abadi			
Sl.No.	Ward No.	Block No.	Name of the Lociality / Area
1	2	3	4
1	1	23	Koppulavelamapeta, Varimallu area, M.R.Apparao Colony, Indiramma Colony
2	2	22 & 23	Behind Telephone Exchance area, Koppula velamapeta, Bank Street Area, Muslimpeta area
3	3	22 & 24	Konerupeta
4	4	24	Bondilipeta
5	5	8, 20, & 21	Area between Venkateswara Kovela road and Machilipatnam-Nuzvid road, Gandhipark road, DAR College road, area between P.G.Centre road and Bank Street
6	6	20 & 25	Area between DAR College road and Dwaraka theatre road, Pothureddipalli road area
7	7	25	R.R.Peta, Indira Colony, Pothureddipalli road area
8	8	25	Indira Colony
9	9	18 & 19	Ammavari thota, Sutharla Rama Mandiram Street area, Moghal tank area, Vidyanagar
10	10	17 & 19	Aryula bazaar, Sutarla Ramamandiram street area, Ammavarithota, Jangalapeta
11	11	18	Vidyanagar, Bapunagar, Aryula bazaar, Ammavarithota, Nayudugari street
12	12	18	Bapunagar, Surisettivari Thota
13	13	17 & 18	Bapunagar, Krishnareddy Colony
14	14	7	NTR Colony
15	15	7	Nandamuripeta, Area between bus-stand road and Venkateswara Temple road, Rajakapeta road, Sivalayam Street
16	16	4 & 6	Rajakapeta, Sibbandipeta, Samathanagar
17	17	3 & 6	Nehrupeta, Kotavarigudem, Nandamuripeta, Samathanagar
18	18	1 3 & 4	Nehrupeta
19	19	1 & 2	Azaraiahpeta
20	20	4	Kummaripeta, Dum-Dum gardens, Azaraiahpeta
21	21	5 & 13	Muslimpeta, Yadavula bazaar
22	22	11 & 13	Five bazar street areas
23	23	2 & 5	Yanadula Colony, Rellipeta, Azaraiahpeta, Kotapadu estate road
24	24	9	Gandhinagar, Vuyyuru estate area
25	25	9, 10 & 12	Goduguvarigudem, Nayanagari Colony, Gandhinagar, Dilkushnagar
26	26	12	Danamthota area, Station thota area
27	27	12	Station thota area, Pedda Cheruvu area
28	28	12 & 15	Bhuvanagiripeta, Rajakapeta
29	29	14 & 15	Bhuvanagiripeta, Rajakapeta, area behind Tataiahbabu Nursing Home
30	30	15 & 16	Rajakapeta, Peda Cheruvu area, Velamapeta areas

ANNEXURE-II (See Rule-4)			
List of Areas Prohibited for High Rise Buildings			
Sl. No	Ward No.	Block No.	Name of the Locality / Area
1	2	3	4
1	1 & 2	23	Thurpupeta, Velamapeta
2	1 & 2	23	Velamapeta
3	3	24	Konerupeta
4	4	24	Bondilipeta
5	7 & 8	25	Ramayammaraopeta
6	10	17	Jangalapeta
7	10 & 11	17 & 18	Kothapeta
8	12 & 13	18	Bapunagar
9	14 & 15	7	Padmasali and New Chakalipeta and NTR Colony
10	16 & 17	6	Nandamuripeta and Sibbandipeta
11	17 & 18	3	Kotavarigudem
12	18 & 19	1 & 3	Nehrupeta
13	18 & 19	1, 2 & 4	Azaraiahpeta
14	19	1	Azaraiahpeta New Colony

15	20	4	Kummaripeta
16	21 & 22	13	Yadavulapeta
17	21 & 22	5 & 11	Muslimpeta
18	19 & 23	2	Harijanapeta and Rellipeta
19	23	2	Yanadula Colony
20	25	10	Goduguvarigudem
21	27	12	Danimmathota
22	28, 29 & 30	15 & 16	Rajakapeta
23	29	14	Bhuvanagiripeta
24	1	23	M.R.Apparao colony
25	7	25	New Yanadula Colony
26	14	7	NTR Colony

PEDANA MUNICIPALITY			
ANNEXURE-I (See Rule-4)			
List of Old/ Existing Built-Up Areas/ Congested Areas/ Settlement/ Gram Khantam/ Abadi			
Sl.No.	Ward No.	Block No.	Name of the Lociality / Area
1	2	3	4
1	2	7	tamara cheruvu area
2	6	5	harinawada area
3	7	17	verabadra puram
4	8	17	joganadarao colony
5	9	17	kanuru weavers colony
6		17	T.T.palem
7		17	rajiv colony
8	10	17	N.T.R colony and chenchula colony
9	12	2	chodudikkula area
10	13	2	mangala vari street
11	14	1	jagapathi theater road
12	15	15	raolway station area and market area
13	18	16	indira colony
14	19	16	D.T.palem
15	20	12	ramalakshmi weavers colony
16	21	10	brahmapuram area
17	22	10	y.s.r.colony
18	23	9	rajakula colony

ANNEXURE-II (See Rule-4)			
List of Areas Prohibited for High Rise Buildings			
Sl. No	Ward No.	Block No.	Name of the Locality / Area
1	2	3	4
1	1	9	Rajakula Colony
2	3	07, 08	Putchuka Vari Street
3	4	6	Shadi Khana Back Side area, Patha Peta area
4	5	5	Mosque area, Urdu School area
5	6	4	Gunnala palli Harijanavada
6	7	6	Syamala Convent Road area, Basava Tarakarama Society area
7	8	17	Joganandararao Colony
8	9	17	Kanuri Nagar Weavers Colony , East Telugu Palem
9	10	17	N.T.R. Colony, Chenchula Colony
10	11	2, 3	Chodudukkulu, Mangalavari bazar
11	12	2	Matam Side road, Andhra Bank area
12	13	1	Post Office area, Gotulomill area
13	14	1	Jagapathi area
14	15	16	Railway Station area, Market Back side area
15	16	13, 14	Mosque back side area, Polavarapu peta area
16	17	14	K.D.C.C. Bank area, Old Vegetable Market Road
17	18	16	Indira Colony, Arava Gudem
18	19	16	D.T.Palem area, Ganesh Nagar area
19	20	12	R.N.W. Colony, High School back side area
20	21	11	Brahmapuram area, Except Guduru Road
21	22	11	Y.S.R. Colony

TIRUVURU MUNICIPALITY			
ANNEXURE-I (See Rule-4)			
List of Old/ Existing Built-Up Areas/ Congested Areas/ Settlement/ Gram Khantam/ Abadi			
Sl.No.	**Ward No.**	**Block No.**	**Name of the Lociality / Area**
1	**2**	**3**	**4**
1	---	---	Andhra Bank Road, Nadim Tiruvuru
2	---	---	Sangam Road , Nadim Tiruvuru
3	---	---	Kamsali Bazar, Ashok Nagar,Nadim Tiruvuru
4	---	---	Panchayat Market Road, Cheerala Centre
5	---	---	Kunda Satyam Mill Road, Ashok Nagar,Nadim Tiruvuru
6	---	---	Bommala Nageswara Road (Opp Bus Stand), Ashok Nagar,Nadim Tiruvuru
7	---	---	IDEAS Office Road, Ashok Nagar,Rajupeta
8	---	---	Dasara malapalli Road, Ashok Nagar, Rajpeta
9	---	---	Vuyyuru Handumantha rao Bazar, Rajupeta
10	---	---	Seethamaha laxmi colony Road, Rajupeta, Seethamaha laxmi Colony
11	---	---	Kanchi China Ragavaiah House Road, Ashok Nagar, Nadim Tiruvuru
12	---	---	Panchayat Office Park Road , Nadim Tiruvuru
13	---	---	M.R.O Office Road , Nadim Tiruvuru
14	---	---	Mill Chinna babu Road, Factory Centre
15	---	---	Polimera Road, Regula gadda , Factory Centre
16	---	---	Vadru Bazar, Pata Tiruvuru
17	---	---	Ramalayam Road & Degree College Road, Pata Tiruvuru
18	---	---	Janmabhumi Road, Nadim Tiruvuru
19	---	---	Vijayabakabujetab Road, Nadim Tiruvuru
20	---	---	Kummari Bazar Road, Nadim Tiruvuru
21	---	---	Puntapu vaari Street, Nadim Tiruvuru
22	---	---	Tangella beedu ColonyRoad, Nadim Tiruvuru
23	---	---	Gunda Vaari mill Road, Nadim Tiruvuru
24	---	---	Post office Road, Nadim Tiruvuru
25	---	---	Gajjala Pullaiah vaari Road, Cheerala Centre, Nadim Tiruvuru
26	---	---	S.B.I Road, Nadim Tiruvuru
27	---	---	S.B.H Road, Nadim Tiruvuru

ANNEXURE-II (See Rule-4)			
List of Areas Prohibited for High Rise Buildings			
Sl. No	**Ward No.**	**Block No.**	**Name of the Locality / Area**
1	**2**	**3**	**4**
1	---	---	---
2	---	---	---
3	---	---	---

VUYYURU MUNICIPALITY			
ANNEXURE-I (See Rule-4)			
List of Old/ Existing Built-Up Areas/ Congested Areas/ Settlement/ Gram Khantam/ Abadi			
Sl.No.	**Ward No.**	**Block No.**	**Name of the Lociality / Area**
1	**2**	**3**	**4**
1		8	Bhogendra Bazar, Kotha Machine Road
2		8&9	Gaffar Bazar
3		9	Old Water Tank Road, Yelavalli Sri Rama Murthi Road, Aziz Bazar
4		10	Old Telephone Exchange Bazar, Urdhu School Bazar, Bangala West Side Road, L P Vari Veedhi 1& 2
5		11	Viswa Nadh Bazar
6		12	Pucha Sivaiah Bazar, Patamata Sundar Rao Bazar
7		2	Sundaram Peta Area

ANNEXURE-II (See Rule-4)			
List of Areas Prohibited for High Rise Buildings			
Sl. No	**Ward No.**	**Block No.**	**Name of the Locality / Area**
1	**2**	**3**	**4**
1		8th	Katuru Road & Gandigunta Harijanavada Road, New Bye-Pass Road, Mini Bye-Pass Road.
2		7	Thotalavalluru Road
3		1 ,3,4,5, 6 & 8	Vijayawada to Machilipatnam Road
4		2	Yakamuru road , Sivalayam road
5		6 & 7	Harijanavada Road (R.T.C.Depo West), Flora School Road, Srinivasa College Road.
6		10, 11 & 12	Gurajada Zilla Parishad Road.

VIJAYAWADA MUNICIPAL CORPORATION			
ANNEXURE-I (See Rule-4)			
List of Old/ Existing Built-Up Areas/ Congested Areas/ Settlement/ Gram Khantam/ Abadi			
Sl.No.	**Ward No.**	**Block No.**	**Name of the Lociality / Area**
1	**2**	**3**	**4**
1	Bhavanipuram		Southern side of N.H.5, Bhavanipuram area excluding local commercial and industrial area shown in the Master plan.
2	1,13	2,4,7,9	Eastern side of N.H.5 road from Head Water Works via : Kotteti Kotiah street – Eastern side of Ambedkar Road upto Municipal Corporation limits.
3	13, 1	9, 10,13, 14, 15, 16, 17, 7,9.	Western side of K.T.Road – Syed Appalaswamy College upto Ganapathi Rao junction excluding 200' belt.
4	1	7, 10, 11, 12, 13, 14.	Western side of main bazaar at Thammina Potharaju Junction via Bhavannarayana St, upto B.R.P.Road and Canal Road junction excluding 200' belt abutting canal road.
5	13	17, 12, 11, 12, 13.	Chittinagar area ecluding 200' belt abutting Eastern side of K.T.Road upto Tunnel Road
6	4	1	Gollapalem Gattu Hill area.
7	8	1	Entire locality i.e., Kamsalipet, Subbarajunagar etc.
8	16, 17	24, 1	Machavaram Hill slope area. Mogalrajapuram Hill slope area.
9	10, Patamata	11, 10, 8	Brahmarambhapuram, Balajinagar, Nahrunagar, Gowthaminagar, Ranigarithota, excluding 22' belt abutting Highway.
10	Gundala		Gangireddula Dibba, Gunadala Hill slope
11	Patamata		Ramalingeswara Nagar area.
12	8	17	Northern side of C.K.Reddy Road from Eluru Locks to S.N.Puram old Rly.Track road upto Rly.site excluding 200' belt abutting C.K.Reddy Road.
	All notified slum areas including slums improved under ODA		

ANNEXURE-II (See Rule-4)			
List of Areas Prohibited for High Rise Buildings			
Sl. No	**Ward No.**	**Block No.**	**Name of the Locality / Area**
1	**2**	**3**	**4**
1	All Areas and Localities Mentioned In Annexure - I above, except For Plots Abutting 18 M and above Roads		
2	1 km from the boundary of existing and proposed Airports		

BHIMAVARAM MUNICIPALITY			
ANNEXURE-I (See Rule-4)			
List of Old/ Existing Built-Up Areas/ Congested Areas/ Settlement/ Gram Khantam/ Abadi			
Sl.No.	Ward No.	Block No.	Name of the Lociality / Area
1	2	3	4
1.	1st Ward		Indirapuram
2			Govindarao Nagar, 2nd and 3rd cross street
3			CPM Office back side road
4	2nd Ward		Mentrvarithota, Harijanawada
5			Koyauari Street
6			Rajula Street
7			Grandhi vari street
8			Vella vari street
9			Kadhar vari street
10	3rd Ward		Pinnesula vari street
11			Harijana Doctors street
12			Motupallivari street
13			Peer sahib street
14	4th Ward		Nagendra Swamy temple road
15			Rajakula peta
16	6th Ward		Kurmayya peta
17			Nakkalagunta area
18			Ramachandra puram
19			Bokkavari palem
20	7th Ward		Rajakula peta
21			Bandarupuntha road
22			Kamujuvaripalem road
23			Leprosy colony
24			Gandhi nagar area06742\
25			Malli thota
26			Sowbhagya nagar area
27	8th Ward		Chinarangani plaem
28			Kankaradoddi area
29	9th Ward		Bandaru puntha road
30			Muatharassndibba
31	10th Ward		Sweepers colony
32			Naivari street
33			Yadavula street
34			Challavari street
35			Chinaranganipalem puntha
36	11th Ward		Arundathi peta
37			Gunupudi harijanawada
38			Beedila vari Street
39			Gummalla vari Street
40			Badugu vari street
41			Pothula vari Street
42	12th Ward		Pothula vari peta Harijanawadda
43			Bridge peta
44			Ambedkar nagar
45	13th Ward		Rajakula peta
46			Bethanipeta
47			Kummarla street
48			Papoluvari street
49			Nallam vari street
50	14th Ward		Musthivari thota
51			Ramarajubhusana street
52			Kummarla street
53			Madduri vari street
54	15th Ward		Chigideela peta
55			Kummarla street
56			Kalivari thota street
57			Padmasaleela street
58			Ammairaju thota
59			Papoluvari street
60	16th Ward		Telegala street
61			Makireddivari street
62			Nallam vari street

63			Papoluvari street
64			Karanala gunta street
65	17th Ward		Bantrothula peta
66			Nanduri vari street
67			Yamijalavari street
68			Vasntalavari street
69	18th Ward		Ramabhadrabadava street
70			Scavengers colony
71			Rajakula cheruvu area
72			Pasupuleti vari street
73	19th Ward		Urdu school area
74			Mahammadeeyula street
75			Old yanamadurru drain bund road
76			Abdul rehaman street
77			Ameeruddin street
78			Bheemeswara swamy temple street
79			Moulana abdul kalamazed U.P. School area
80	20th Ward		Narivari street
81			Gannabattula vari street
82			Mentevari street
83	21st Ward		Pedapeta malapalli area
84			Gorrela vari street
85			Kurisetti vari street
86			Ranga bazar
87			Chinamaseedu area
88	22nd Ward		Pallivari street
89			Jalarlapeta
90			Patharlapallivari street
91			Chinthala doddi
92	23rd Ward		Vanapallivari street
93			Yarragopuvari street
94			Chundurivari street
95			Turakalatallavari street
96			Chinapeta area
97	24th Ward		Ramayanaamvari thota
98			Chinni apparao thota
99	25th Ward		Chinpeta
100			teachers street
101			S.P.Street slum area
102	26th Ward		S.P.Street slum area
103			Kathari nagar slum
104			S.V.S Colony
105	27th Ward		Fish marketarea
106			Jalarlapeta
107			pathivadavari street
108			Yadavula street
109	28th Ward		Christian burial ground area
110			Daniel street
111			Sudarshan street
112			Peddetivari street
113			Akkarabothula street
114	29th Ward		B.C.colony
115			Bheemeswara swamy colony
116	30th Ward		Sagarlapeta
117	31st Ward		balusumudi church street
118			S.T.colony
119	32nd Ward		Taimallavari street
120			Balusumudi puntha
121	33rd Ward		Penmetasvari street
122			Losari canal bund road
123			Irrigation canal road
124	34th Ward		Nehrupeta slum area
125			Nagendra nagar slum area
126	35th Ward		Kantrenugunta area
127	36th Ward		Mulugurthi naganna street
128			Krishan mandiram street
129			Rama raju thota
130	37th Ward		Chekkavari street
131			Yadavula vari street

132			Rajakula cheruvu vari street
133			Ayyagari street
134	38th Ward		Lankapeta area
135	39th Ward		Durgapuram area

ELURU MUNICIPALITY			
ANNEXURE-I (See Rule-4)			
List of Old/ Existing Built-Up Areas/ Congested Areas/ Settlement/ Gram Khantam/ Abadi			
Sl.No.	**Ward No.**	**Block No.**	**Name of the Lociality / Area**
1	**2**	**3**	**4**
1	1,2	13part, 14,16A,17,19,21	Yetigattu, D.S.P Bungalow, Aseal Metta, Lakshmivakrapu peta, Kabadigudem, Gun bazaar, Pandurangapuram
2	3,4,5	9,10 part,11,12	Bavisetti vari peta, Nalladibba, Satyanarayana peta, Vennavalli vari peta ,Lambadipeta
3	6,7,8	7A,7B,7C,8	Panduranga talkies area, Gajjalavari tank, Kandutsuryam park, Sivaiah temple, Vegetable market area, Fish market, Chataparru raod.
4	9,10,11,12	6C,6D,7C,7D,7E	Madepalli roadm Mekaraju street, Philospeta, Kathepu street area Markandeyaswamy temple area, Venkanna tank, Clock tower Sanagapappu bazaar, Jwalapahareswara swamy temple area ,Kothagudem.
5	13,14,15	3A part ,4,5,6A, part6B part	Y.M.H.A. Hall area, Cloth market, Main bazaar, Mahalakshmitemple area, Loyadibba, Vaddiguem.
6	16,17,18,19	3B,3C,3D6A,6B	Dongalamandapam area, Bommalagudi area, Venkateswaswamy temple area, Kobbarithota, Kamula Appanna Bungalow area, Vangayagudem
7	20,21	1 part,2	Gollayagudem, Subrahmanyam colony, Lakshmamma tank area.
8	22	22D part	Ramakrishna puram, Padamati lakulu
9	23,24	28 part	Tadava nagar, Phiranguladibba
10	25,27	25 part,26 part,27,24A part	Ameenapeta, Katta subbarao thota, NGOS Colony, T.D.P. Office area
11	29,38,39,40,50	16A,16B	Tapimestry colony, Titus nagar, Kummari revu, Sivagopalapuram, Pushpaleela nagar, Rani nagar, Yadava nagar, Tangellamudi, Pedamalapalli, Lankapeta, Isreal peta
12	34,35,36	24C	Pamuladibba, Yetiguttu, Chinthachettu area
13	37,41,42,44, 45,46,47, 48,49	15,17,18,20A part,20B,20C, 20D,20E,20F part	Kothapeta, Gandhi nagar, Venkatarao peta, Gangamma temple area, Gilakala gate, Chodidibba, Kabadigudem ,Adivarapu peta
14	33,43	22A,22B,22C,22D	Chittivalasapakalu, Power peta, Vasudevalayam temple area

ANNEXURE-II (See Rule-4)			
List of Areas Prohibited for High Rise Buildings			
Sl. No	**Ward No.**	**Block No.**	**Name of the Locality / Area**
1	**2**	**3**	**4**

ANEXURE-II (See Rule-4)			
List of Areas Prohibited for High Rise Buildings			
Sl. No	**Ward No.**	**Block No.**	**Name of the Locality / Area**
1	**2**	**3**	**4**
1.	1,2	13part,	SMR nagar, Both sides of Stadium road, Jangareddy gudem road Mini bye pass road,
2	5	10 part	Teachers colony lay-out
3	14,13,15, 16,17,19	3A part , 3B,3C, 3D,4,5,6A part, 6B part	Agraharam , Ambica Theatre road, both sides of paerrayyakoneru road, Perugu chettu, Ponangi road, Kalkaluru bye pass coaxilroad, Main bazaar , K.E.Canal road, Pedapadu road
4	21	1 part	Gulabithota lay-out
5	22	22D part	Vijayaguarden, Postal colony, 4rh class employees lay-out
6	23,24	28 part,27	Santhi nagar,
7	26	25 part	Both sides of N.R. Petra, GNT Road
8	27,28,	24A part,25 part, 26 part	Pathebada main road, Ashok nagar
9	30,31	24A part,24B,24C	Mothey vari thota, Sanjay Gandhi colony, Brundavan park
10	32,34,35,36	23A,23B,23C,24B,24C	R.R.Peta, RMS colony, Chanikyapuri colony
11	46,50	15,16A,20A part 20F part	Nookelamma temple road both sides of Chinthalapudi road, jangareddy gudem road Adivarpu peta main road.

JANGGAREDDY GUDEM MUNICIPALITY

ANNEXURE-I (See Rule-4)			
List of Old/ Existing Built-Up Areas/ Congested Areas/ Settlement/ Gram Khantam/ Abadi			
Sl.No.	**Ward No.**	**Block No.**	**Name of the Lociality / Area**
1	**2**	**3**	**4**
1	---	---	NIL

ANNEXURE-II (See Rule-4)			
List of Areas Prohibited for High Rise Buildings			
Sl. No	**Ward No.**	**Block No.**	**Name of the Locality / Area**
1	**2**	**3**	**4**
1	---	---	NIL

KOVVUR MUNICIPALITY			
ANNEXURE-I (See Rule-4)			
List of Old/ Existing Built-Up Areas/ Congested Areas/ Settlement/ Gram Khantam/ Abadi			
Sl.No.	**Ward No.**	**Block No.**	**Name of the Lociality / Area**
1	**2**	**3**	**4**
1.	1.	14	Rajeev colony Slum EWS, Sri Rama colony Slum EWS,
2	2	1	Raju Master Street, Sirivella vari veedhi, Gadamsetty vari veedhi part, Sri Rama colony part, other than Sri Rama colony area slum, 1st Ward Slum, Maddipatti vari veedhi, Varre vari veedhi, Varddeneedi vari veedhi part.
3	3	1p, 2p	Seeli vari street part, Yalla vari street part, Jonnakuti vari street, Dagolu vari street part, Nandina vari street part, Kudulla vari street part, Two well road part, Mission school road part, Nettula vari street, Kumarapu vari street, Bontha vari street, Christian pet, Harijanawada part,Gadamsetti vari veedhi part, Pulaparthi vari veedhi, Ramalayam street.
4	4	2 P	Seeli vari street part, Yalla vari street part, Jonnakuti vari street, Dagolu vari street part, Nandina vari street part, Kudulla vari street part, Two well road part, Mission school road part, Nettula vari street, Kumarapu vari street, Bontha vari street, Christian pet, Harijanawada part,Gadamsetti vari veedhi part, Pulaparthi vari veedhi, Ramalayam street. Christian pet, Harijanawada part,Gadamsetti vari veedhi part, Pulaparthi vari veedhi, Ramalayam street.
5	5	5 p	Nalla vari street, Maddipatla vari street, Madukuri vari street, Nalla vari street, Rajaka vari street, 3rd and 4th ward slums, Meraka veedhi, Subrahmanya Swamy temple street part, Sankara Matam part, Sivalayam street. 4th ward slum part
6	6	5P, 6P	Velamakanni vari street, Kovvuramma temple street part, Koduri vari street part, Vegi vari street part, Duddupudi vari street part, Parimi vari Veedhi part, 4th ward Slum part, Subrahmanya Swamy temple street part, Sivalayam street part, Racharla vari veedhi part.
7	7	6P, 7P	Bhogavalli vari veedhi, Nalam vari veedhi, Koduri vari veedhi part, Panchayat road part, Kovvuramma temple street part, Duddupudi vari street part, Parimi vari street part, Gudapati vari street, Nunna vari street, Madhukuri vari veedhi, Kalagara vari street, Karuturi vari veedhi.
8	8	7P, 8P	Choudisetti vari street, Sanivarapu vari street, Seelamsetti vari street, Baladari vari street, Koduri vari street part, Mosque street, Koduri Papa Rao street, Kothapally vari street, Gelam vari street part.
9	9	8P, 9P	Utalanka area, Mamidanna vari Veedhi, Grandhi vari Veedhi part, Samanchi vari veedhi part, Old Government hospital road, Tallapragada vari street part, Nadella Damam veedhi, Post office road, Immani vari street,
10	10	10	Electrical Sub Station road part, Guest house Western side road, Gowthami Nagar area, Veera Mandhirama road, Thellapragada vari street part, Nadella Raman veedhi, Post office road.
11	11	10, 9	Nadella vari Veedhi, Bodapati Mutyala rao veedhi, Ele. Quarters road, Relli peta Veedhi, Grandhalayam back side street, Thallapragada vari veedhi part.
12	12	9	Gowdiya Matam street part, Mamidanna vari street part, Grandhi vari street part, Bandreddi vari veedhi, Thallapragada vari veedhi, Somanchi vari veedhi, Old Govt. Hospital road, Vijaya Vihar back side road, Gonimadathala vari street, Sankabathula vari veedhi part, Vuppala vari veedhi.
13	13	12	Palakodeti vari veedhi, Madhi raju vari veedhi, Rachuri vari veedhi, Chitikina vari Veedhi, Kilani vari Veedhi, Kakkirala vari veedhi, Kotla vari veedhi, Islamiya vari veedhi, Kikkara vari Veedhi, Devara vari Veedhi, Gandikota vari veedhi.
14	14	12	Gandikota vari street, Travelers Bunglow road, Palakodeti vari street, Madi raju vari street, Kilani vari street, L.I.C. back road.
15	15	11	Bridge peta new layout (EWS) old Bridge peta EWS, Vambay colony area.
16	16	16	Total Aurangabad area, Gowdi peta area.
17	17	15, 11	Nil, Opp: Avanthi road
18	18	13	Islam vari street part, Budigina vari street part, Chakalimanyam area Karnala choultry part, manepalli vari street.

19	19	13	Sagiraju vari veedhi, Dayani vari street, Vallepalli vari street, L-bend street, Islamiya vari street part, Budigina vari Veedhi, Karnala Sathram street, Manepalli vari street.
20	20	15, 4	Achayamma colony area, Yanadi colony, Indiramma housing colony.
21	21	4	Vegi Surya Rao Chavidi area, Kantamani Appa Rao area, Parimi Arjunudu agricultural land area.
22	22	4,3	Ubba vari street, Palempati vari street, Vallipalli vari street, Yaganti vari street.
23	23	3	Palempati vari street, Davala vari street, Achanta vari street, Bandaru vari street, Sirikonda vari street, Chitturi vari street, Vungarala vari street.

ANNEXURE-II
(See Rule-4)

List of Areas Prohibited for High Rise Buildings

Sl. No	Ward No.	Block No.	Name of the Locality / Area
1	**2**	**3**	**4**
1.	1	14p	G.N.T. road, Rajeev colony, Main Road, R.T.C. colony.
2	2	14,1	G.N.T. road
3	3	1 p	G.N.T. road from 2nd ward school
4	4	2p	G.N.T. road
5	5	5p	A.K.P road Venugopala Swamy street, G.N.T. road.
6	6	5p,6p	A.K.P. road, saw mill road part.
7	7	6p, 7p	Vegi vari veedhi part, Yuvaraj cable road part, Rayapati vari veedhi, A.K.P. road part.
8	8	7p, 8p	A.K.P. road part, Saw Mill road part
9	9	8p, 9p	Ferry road (Lancheela Revu) Gelam vari road part, Ferry road, A.K.P. road part.
10	10	10	Electrical substation road part (Adding to factory road) Andhra sugars Western side road part, Pushkaram road part.
11	11	10, 9	Thurla company road, Factory Quarters road, Mammidanna vari street, Sankabathula vari veedhi part, Pushkaram road part, Factory Quarters road.
12	12	9	Thayaramma School road, Sankabathula vari veedhi part, Factory quarters road, Surveyor pullaiah veedhi, LIC road, Pushkaram road.
13	13	12	A.K.P. road, Municipal shopping complex road, Railway station road (opp: Government Junior College)
14	14	12	Municipal Shopping complex road, Railway Station road (S.B.I. road) Kantamani Venkata Narasimha Rao street, Old post office road, chamarthi vari street, Park road, Arikila vari street, R.D.O. Office road, Alluri vari street, Noushad Ali vari road.
15	15	11	Dayani vari puntha road, Godavari Bund, Srinivasapuram layout, Total roads, Srinivasapuram new layout, Srinivasapuram 40'-0' towards EWS layout
16	16	16	Vemulurupuntha road, Godavari bund road
17	17	15, 11	Vemulurupuntha road, Dayani vari puntha, Railway Station road, Dunnaputhula Raju street, Kalavacharla vari street, Park road, Karri Syama Sundara Rao road, Pothula Surya Rao road, Bommireddy Quarter's road, Alluri vari street, Vemuluripuntha road, Telephone excise road, Dodda vari street, Darai Cheruvu part.
18	13 15		Vemuluripuntha road, Central excise office road, Lakshmi talkies road, Gopi talkies road, Rama society road, S.B.I. road, Lakshmi Venkata Narasamma road, N.G.O's home road. Vemuluripuntha road, N.G.O's home road, Matte vari veedhi, Karri Syama Sundara Rao road, Park road, Bommireddi Quarters.
19	19	13	A.K.P. road, Vemulurupuntha road, Railway Station road.
20	20	15, 4, 13	Satyavathi Nagar, Housing Society layout area, Kantamani Madhava Rao layout, Lawyers colony, Kantamani Rama Krishna layout, Achayamma colony main road, R. Srinivasa rao road.
21	21	4	Vemulurupuntha road, Nandamurupuntha road, R.T.C. Depot area.
22	22	4,3	Anangapal Street, A.K.P. road, Mini Bay Pass road.
23	23	3	A.K.P. road, G.N.T. road, Mini By pass road, Mypala vari street.

NARSAPUR MUNICIPALITY			
ANNEXURE-I (See Rule-4)			
List of Old/ Existing Built-Up Areas/ Congested Areas/ Settlement/ Gram Khantam/ Abadi			
Sl.No.	Ward No.	Block No.	Name of the Lociality / Area
1	2	3	4
1.	1.	5	Sriharipeta, Lockpeta
2	2	2P 5P	Chalavapeta, Dondapativari Street area, Ponnapalli, Madhavaipalem, A.P.S.R.T.C. sourrounding areas, Godavari Street, Baswani Kondayya Street, Barri Lakshmana Swamy Street, Brahmili Compound Street
3	3	1, 2P	Madhavaipalem School area, Amareswara Swamy Temple area, Borra Subbayamma street area, Sanka Venkata Ratnam Street, Tirumani Veera Thatha Street, Godavari Street.
4	4	1, 2P, 3P	Borravari Street area, Gantlamma Temple area, Cherukuri Peddaiah street area, Kalipatnamvari street area, Sankavari Street, Gudavari Street, Barrivari Street
5	5	1, 2P	Chakali Chervu area, Munusubugari street area, Chunduru vari street.
6	6	3P, 4	Rayasamvari street area, Sundhavari street area, Jampavari street, Yarramillivari street area, Kunapareddy vari street, Juttavari Street, Siddanivari Street
7	7		Y.N.K. Hall street area, Gandhi Bazar area, Jattivari street area, Sripadavari street, Ravivari street area, Paruvari street area, Ganta Subbayamma vari street area, Achantavari street, Palanki Manikyam Street, Kunchena Satyamgari Street, Government Girls High School Street, Kavali Adinarayanavari Street, Ambativari Street
8	8	3P, 4	Chigatapuvari street area, Kotavaddapalem area, Siddanivari Street
9	9	7P	Vellalavari street area, Ballavari street area, Akellavari street area, Nandamuri colony area, Bonamvari street, Ballavari Street, Valavalavari Street, Akellavari Street, Indira Colony
10	10	7P	Vellalavari street area, Ballavari street area, Akellavari street area, Nandamuri colony area, Tailorpeta, Maseedh Street, Yathamvari Street, Adhikarivari Street, Josyulavari Street, Vattikutivari Street, Rayaji Street, Saripallivari Street
11	11	5, 6P, 8P	Vankavari street area, Jagilankivari street area, Velampeta, Kummaripeta, Dwaravari street area, Ambati Appla Swamy street area, Vanka Streeta, Akula Narasimha Murthy Street, Roop Ram Street
12	12	8P, 9P	Gubbalavari street area, Pusala Surya Rao street area, Churchpeta area.
13	13	7P, 8P,9P, 11P, 12P	Akivari street area, Maddipatlavari street, Mastan Saheb road, Addagallavari street.
14	14	7, 12	Rnga swamy Ayyamgari street area, Mokavaripalem, Tirumalavari street area, Raja Rajeswari street area, Bonamvari street area, Burrial ground street area.
15	15	11, 12	Ankanivaripalem Road, Raja Rajeswari Street, Burial Ground Street, Borra Saheb Street
16	16	9, 11	Malem street area, Pillipeta (Old Training School street) Gandhinagar-I, Hussan Saheb Street.
17	17	9, 10	Pichika Bangarayya gari street area, Avvari Kammayya street area, Jogivari street, Akivari street, Balachandramouleswara swamy Temple street, Mulakala Bhadrayya street area.
18	18	9, 10	Vasa Samuel Street area, Kondeti Chakrapani street, area, Vanuvulamma Temple area, Balachandra Mouleswara Swamy street area, Akasapu Ramalingayya street area, Mulakala Bhadrayya street area, Buddiga Venkanna street area, Mulakala Jogaiah Street
19	19	14	Mrutyunjaya Nagar .
20	20	9, 11, 15	Pillipeta, Gandhinagar-II, Lankapeta
21	21	11, 15	Singodianpeta area
22	22	15	Sirigineedivari street area, Kotha Colony, (N.T.R.), Palaparthivari street area, Kotha Peta.
23	23	15	Palaparthivari street (Old N.T.R. Colony), Muddalavari Street
24	24	14, 17	Kappalapeta, Ledia Home Street
25	25	16	Kollabathuvari Meraka, Weavers colony, Paruvuvari Street.
26	26	16, 17	Manginavari Nagar, Y.S.R. Nagar, Kollabathula Meraka, Meraka

			Gudem.
27	27	17	Katikalavari street area, Sivalayama street area, Kotha Colony Roads, Kothapallivari Street
28	28	13, 17	Kondeti Ramayya street area, Christianpeta area, Kommanapalli vari street area, mandavari Garuvu, Elurivari Street, Moturivari Street.
29	29	13, 18	Arudhathipeta, Samatham Veera Nagaiah Street, Harijanawada, Scavengers Colony, Jangamvari Peta.
30	30	18, 19	Ballavari street,, Javadhalavaripeta, Nagulamma Temple area, Grace Nagar.
31	31	19	Ballavari Street.

ANNEXURE-II (See Rule-4)			
List of Areas Prohibited for High Rise Buildings			
Sl. No	**Ward No.**	**Block No.**	**Name of the Locality / Area**
1	**2**	**3**	**4**
			All the congested areas and localities mentioned in the item (1) & (2) except plots abutting the roads having width of 12 Mts and above.

NIDADAVOLE MUNICIPALITY			
ANNEXURE-I (See Rule-4)			
List of Old/ Existing Built-Up Areas/ Congested Areas/ Settlement/ Gram Khantam/ Abadi			
Sl.No.	**Ward No.**	**Block No.**	**Name of the Lociality / Area**
1	**2**	**3**	**4**
1.	19&20	15	Basiviredy peta
2	20	14	Battila peta
3	22	13	Malakodu
4	21	13	Raipeta (Extn. Area)
5	24	13	Subbaraju peta
6	25	13	Teerugudem
7	1	1	Lingam palli
8	28	9	Nehrunagar
9	14&15	9	Harijanapeta
10	7	3	Jangala Dibba (Annapuran Nagar)
11	2	2	S.T.Colony
12	28	9	Leprosy Colony
13	4&5	2	Bukkapeta (H.W)
14	5	2	Takkari Baba peta
15	26	13	N.T.R.Colony
16	27	9	M.V.nagar
17	9	4	Old Treasury office, Kandukuri vari veedhi
18	9	5	Deenabandu road,(Ram Nagar Part)
19	11	6	Ganta vari street (area) kapula veedhi , Ramalavam Area
20	10	7	Pedda masidu road,
21	13	8	Vaddila veedi
22	19	15	Ramalaym area, Raipeta
23	14	10	Church peta Area(p)
24	11	11	Sri Sailam Veedi, kaki vari veedi,
25	18	1	Suleman Veedi
26	8	4	Old post office road (Kandukuri vari veedi)
27	16	10	Rajaka Veedi
28	17	11	Ujjina vari veedi

ANNEXURE-II (See Rule-4)			
List of Areas Prohibited for High Rise Buildings			
Sl. No	**Ward No.**	**Block No.**	**Name of the Locality / Area**
1	**2**	**3**	**4**
1.	19&20	15	Basiviredy peta
2	20	14	Battila peta
3	22	13	Malakodu
4	21	13	Raipeta (Extn. Area)
5	24	13	Subbaraju peta
6	25	13	Teerugudem
7	1	1	Lingam palli
8	28	9	Nehrunagar
9	14&15	9	Harijanapeta
10	7	3	Jangala Dibba (Annapuran Nagar)
11	2	2	S.T.Colony
12	28	9	Leprosy Colony
13	4&5	2	Bukkapeta (H.W)
14	5	2	Takkari Baba peta
15	26	13	N.T.R.Colony
16	27	9	M.V.nagar
17	9	4	Old Treasury office, Kandukuri vari veedhi
18	9	5	Deenabandu road,(Ram Nagar Part)
19	11	6	Ganta vari street (area) kapula veedhi , Ramalavam Area
20	10	7	Pedda masidu road,
21	13	8	Vaddila veedi
22	19	15	Ramalaym area, Raipeta
23	14	10	Church peta Area(p)
24	11	11	Sri Sailam Veedi, kaki vari veedi,
25	18	1	Suleman Veedi
26	8	4	Old post office road (Kandukuri vari veedi)
27	16	10	Rajaka Veedi
28	17	11	Ujjina vari veedi

PALACOLE MUNICIPALITY			
ANNEXURE-I (See Rule-4)			
List of Old/ Existing Built-Up Areas/ Congested Areas/ Settlement/ Gram Khantam/ Abadi			
Sl.No.	**Ward No.**	**Block No.**	**Name of the Lociality / Area**
1	**2**	**3**	**4**
1.	1.	8	-Nil-
2	2	9	-Nil-
3	3	12	Srirampeta E.I. Scheme area.
4	4	10,11	Sreerampeta Extension E.I., Scheme area, Matham Street, RMC school road, T.S.No.561 Part (Kodigattu Area) Except Jetty Tank Road and Kodugattu Road.
5	5	13,14,15	Rangamannarpeta, Shavkarpeta, Bank Street Except M.G. Road and canal road, Jetty tank road.
6	6	16,18,19	Bondadavari Veedhi, Rajakapeta, Saladi Jamindari Street, Chinagopuram Street, Mattam street, Annamvari street Except M.G. Road
7	7	17,17A	Pallapu Street, Katikaredi Street, Bollavari Street, Jandyla Suryanarayana Hospital road Except approved layout areas
8	8	21	Bangaruvari Tank E.I.Scheme area and Ganji Kendram E.I. Scheme area.
9	9	20,22,23A	Bollavari Street, D.N.R. Womens College road, Gorrelavari Street, Bangaruvari Tank Street Except approved layout areas
10	10	23,24	Siddulagudem, Markpet, Lakshmi Nagar E.I. Scheme area, Part of Sambhunipeta E.I. Scheme area. Except approved layout areas.
11	11	25,24A	Sambhunipeta E.I. Scheme area, Ramayya Hall. Except Doddipoatla Road and approved layouts
12	12	26,27A	Eastern side of Kancheralavari Thota, Kalpanavari Street
13	13	30,36	Mucherlavari Street, Bangaruvari Thota, Gavara vari street Except M.G. Road
14	14	35,29	Kancherla vari street, Veeravari Street, Pittavari Street, Katikala Street, Addalavari Street, Janguvari Street and Polisettivari Street Except subbarayudu temple street
15	15	32,34	Pulaparthyvari street, Polisettivari street, Gunnamvari Street,Ashta Bhujalakshmi Narayanaswami temple street, Mandelavari Street, Tsavatapallivari Street, Rajulapudivari Street,KarravariStreet,Maruthi Talkies Northern road, Dr.Gopalam Street, Devuni Thota.
16	16	27,28	Pedapeta E.I. Scheme area, Inukondavari thota Paragada tank, Muthireddi vari street, Bejawadavari Street Except layout area.
17	17	33	Achugatlapalem E.I. Scheme, Mekavari Street Except approved layouts
18	18	41,47,46	Bethlahampeta E.I. Scheme area, Nagendrapuram, L.P.No.30/78 EWS S.T. Colony, Saladivari Thota Part.
19	19	38,39,40	Mamidi vari Street, Bonagiri vari Street, Ramagundam Street, Sangineedi vari Street, Pinni vari Street, Pedagopuram Street, Karumuri vari Street Except Bonagiri vari Street Junction to Girls High School Road junction, Girls High School Road Except Karumuri vari Street junction to Polisettivari street junction.
20	20	42,43,44	Jaldivari Street, Majetivari Street, Annadana Samajam Road, New Cloth Market road, Velamagudem, Saladivari Thota except Lions Eye Hospital road.
21	21	45,48	Rajakapeta, Lockpeta, Nagendrapuram, Fishermen Colony, Except Weekly market road.
22	22	49,50	Kothapeta, Weaker Section layout behind Sai Baba temple except Bhimavaram Road and approved layouts.
23	23	51,3	Ramaraopeta, Weaker Section colony behind Annapurna Theatre except Bhimavaram Road and approved layouts.
24	24	52,2A	Maddalavari Garuvu, Katikireddi vari Street part except Bhimavaram road, FCI Road approved layout areas.
25	25	55	A.V.S. colony, Someswara Agraharam except approved layout areas.
26	26	53,54,56	Sambanna Agraharam part except Bhimavaram Road.
27	27	1,2	Baddavanipeta E.I. Scheme, Baddavanipeta Extension E.I. Scheme area and Lajapathiroypeta 1st Street.
28	28	3,3A,4	Guthulavaripeta, Weavers Colony, Srikrishna Nagar except Bhimavaram road, Goods shed road, approved layouts.
29	29	6,6A	Chintala Thota, Weavers Colony part except Bhimavaram road.
30	30	7	Mavullammapeta, Sub-Registrar Office road.

31	31	5,5A	Vadalavanipeta, Christianpeta, Brahmananda Reddy colony

ANNEXURE-II (See Rule-4)			
List of Areas Prohibited for High Rise Buildings			
Sl. No	**Ward No.**	**Block No.**	**Name of the Locality / Area**
1	**2**	**3**	**4**
			All the congested areas and localities mentioned in the item (1) & except plots abutting the roads having width of 12 mts and above

TADEPALLEGUDEM MUNICIPALITY			
ANNEXURE-I (See Rule-4)			
List of Old/ Existing Built-Up Areas/ Congested Areas/ Settlement/ Gram Khantam/ Abadi			
Sl.No.	Ward No.	Block No.	Name of the Lociality / Area
1	2	3	4
1.	1.		The part of approved weakers section colony layout in L.P.No. 224/80. Towards north of Gayathri temple 40' feet Main roa, all internal roads in this part with a width of below 30' feet wide existing roads. Having 30'-0" feet and above roads are exempted.
2	2		1. The part of approved weakers section colony layout in L.P.No. 224/80. Towards soth side of Gayathri Temple 40' feet by Main road, all internal roads in this part with a width of below 30' feet wide existing roads. 2. All internal roads with a width of below 30' feet wide existing roads.
3	3		1. The part of approved weakers section colony layout in L.P.No. 224/80. All roads in the weakers section colony with a width of below 30'-0" feet wide existing roads an other roads in vanapalligudem area and pasupathi nagar area.
4	4		1. All internal roads in vanapalligudem Area and Indira nagar area with width of below 30'-0" feet wide existing road,
5	5		All internal roads in ward No.5 Subbarao peta area with a width of below 30'-0" feet wide existing roads.
6	6		All internal roads in Indira nagar with width of below 30' feet wide existing road.
8	8		All internal roads with a width of below 30' feet wide existing roads except seshamahal theater road.(Subbarao peta area, K.N. road, Salipeta area, Police quarters and Z.P.High School area)
9	9		All internal roads with a width of below 30' feet wide existing roads except Masque road, (salipeta area)
10	10		All internal roads with a width of below 30' feet wide existing roads. except Masque road and K.N. road, (Salipeta area, Pathooru and Rajikapeta area)
12	12		All internal roads with a width of below 30' feet wide existing roads.(Pathuru area back side of veterinary hospital and sanjeev nagar area)
14	14		All internal roads with a width of below 30' feet wide existing roads except K.N. road,Tanuku roa and Bhimavaram Bye pass road, Bramananda Reddy market area.
15	15		All internal roads with a width of below 30' feet wide existing roads in Savithrupeta, (except Bhimavaram bye pass & N.H.5 Darsiparru Puntha and also Rickshaw Puntha)
16	16		All internal roads with a width of below 30' feet wide existing roads (Juvvalapalem area)
17	17		All internal roads with a width of below 30' feet wide existing roads (Velampeta).
18	18		All internal roads with a width of below 30' feet wide existing roads (Tallamudunurupadu area)
19	19		All internal roads with a width of below 30' feet wide existing roads (Tallamudunurupadu area)
20	20		All internal roads with a width of below 30' feet wide existing roads (seetharampeta area, Kobbarithota area)
21	21		All internal roads with a width of below 30' feet wide existing roads (seetharampeta area, Kobbarithota area)
22	22		All internal roads with a width of below 30' feet wide existing roads (seetharampeta area, Kobbarithota area)
23	23		All internal roads with a width of below 30' feet wide existing roads (seetharampeta area, Kobbarithota area)
24	24		All internal roads with a width of below 30' feet wide existing roads (Yagarlapalli area)
25	25		All internal roads with a width of below 30' feet wide existing roads (Yagarlapalli area)
26	26		All internal roads with a width of below 30' feet wide existing roads (Railway station area & Railway Quarters, Jubilee road area)
27	27		All internal roads with a width of below 30' feet wide existing roads (Ramarao peta)
28	28		All internal roads with a width of below 30' feet wide existing roads

			(Dommarla colony & Teachers colony area)
29	29		All internal roads with a width of below 30' feet wide existing roads (Ramarao peta)
30	30		All internal roads with a width of below 30' feet wide existing roads (Kondayya cheruvu area, Param jyothi school area)
31	31		All internal roads with a width of below 30' feet wide existing roads (Kadakatla area, Harijanawada Gollagudem, Santhi nagar, Paramjyothi School area)
32	32		All internal roads with a width of below 30' feet wide existing roads (Kadakatla area
33	33		All internal roads with a width of below 30' feet wide existing roads (Ganesh Nagar area, F.C.I. Colony area, R.T.C. Complex area)
34	34		All internal roads with a width of below 30' feet wide existing roads (Housing Board area & Mother vaninni Hospital area)
35	35		All internal roads with a width of below 30' feet wide existing roads (Housing Board area, Rupa Nagar area.)

LIST OF NOTIFIED-NON NOTIFIED SLUMS			
Notified			
1.	Kaadakatla Harijanawada	32	East: Kaadakatla SC Colony Part and Malakuntha Tank, North: Gollagudem Main Road Leading to Kaadakatla West: Loddhana Vari Veedhi in Kaadakatla South: Badeti Vari Veedhi in Kaadakatla
2	TM Padu Harijanawada	18	East: Fields North: Irrigation Tank West: Irrigation Tank South: Fields
3	Dommarla Colony	28	East:Teeachers Colony North:Private Vacant Site West:ROB Under Construction South: Madras Howrah Railway Line
4	Kaadakatla SC colony	31	East: Private Open Site North: Rellys Colony part, Gunje Varistreet & Yarrabogula Vari Street West: Kaadakatla Harijanawada Slum South: Vacant Lands Kondayya Tank Raod.
5	Indhira Nagar	6	East: Residential Houses North: Vacant Lands ? Mamidala Tank Area West: Appa Raopeta Road Wouth : Dhanamma Temple Road.
6	Vanapalligudem	4	East: Good Sheppar School North : Vanapalligudem Tank West: Weakers Colony Slum South : Weakers Colony slum.
7	Juvvalapalem Phase-1	16	East: Alla Ratthayya Street North :NH ? 5 West: Fields South: Fields
8	Juvvalapalem Harijanawada	13	East: kunchenapalli Road North: Madras Howrah Railway Line West: Private House South : Eluru Canal
9	Yagarlapalli Harijanawada	24	East: Old rama Krishna rice mill site North: NH?5 West: Yagarlapalli rajakapeta slum South: Yagarlapalli mutyalamma puntha road
10	Kaadakatla SC,BC Colony	28	East: Ambethkar Colony Road North: Kondayya Tank Road West:kadakatla Railway Gate Road South: Kadakatla New Harijanawada Slum
11	Vimala nagar	5	East : DS Tank Road North: Weakers Section Colony West: Kothi Bomma Area South: Vani Convent Road
12	Gollagudem	33	East :FCI Colony North : Roopa Nagar Residential Colony West:KN Eoad South: Sipalpeta Slum & RTC Depo Compound Wall
13	Sipaipeta	33	East: Ganesh Nagar Main Road North: FCI Colony West: Gollagudem Slum South: RTC Depo Compound Wall.
14	Ell anjaneyulul Weakers Section Colony	3	East: Vanapalli gudem Main road & Mamidi Thota Slum North: Bapujipuntha Road West: Gayathri Temple Road South: Kotibon Road
15	Yagarlapalli Rajakapeta	25	East: Yagarlapalli Harijanawada Slum : North : NH?5 West: Munic Boundary South : Yagarlapalli Muthalamma Puntha road.
16	Kaadakatla New Harijanawada	32	East: Indian Gas Company Road & Kondayya Tank Road North :Private Open Sites West: Eluru Canal South: Private Open Sites
17	Mutyalamma Temple Area TM Padu	18	East: KN road North: Mutyalamm tank & Barrel Ground West: Fields South : Bala Nagar
18	Navvarupeta	14	East: Bhimavaram bye pass Road North: Br Market West: KN Road South: Satyanarayana Peta Slum.
19	Bhagya Lakshmi Peta	19	East: KN Road North : Sitha Ram Peta West: Maruthi Swamy Temple Area South: Relangi of Commerce Building Road

20	Sitha Ram Peta Harijanawada	20	East: KN road North:EVM High School Road West: Sitha Ram Peta Slum South: Chamber Of Commerce Building Road
21	13th ward Harijanawada	12	East: Agricultural Fields North : Tadepalli Tank West: Old Town Hirijanwada Slum South: Agricultural Fields
22	Old Town Harijanawada	12	East: Tadepalli Tank North: Pillalakarri Vari Street West: Masee Road South : Pathuru Residential Area.
23	Satyanarayana Peta	14	East: Bye Pass road North :Navvarupeta Slum West : KN road South: Private Vacant Site
24	Narsimha Rao Peta	17	East: Agricultural Fields North :Private Godowns West: Bhimavaram by pass Road Soth Agricultural Fields
25	Bala Venkateswara Swamy Temple Area TM Padu	18	East: Agricultural Fields North: Agricultural FIelds West: KN road South T.M.Padu Harijanawada Slum
26	Sitha Ram Peta	20	East: Sitharamapeta Harijanawada Slum North: EVM High School Road West: Annapurnamma Street South Sorojini Road
27	Murali Nagar	9	East: Salipeta Main Road North : Sesha Mahal Road West: K.N.Road South: Municipal Office Compound
28	Sall Peta & Golla Peta	9	East:Ravulavari Punta North :Town Hall Road West: Municipal Office Compound South Maseed Road
29	Maruthi Nagar	33	East:Kothibomma Road North: Aerodrome site West: Residential Houses South: Amutha Hospital Road.
30	Savithru peta	15	East Fiel Bohi North NH-5 West Bhimavaram Bye Pass Road South: Darisaparrupuntha Road
31	Rikshaw Puntha by the Side of Lorry Stand	15	East: Lorry Stand North : NH-5 West: Fields South : Fields
32	Military Colony & Ralla Sahib Colony	1	East: Air field land North : Air Fields Land West: Private Fields South: Private Fields
33	Near Gold Spot Company Kadakatla	31	East: Agritural Fields North : Kadakatla Tank West: Kaadakatla Main Road South: Agricultural Fields.
34	Near Urban Health Centre Yagarlapalli	24	East: urban Health centre main road Norh : Yagarlapalli Harijanawada Slum West:Agricultural Fields South: Agricultural Fields .
35	Vanapalligudem Harijanawada	4	East: Private Vacant Site North : Weakers Colony Slum West: Mamidithota Slum South :Apparao Peta Road
36	Rikshaw Puntha Nagar Kothi Bomma	3	Est: Weakers Colony Slum North: Pasarla Tank West: Kothibomma Road South:Weakers Colony Slum
37	Mamidi Thota	4	East: Vanapalligudem Harijanawada Slum North: Thota Pullayya Street West: Gandhi Statue Road South: Appa Rao Peta Road.
38	Relli Colony	31	East: Gunje Vari Street North: Kadakatla Main Road West: Kadakatla Harijanawada Slum South : Kadakatla SC Colony Slum
39	Eli Venkata Satyanarayana Nagar	23	East: Garazada Convent Road North: Urban Health Centre Yegariapall Opp Road Extension West: Field Channel South: Maruthi Swamy Temple Area
	Non-Notified		
40	Mutyala Vari Puntha	7	East: Husseen Junction School Raod North: Rocket Park Road West: Salipeta, Gollapeta Slum South:Musleem Burrel Ground
41	Rajeev Gruhakalpha Housing Colony –Out side Municipal Limits	26	East: Agricultural Fields North: Agricultural Fields West: Appa Rao peta Road South: Agricultural Fields
42	Rahabilitation Colony Kondruprolu-Out Side Municipal Limits	26	East: Agricultural Fields & Appa Rao Peta Road North: Agricultural Fields West: Kondruprolu Road South: Bye Pass Road NH-5

ANNEXURE-II (See Rule-4)			
List of Areas Prohibited for High Rise Buildings			
Sl. No	**Ward No.**	**Block No.**	**Name of the Locality / Area**
1	**2**	**3**	**4**
1.			Bhimavarm roa from the junction of old N.H.5 up to Municipal limits

2			Eluru road and Tanuku road (old G.N.T. road) from east side municipal limits to west side municipal limits.
3			K.N.Road from Railway over bridge centre to municipal limits at North, West corner in K.N.road
4			Road leading to Ananthapalli from K.N. road, junction upto municipal limits at North , West corner
5			150' feet wide M.P. road from K.N. road junction to South West corner of municipal limits (150' feet wide M.P. by pass road along the western boundary of the municipality)
6			Existing village road leading to kunchanapalli from the eastern boundary of S.S. tank up to municipal limits at northern boundary.
7			N.H. road abutting to municipal limits at Northern boundary.

TANUKU MUNICIPALITY			
ANNEXURE-I (See Rule-4)			
List of Old/ Existing Built-Up Areas/ Congested Areas/ Settlement/ Gram Khantam/ Abadi			
Sl.No.	**Ward No.**	**Block No.**	**Name of the Lociality / Area**
1	**2**	**3**	**4**
1.	1.		Evullamma Puntha.
2	2		Tanuku Vari Sandu, Attili Vari Street.
3	3		Kobbari Thota Non-Notified Slum area.
4	4		Bejjavarapu Vari Street.
5	5		Teki Vari Street, Maddipati Vari Street, Bodapati Vari Street, Chadalavada Vari Street.
6	6		Shadi Khana area, Polisetti Vari Street, Undrajavarapu vari Street, Sirra Vari Street.
7	7		Gunturi Vari Street, Polavarapu Vari Street, Veldurthi Vari Street, Mission School road Southern side cross roads, Sanaboina Vari Street, Ramalayam Street, Masjid Street, Gummala Vari Street, Teki Vari Street.
8	8		Bejjavarapu Vari Street, Pitta Vari Street, Medikonda Vari Street, Akula Vari Street, Kona Vari Street, Kondalamma Temple Street.
9	9		Nill
10	10		Old Harijana pet, Ambati Vari Street, Burra Vari Street.
11	11		Nill
12	12		Patchi Pala Vari Street, Ambati Vari Street, Dola Vari Street , Church Street Area.
13	13		Medikonda Vari Street, Mullapudi Vari Street, Parimi Vari Sandu, Boidu Vari Street, Kusampudi vari Sandu pindi Vari Street.
14	14		Lanka Vari Street, Lakkoju vari Street, Nandina Vari Street, Tanuku Vari Sandu, Parimi Vari Sandu.
15	15		Palepu Vari Street, Allavarapu Vari Street, Devani Vari Sandu, Anjaneya Swamy temple Street, Vavilala Vari Street, Komaravarapu vari Street, Gandrothi Vari Street, Boidu Vari Street, Ramalayam Street, Parimi Vari Street.
16	16		Kamireddy Vari Street, Tamarapu Vari Street, Indukoori Vari Street, Chinta Kinda Vair Sandu.
17	17		Old Vijaya Bank road (Court complex western side road), Vanguri Vari Street, Valluri Vari Sandu.
18	18		Sangula Vari Sandu, Pothabattula Vari Street, Dr.Krishnamachari Street.
19	19		Karnala Vari Street, Balijepalli Vari Street, Nallamilli Vari Stree,Kattamuri Vari Street, Jeedigunta Vari Street, Srirama Rao Street, Kamarsu Vari Street, chemuturi Vari Street.
20	20		Kottu Vari Street, Pappula Vari Street, Chintalalpudi Vari Street, Tippani Vari Street, Sree Rama Rao Street, Mandapaka Vari Street.
21	21		Gutala Vari Street, Jami Vari Street, Aatham Vari Street
22	22		Mahammadeeyula Street, Nakka Vari Street.
23	23		Ranga Printers Street, Muduganti Vari Street, Pandit raju Vari Street, Vinukonda Vari Street, Vannemreddy Vari Street, Kalidindi Vari Street, Rukruddin Street , Peer Ahmad Street.
24	24		Muduganti Vari Street, Vinukonda Vari Street, Pandit Raju Vari Street, Kuchibotla Vari Street (Indian Bank Northern side Street).
25	25		Nill
26	26		Janatha Hospital Road.
27	27		Nill
28	28		Nill
29	29		Kommala Vari Street.
30	30		Varanasi Vari Sandu.
31	31		Nil
32	32		Bandi Vari Street.

ANNEXURE-II (See Rule-4)			
List of Areas Prohibited for High Rise Buildings			
Sl. No	**Ward No.**	**Block No.**	**Name of the Locality / Area**
1	**2**	**3**	**4**
1	---	---	All the congested areas and localities mentioned in the item (1) & (2) , except plots

ATMAKUR MUNICIPALITY			
ANNEXURE-I (See Rule-4)			
List of Old/ Existing Built-Up Areas/ Congested Areas/ Settlement/ Gram Khantam/ Abadi			
Sl.No.	Ward No.	Block No.	Name of the Lociality / Area
1	2	3	4
1	--	--	Panta Veedhi
2	--	--	Challa Veedhi
3	--	--	Yadava Street
4	--	--	Mutharasi Street
5	--	--	Kandi Street
6	--	--	Thoorpu Veedhi
7	--	--	Padamata Muslim Street
8	--	--	Rajaka Street
9	--	--	Arundhathi Palem
10	--	--	Harijana Wada
11	--	--	L.R.Palli Muslim Street
12	--	--	Narayana Rao Pet
13	--	--	North Balija Street
14	--	--	Nellore Palem (except Main Bazar)

ANNEXURE-II (See Rule-4)			
List of Areas Prohibited for High Rise Buildings			
Sl. No	Ward No.	Block No.	Name of the Locality / Area
1	2	3	4
1	--	--	Panta Veedhi
2	--	--	Challa Veedhi
3	--	--	Yadava Street
4	--	--	Mutharasi Street
5	--	--	Kandi Street
6	--	--	Thoorpu Veedhi
7	--	--	Padamata Muslim Street
8	--	--	Rajaka Street
9	--	--	Arundhathi Palem
10	--	--	Harijana Wada
11	--	--	L.R.Palli Muslim Street
12	--	--	Narayana Rao Pet
13	--	--	North Balija Street
14	--	--	Nellore Palem (except Main Bazar)
15	--	--	Main Bazar
16	--	--	Jagannadharao Pet

GUDUR MUNICIPALITY			
ANNEXURE-I (See Rule-4)			
List of Old/ Existing Built-Up Areas/ Congested Areas/ Settlement/ Gram Khantam/ Abadi			
Sl.No.	**Ward No.**	**Block No.**	**Name of the Lociality / Area**
1	**2**	**3**	**4**
1	2	3rd ward Revenue Block Part	Banigisaheb Peta: D.No. 3/1 to 3/89, 3/95 to 3/120, 3/127 to 3/136-3, 3/139-3 to 3/150-60
2		3rd ward Revenue Block Part	Janardhana Reddy Colony: D.No. 3/168-134 to 3/168/140, 3/168/130 to 3/168/128, 3/168/129 to 3/169/123, 3/168/116 to 3///168/107, 3/169/94 to 3/168/100, 3/168/93 to 3/168/86, 3/168/163 to 3/168/100, 3/168/79 to 3/168/57, 3/168/62 to 3/169/168, 3/168/73 to
3	5 & 6	10th Revenue Block part	Satrapu Street by Namaz Katta Street - D.No. 10/17 to 10/30, 10/358-A to 10/457/6
4	6	10	Arundhathi Palem, Ashok Nagar - D.No. 10/84-1 to 10/318/2
5	7	11	Ashok Nagar, Harijanapalem - D.No. 11/213 to 11/318-1, 11/337 to 11/398/61, 11/400 to 11/582
6	24	1	Indira Nagar - D.No. 1/460 to 1/461-79 (Grama Nattham)
7	29	1	Harijanapalem EVR Palli - D.No. 1/136 to 1/208
8	31	2	Chimpiri Nayudupeta - D.No. 2/361/12 to 2/362, 2/371 to 2/371/2, 2/376 to 2/403

ANNEXURE-II (See Rule-4)			
List of Areas Prohibited for High Rise Buildings			
Sl. No	**Ward No.**	**Block No.**	**Name of the Locality / Area**
1	**2**	**3**	**4**
1			Banigisaheb Peta
2			Janardhana reddy colony
3			Setrapu Street & Namaz Katta Street
4			Arundhati Palem & Ashok Nagar
5			Ashok Nagar, Harijan Palem
6			Indira Nagar
7			Harijana Palem , EVR Palli
8			Chimpirinayudu Peta

KAVALI MUNICIPALITY			
ANNEXURE-I (See Rule-4)			
List of Old/ Existing Built-Up Areas/ Congested Areas/ Settlement/ Gram Khantam/ Abadi			
Sl.No.	Ward No.	Block No.	Name of the Lociality / Area
1	2	3	4
1.	1	Block No. 1	Darblavari Street (Eastern side)
2.	1	4	Kalidasu Vari Street
3.	1	5	Karuvadi Vari Street
4.	1	6	Nusetty Vari Street
5.	1	7	Thammalagunta Vari Street
6.	1	8	Dakavarapu Vari Street
7.	1	9	Kasturi Vari Street
8.	1	10(P)	Kasavaraju Vari Street (Behind Irrigation Canal (east side))
9.	1	11	Oruganti Vari Street
10.	1	12	Vavilaala Vari Street
11.	1	13	Patakachari Vari Street
12.	1	14	Kaliki Vari Street
13.	1	15	Kakani Vari Street
14.	1	16	Nallamalapu Vari Street
15.	1	17	Vemireddy Vari Street
16.	1	18	Gudla Vari Street
17.	1	19	Eethamukkala Vari Street
18.	1	20	Kondinne Girijana Colony
19.	1	21	Banka Vari Street
20.	2	1	Karuvadi Vari Street (Western side)
21.	2	2	Darbala Vari Street
22.	2	3	Dittakavai Vari Street
23.	2	5	Kummari Vari Street
24.	2	6	Ramthumiya Vari Street
25.	2	7	Thoorupu Vadde Palem
26.	2	9	Varava Katta Street
27.	2	10	Shamshuddin Street
28.	2	11 (P)	Avula Vari Street (Behind irrigation canal Eastern side up to Sivalayam Street
29.	2	12	Alahari Vari Street
30.	2	13	Palaadugu Vari Street
31.	2	15	Seshacharyulu Street
32.	2	16	Pothuru Vari Street
33.	2	17	Dastagiri Saheb Street
34.	3	1	Natha Vari Street
35.	3	3	Mekha Vari Street
36.	3	4	Yadlapudi Vari Street
37.	3	5	Duvvuru Vari Street
38.	3	7	Makkana Vari Street
39.	3	8	Inkollu Vari Street
40.	3	9	Kanyakaparameswari Temple Street
41.	3	10	Kotha Bazar
42.	3	11	Munaga Vari Street
43.	3	15	Thiyabindi Vari Street
44.	4	1	Vemireddy Vari Street
45.	4	2	Eethamukkala Vari Street
46.	4	3	Rachavepachettu Vari Street
47.	4	4	Baliboinayana Vari Street
48.	4	5	Bathenavari Street
49.	4	6	Ramireddy Vari Street
50.	4	7	Kata Vari Street
51.	4	8	Kurapati Vari Street
52.	4	9	Yadavapalem
53.	4	10	Akkamma Bhavi Street
54.	4	11	Samadi Vari Street
55.	4	13	Gajula Vari Street
56.	4	15	Panchagunla Vari Street
57.	4	16	Nathavari Street
58.	4	17	Musunuru Vari Street
59.	4	19	Vippaguni Vari Street
60.	5	1 (P)	Gurram Vari Street (Jonnaigunta Area (Old Town)

61.	5	2	SathaniVari Street
62.	5	3	Bommareddy Vari Street
63.	5	4	Kashim Saheb Street
64.	5	5	Tummala Vari Street
65.	5	6	Konangi Vari Street
66.	5	7	Annam Vari Street
67.	5	9	Yenamala Vari Street
68.	5	10	Annaloori Vari Street
69.	5	12	Chejarla Vari Street
70.	5	13	Pokala Vari Street
71.	5	16	Sarvabotla Vari Street
72.	5	17	Bhaskarunk Vari Street
73.	5	19	Malle Vari Street
74.	5	20	Vengaiah Gari Palem
75.	6	1	Ishakmiya Vari Street
76.	6	2	Gaadi Vari Street
77.	6	3	Panta Kaluva donka
78.	6	5	Pinnamaraju Street
79.	6	6	Chejarla Vari Street
80.	7	2	Peerla Chavadi Street
81.	7	3	Pulikonda Vari Street
82.	7	5	Murthysetty Vari Street
83.	7	6	Vayunandanapress Street
84.	7	7	Atmakuri Vari Street
85.	7	8	Katamreddy Vari Street
86.	7	9	Peddavarapu Vari Street
87.	7	10	Vindooru Vari Street
88.	7	11	Sriramgiri Vari Street
89.	7	12	Achari Street
90.	7	13	Bhavani Saw Mill Street
91.	7	14	Kamaati Vari Street
92.	7	16	Khasim Sahib Street
93.	7	17	Maddela Vari Street
94.	7	18	Saidu Saheb Street
95.	7	19	Jammu Vari Street
96.	7	20	Methuku Vari Street
97.	7	21	Suvarthmma Street
98.	7	22	Pallepothula Vari Street
99.	7	23	Yekula Vari Street
100	7	24	Khadu Saheb Street
101	7	25	Yaanadi colony
102	7	26(P)	Chevuru Vari Thota (Except Veturu Vari Street & vukuntapuram 1st road)
103	7	27	Tiles Factry Girijana Colony (Except Main road (go to Kavali Pedda Cheruvu)
104	7	28	Rajaka Street
105	8	4	Batala Vari Street
106	8	5	Nagisetty Vari Street
107	8	6	Amancherla Vari Street
108	8	7	Gonugunta Vari Street
109	8	8 (P)	Paleti Vari Street (Between Jonnalagadda Vari Street Center to back side of Saimahal Theatre)
110	8	10	Pendyam Vari Street
111	8	11	Avva Gari Street
112	8	13	Godown Street
113	8	14	Chelamcherla Vari Street
114	8	15	Mallela Vari Street
115	8	16	Anala Vari Street
116	8	17	Ratnam Vari Street
117	8	18	Devasthanam Vari Street
118	8	19	Velamuri Vari Street
119	8	20	Vengamamba Rice Mill Street
120	8	23	Munaga Vari Street
121	8	24	Gollamoodi Vari Street
122	8	25	Burla vari Street
123	8	26	Medikonda Vari Street
124	8	27 (P)	Hanumakonda Vari Street (Between Vellamuri Vari Street to Purushotham Vari Street)
125	8	28	Purushottam Vari Street

126	8	30(P)	Gandhi Colony (except vykuntapuram 1st and 3rd lane)
127	8	31	Gandhi Colony
128	8	32	Municipal Workers Colony
129	8	33	Municipal Workers Colony
130	8	34	Janda Chettu Street
131	8	35	Janda Chettu Street
132	8	37	Sucheta Nagar
133	8	38	Sucheta Nagar
134	8	39	Gandhi Colony
135	8	40	Yanadhi Colony
136	9	2	Bandiladoddi Street
137	9	3	Makani Vari Street
138	9	4	Bandla Vari Street
139	9	5	Bogyam Vari Street
140	9	6	Poleramma Street
141	9	7	Singila Vari Street
142	9	8	Padamara Vaddepalem
143	9	9	Rama Mandiram Street
144	9	10	Tanneru Vari Street
145	9	11	Bellamkonda Vari Street
146	9	12	Gunji Vari Street
147	9	13	Duvvuru Vari Street
148	9	14	Mosque Street
149	9	15	Thatavarthi Vari Street
150	9	16	Doraswani Vari Street
151	9	17	Kunam Vari Street
152	9	18	Annadatha Vari Street
153	9	19	Manikala Vari Street
154	9	21	Jaladanki road
155	9	22	Municipal Yanadi Colony
156	9	23	Kotamitta vari Street
157	9	27	Poola Bazar
158	10	2	Ponaka vari Street
159	10	3	Kondaraju Vari Street
160	10	4	Yaddanapoodi Vari Street
161	10	5	Amancherla Vari Street
162	10	7	Desabatla Vari Street
163	10	9	Daara Vari Street
164	10	10	Mutharaju Vari Street
165	10	12	Suvarthamma Vari Street
166	10	13	Chillara Vari Street
167	10	14	Kanumalla Vari Street
168	10	17	Dundigam Vari Street
169	10	26	Medisetty Vari Street
170	10	27	Pasupuleti Vari Street
171	10	28	Muppasani Vari Street
172	10	30	Cherukuru Vari Street
173	10	31	Mittapalem area
174	10	35	Co-operative Society colony 4th Street
175	10	36	Bezawada Vari Street
176	10	37	Tolgate Street
177	10	39	Rasam Vari Street
178	10	45	Yanadhi Colony
179	10	46 (P)	Kacherimetta (Except Balaji Temple street, Gudesala road, Fire station road, Tajmal Tea center road.
180	10	47 (P)	Kacherimetta (Except Balaji Temple street, Gudesala road, Fire station road, Tajmal Tea center road.
181	10	48 (P)	Kacherimetta (Except Balaji Temple street, Gudesala road, Fire station road, Tajmal Tea center road.
182	10	49 (P)	Kacherimetta (Except Balaji Temple street, Gudesala road, Fire station road, Tajmal Tea center road.
183	10	50 (P)	Kacherimetta (Except Balaji Temple street, Gudesala road, Fire station road, Tajmal Tea center road.
184	11	3	Swayampakula Vari Street
185	11	4	Kasai Street - I
186	11	5	Kasai Street - 2
187	11	6	Salaam Mohiddin Street
188	11	7	Daggumati Vari Street
189	11	8	Harijanapalem Street

190	11	9	Parri Vari Street
191	11	10	Marapudi Vari Street
192	11	11	Yellanti Vari Street
193	11	13	Chevu Vari Street
194	11	14	Davuloori Vari Street
195	11	15	Milatary ground street
196	11	17	Chavadi Street
197	11	18	Boddu Vari Street
198	11	19	Khaki Vari Street
199	11	20	Mathamma Gudi Street
200	11	21	Ambedkar Nagar
201	11	25	Adapala Vari Street
202	11	26	Kethireddy Vari Street
203	11	27	Baddepudi Vari Street
204	11	28	Gadamsetty Vari Street
205	11	29	Mahipal Singh Street
206	11	30	Chakali Vari Street

ANNEXURE-II
(See Rule-4)

List of Areas Prohibited for High Rise Buildings

Sl. No	Ward No.	Block No.	Name of the Locality / Area
1	2	3	4
1.	1	2	Vishnalayam Street (from Darbhala Vari Street Center to Dodla Vari Street (Southern side)
2.	2	3	Dodla Vari Street
3.	3	4	Vishnalayam Street (From Trunk road Entrance to Darbhala Vari Street Center (Southern side)
4.	4	8	Trunk road (From Vishnalayam Street center up to Thummalapenta road)
5.	5	14	Satram Street (devi Theatre road)
6.	6	2	Badhava Street
7.	7	6	Vishnalayam Street (From Trunk road Entrance to Natha Vari Street Center (Nothern side)
8.	8	12	Trunk road (From Vishnalayam Street center up to Gurram vari Street)
9.	9	13	Gurrm Vari Street (From Five lamps center up to Bhadava center (Southern side)
10.	10	14	Dodla Vari Street
11.	11	8	Kukkalagunta Bhadava Street
12.	12	20	Vishnalayam Street (from Darbhala Vari Street Center to Dodla Vari Street (Nothern side)
13.	13	8	Puchalapalli vari Street
14.	14	11	Poonuru Vari Street
15.	15	14	Pothuluri Vari Street (Street Eastern side)
16.	16	15	Trunk road (From five lamps center to Vikruthi vari street center (Southern side)
17.	17	18	Vikruthi Vari Street (Street Southern side)
18.	18	4	Pothuluri Vari Street (Western side)
19.	19	7	Vikruthi Vari Street (Street Northern side)
20.	20	8	Thrunk road (Both sides)
21.	21	9	Thita Vari Street
22.	22	10	Kona vari Street
23.	23	11	Chavadi Street
24.	24	12	Kamaati Vari Street
25.	25	13	Kolliboyina Vari Street
26.	26	14	Palliboyina Vari Street
27.	27	1	Trunk road (From Janda Chettu Center up to Konduru Vari Street Center (Trunk road western side)
28.	28	4	Konduru vari Street
29.	29	15	Chikatithopu Street
30.	30	26 (P)	Chevuru Vari Thota (Veturu Vari Street & Vukuntapuram 1st road only)
31.	31	1	Trunk road (From Konduru Vari Street Center up to Cinima Hall road Center (Trunk road western side)
32.	32	2	Jonnalagadda Vari Street
33.	33	3	Jonnalagadda Vari Street
34.	34	8(P)	Paleti vari Street (Between Latha Theatre street up to Gollamudi vari street

35.	35	9	Bytakummara Vari Street
36.	36	12	Peddapavani Street (Northern side of Peddapavani road)
37.	37	21	Kanyakaparameswari Rice Mill Street
38.	38	22	Jayalakshmi Rice Mill road
39.	39	27 (P)	Hanumakonda vari Street (Between Purushotham Vari Street to Konduru vari Street)
40.	40	29	Konduru vari Street
41.	41	30 (P)	Gandhi colony (Except Vykuntapuram 1st and 3rd lane)
42.	42	36	Tiles Factory road
43.	43	1	Kalugolla Temple street (Peddapavani road)
44.	44	20	Railway Station Street
45.	45	24	Railway Station Street
46.	46	25	Vinayaka Rao Street (North Janatha pet)
47.	47	26	J.B. College street (North Janatha Pet)
48.	48	1	Railway Station road
49.	49	6	Banglow Street
50.	50	8	Raja Vari Street
51.	51	11	Allam Vari Street
52.	52	15	Trunk road (From Railway Station road center up to Municipal limits (Trunk road Western side)
53.	53	16	Udayagiri road
54.	54	18	Jaladanki road
55.	55	19	Sola Vari Street
56.	56	20	Christen pet 6th lane
57.	57	21	Christen pet 5th lane
58.	58	22	Christen pet 4th lane
59.	59	23	Christen pet 3rd lane
60.	60	24	Christen pet 2nd lane
61.	61	25	Christen pet 1st lane
62.	62	29	Mission Compound
63.	63	32	Co-Op Society Colony 1st Street
64.	64	33	Co-Op Society Colony 2nd Street
65.	65	34	Co-Op Society Colony 3rd Street
66.	66	38	Yarragudi vari Street
67.	67	40	Bapatla Vari Street
68.	68	41	Kesari Vari Street
69.	69	42	Kakumani Vari Street
70.	70	43	Adurthi Vari Street
71.	71	44	Visvodaya High School
72.	72	44	Bapuji Colony (IDSMT Layout)
73.	73	46 (P)	Kacherimetta (Only Balaji Temple Street, Gudesela Road, Fire Station road, Tajmal Tea center road)
74.	74	47 (P)	Kacherimetta (Only Balaji Temple Street, Gudesela Road, Fire Station road, Tajmal Tea center road)
75.	75	48 (P)	Kacherimetta (Only Balaji Temple Street, Gudesela Road, Fire Station road, Tajmal Tea center road)
76.	76	49 (P)	Kacherimetta (Only Balaji Temple Street, Gudesela Road, Fire Station road, Tajmal Tea center road)
77.	77	50 (P)	Kacherimetta (Only Balaji Temple Street, Gudesela Road, Fire Station road, Tajmal Tea center road)
78.	78	57	Indira colony
79.	79	58	Indira colony
80.	80	1	Trunk road (From Tummalapenta road center up to Municipal limits (Trunk road Eastern side)
81.	81	2	Thummalapenta road
82.	82	12	Harijana Hostel Street)
83.	83	16	Gosala Vari Street
84.	84	22	Travelers Bandlow street
85.	85	23	Dantham Vari Street
86.	86	24	Ravulakollu vari street
87.	87	31	Ramachandrasingh street, Pullareddy nagar
88.	88	32	Brundhavanma clony
89.	89	33	Vengal Rao Nagar

NELLORE MUNICIPAL CORPORATION			
ANNEXURE-I (See Rule-4)			
List of Old/ Existing Built-Up Areas/ Congested Areas/ Settlement/ Gram Khantam/ Abadi			
Sl.No.	**Ward No.**	**Block No.**	**Name of the Lociality / Area**
1	**2**	**3**	**4**
1	24	--	Padarupalli PH Colony
2	2	--	Dr. Zakir Hussaian Nagar (Extension)
3	9	--	Kusuma Harijanawada
4	19	--	Muthyalapalem - III
5	11	--	Rayapu Harijanawada
6	24	--	Padarupalli Old Village
7	14	--	Balija Palem old village
8	11	--	Saraswathi Nagar (Near NTR Nagar)
9	20	--	Gilaka Bavi Sangam
10	20		Yerra Katta Harijanawada
11	14	--	Vepadaruvu
12	11	--	Venugopal Swamy Temple lands (NTR nagar)
13	15	--	Chikala Sangam
14	21	--	Ananda Nagar
15	16	--	Akuthota Harijanawada Old Village
16	17	--	Kondayapalem Harijanawada (Village)
17	50	--	Gandhi Girijana Colony
18	14	--	Rajiv Gandhi Nagar
19	5	--	Jafar Saheb Kalva Katta
20	8	--	Arundhatiya Palem
21	13 & 15	--	Gurralamagudu Sagam
22	45	--	Porlu Katta
23	25	--	Ramachandra Reddy Nagar
24	31	--	Dongalabavi Sangam
25	37	--	Konda Dibba
26	45	--	Kotamitta (PH Quarters)
27	16	--	UCO Nagar
28	10	--	Kamati Harijanawada
29	14	--	Velamvari Dinne
30	25	--	Venkata Reddy Nagar
31	19	--	Pacha Vari Dibba
32	1	--	Venkateswarapuram
33	20	--	Kotalamma Dibba
34	24	--	Drivers Colony I & II
35	23	--	Vedayapalem Arundatiya Palem
36	47	--	Sreenivasa Puram
37	42	--	Rajendra Nagar
38	46	--	Thukumanu Mitta
39	10	--	Ram Nagar Scavengers Colony
40	33	--	Kranti Nagar
41	32	--	Ambedkar Nagar
42	34	--	Neelagiri Sangam

ANNEXURE-II (See Rule-4)			
List of Areas Prohibited for High Rise Buildings			
Sl. No	**Ward No.**	**Block No.**	**Name of the Locality / Area**
1	**2**	**3**	**4**
1	1	--	Venkateswarapuram Municipal School area, Janardhana Reddy Colony
2	2	--	Barma Shell Gunta, Ahamed Nagar, P.C. Naidu Nagar, Dr. Zakir Hussain Nagar
3	3	--	Srinivasa Nagar, Kisan Nagar, Dr. Zakir Hussain Nagar New Colony, Rajiv Gandhi Colony
4	4	--	Bungalow Thota extension, Yanamala Palem, Venugopala Nagar, Sadavari Palem, Pullamma Satram
5	5	--	Pathivari Street, Weavers Colony, Vengamamba Street, Nagendra Nagar
6	6	--	Lakshmi Puram Part, Jeenigala Vari Street, Sivaji Nagar, Chakali Street part
7	7	--	Prakash Nagar, Stone House pet, Kummari Street, Chakali Street part, Nawab pet.
8	8	--	Rebala Street, Usman Sahib Pet, Tadikala Bazar, Arundati Palem
9	9	--	Bungalow Thota, Kusuma Harijana Wada, Gandla Street, Nazeer Thota, R.K. Nagar, F.C.I. Colony, Shirdi Sai Nagar
10	10	--	Usman Saheb pet, Ram Nagar, CRP Donka, Kamati Harijanawada, NDR Layout
11	11 (P)	--	Kayapu Palem, Saraswathi Nagar (NTR Nagar)
12	12	--	A.C. Nagar, Padmavathi Nagar
13	13	--	Gurrulamadugu Sangham, Balaji Nagar, A.C. Nagar Part
14	14 (P)	--	Balaji Nagar Extension, putta street, Ramji Nagar, Lakshmi Nagar
15	15	--	Chilakala Sangam, Gurralamadugu Sangham, Aditya Nagar
16	18	--	James garden, Venkata Rama Puram, Rama Murthy Nagar Part, Brundavanam, Pogathota
17	19	--	Rama Murthy Nagar Part, Ramalinga Puram, Muthyala Palem, Rami Reddy Canal
18	20	--	Batwadi Palem, Tekkemitta, Magunta Layout, Lectures Colony
19	21 (P)	--	Magenta Layout part, Teachers colony, NGO's Colony, B.V. Nagar
20	22 (P)	--	Uma reddy gunta part, Teachers colomny, NGO's Colony, B.V. Nagar
21	23 (P)	--	B.V. Nagar Part, Old Vedayapalem, Janasakthi Nagar, JL Narayana layout area
22	24 (P)	--	Drivers colony, Wood Complex, Auto Nagar
23	24 (P)	--	Jyothi Nagar, Teachers Colony, Thyagaraja Nagar, Chandramouli Nagar Part
24	25	--	Jyothi Nagar, Teachers colony, Thyagaraja Nagar, Chandramouli Nagar part
25	26	--	Savithri Nagar, Rithwisk Exclave, Gayathri Nagar, Plice Colony, Siromani Nagar, A.C. Stadium
26	27	--	Thikavaram Rami Reddy layout, Kesavulu Nagar, New Miltary colony, Housing Board
27	28	--	NCC Colony, Vengala Rao Nagar Part
28	29	--	New State Bank Colony, Nethaji Nagar Part, Vengalarao Nagar part
29	30	--	Postal colony part, ZP Colony, Lakeview colony part, Lakshmi Narasimha Puram, Sujathamma colony, Club layout, Ambedkar Nagar
30	33	--	Tekkamitta, Saraswathi Nagar, Vemalasetty Sangam, Military Colony, Ram Nagar
31	34	--	Collector Bungalow, Neelagiri Sangam, DKW college
32	35	--	Fathekhanpet, Pension Lane, Tirispet, Kandadibba, Victoria gardens
33	36	--	Brahmana Street, Rajagari Street, Mulapet part
34	37	--	Pallimitta, Lalathota, Sivalayam area, Rami Reddy Bungalow
35	38 (P)	--	Waheb Pet, Jublee Hospital area, District Court, Somasekhara Puram
36	44 (P)	--	Mansoor Nagar, Khuddus Nagar, Walkers road, Genlus School area, VBS Kalyana Mandapam
37	45 (P)	--	Porlukatta, Gundala Subba Reddy Thota, Muicipal Corporaiton area, DM & HO office

38	46	--	Thukumnmitta, Model High School, Pollukatta, B.Ed College, Sundaram Vari Street, Srinivasa puram
39	47	--	Ranaganayakula Pet, Kamakshi Nagar, Santha pet Part, Uppalapalem, Pinakini Park area
40	48	--	Kapadipalem, ABM compound, Taluk office
41	49	--	Rail Veedi, Gopuram Street, Golla Street, Isuka Donka Road part, Chitrakutam, Muslim Street
42	50	--	Gandhi Girijana Colony, Milk Dairy area, Saluchintala

SULLURPET MUNICIPALITY			
ANNEXURE-I (See Rule-4)			
List of Old/ Existing Built-Up Areas/ Congested Areas/ Settlement/ Gram Khantam/ Abadi			
Sl.No.	**Ward No.**	**Block No.**	**Name of the Lociality / Area**
1	**2**	**3**	**4**
1	16	10 Revenue Block part, in S.No. 17	Fish Market Street
2	16	10 Revenue Block part, in S.No. 18	Bandaru Raja Street
3	15	9 Revenue Block part, in S.No. 18	Beerakavari Street
4	17	12 Revenue Block part, in S.No. 53	Indira Nagar
5	19	12 Revenue Block part, in S.No. 66	Johnsi Nagar
6	19	12 Revenue Block part, in S.No. 67	Sanjeevaiah Nagar
7	19	12 Revenue Block part, in S.No. 82	Kavali Street
8	17	11 Revenue Block part, in S.No. 18	Chakali Street
9	8	7 Revenue Block part, in S.No. 56, 57	Palavallivari Street
10	5	5 Revenue Block part, in S.No. 22, 20	Krishnaveni Nagar
11	4	4 Revenue Block part, in S.No. 27	Vatrapalem
12	17	8 Revenue Block part, in S.No. 44	Bapuji Colony (Girijana)
13	20	13 Revenue Block Part in S.No. 80, 90, 92, 91, 93, 12	

ANNEXURE-II (See Rule-4)			
List of Areas Prohibited for High Rise Buildings			
Sl. No	**Ward No.**	**Block No.**	**Name of the Locality / Area**
1	**2**	**3**	**4**
1			Fish Market Street
2			Bandaruraja Street
3			Beerakavri Street
4			Indira Nagar
5			Johnsi Nagar
6			Sanjeev Nagar
7			Kavali Street
8			Chakali Street
9			Palavalli Street
10			Krishnaveni Nagar
11			Vatrapalem
12			Bapuji Colony (Girijana Colony)
13			Sulluru Harijanawada

VENKATAGIRI MUNICIPALITY			
ANNEXURE-I (See Rule-4)			
List of Old/ Existing Built-Up Areas/ Congested Areas/ Settlement/ Gram Khantam/ Abadi			
Sl.No.	**Ward No.**	**Block No.**	**Name of the Lociality / Area**
1	**2**	**3**	**4**
1	1st Part	1-228 to 1-246	Bangarupeta
2	1st Part	1-408 to 1-419	Bangarupeta
3	2nd part	2-328 to 2-345	Bangarupeta
4	3rd part	3-1 to 3-24	Boppapuram BC Colony
5	3rd part	3-37 to 3-138	Boppapuram BC Colony
6	4th part	4-21 to 4-48	Boppapuram Gandhi Nagar
7	4th part	4-95 to 4-149	Boppapuram Gandhi Nagar
8	4th part	4-207 to 4-330	Boppapuram Sai Colony
9	4th part	4-565 to 4-615	Rehamth Nagar

10	5th part	5-31 to 5-69	Dommarapalem
11	5th part	5-252 to 5-261	Collegemitta
12	5th part	5-265 to 278	Collegemitta
13	5th part	5-293 to 5-316	Collegemitta
14	5th part	5-369 to 5-378	Collegemitta
15	5th part	5-383 to 5-398	Collegemitta
16	5th part	5-407 to 5-417	Collegemitta
17	9th ward	9-36 to 9-42	Yekalavya Nagar, RTC Bus Depot Back side
18	12th part	12-38 to 12-152	Mallamma Temple Street
19	12th part	12-162 to 12-177	Mallamma Temple Street
20	12th part	12-199 to 12-238	Mallamma Temple Street
21	12th part	12-286 to 12-321	Mallamma Temple Street
22	12th part	12-346 to 12-363	Mallamma Temple Street
23	12th part	12-395 to 12-412	Mallamma Temple Street
24	13th part	13-127 to 13-171	Anandhapuram
25	13th part	13-198 to 13-204	Anandhapuram
26	15th part	15-152 to 15-167	Gollapalem
27	15th part	15-180 to 15-272	Gollapalem
28	15th part	15-310 to 15-272	Lallagari Street
29	16th part	16-89 to 16-151	Balamuruvari Street
30	16th part	16-154 to 16-195	Thajmahal Street
31	16th part	16-204 to 16-255	Purnasing Street
32	16th part	16-242 to 16-279	Police Station Street
33	16th part	16-302 to 16-321	Police Station Street
34	16th part	16-581 to 16-611	Gadivari Street
35	17th part	17-72 to 17-104	Kalivelamma Temple Street
36	17th part	17-105 to 17-119	Kalivelamma Temple Street
37	17th part	17-125 to 17-162	Kalivelamma Temple Street
38	18th part	18-183 to 18-220	Kummariveedi
39	18th part	18-221 to 18-339	Gajulaveedi
40	18th part	18-430 to 18-434	Saliveedi Part
41	19th part	19-430 to 19-45	Pathivari Sandhu
42	19th part	19-96 to 19-105	Kalapativari Sandhu
43	19th part	19-190 to 19-199	Nagiri Sandhu
44	19th part	19-335 to 19-349	Besthapalem
45	20th part	20-53 to 20-164	Jettypalem
46	20th part	20-192 to 20-203	Jettypalem
47	20th part	20-213 to 20-238	Balijapalem
48	21st part	21-33 to 21-57	Nagulaguntapalem
49	21st part	21-141 to 21-150	Ontelaveedi
50	21st part	21-158 to 21-174	Peerjathipeta
51	21st part	21-288 to 21-292	Masapet Part
52	21st part	21-281 to 21-332	Masapet Part
53	21st part	21-235 tp 21-278	Masapet Part
54	21st part	21-307 to 21-312	Masapet Part
55	22nd part	22-163 to 22-466	Peerjathipeta
56	22nd part	22-504 to 22-509	Bhuduruvari Street
57	22nd part	22-514 to 22-599	Sunnapu Street
58	23rd Part	23-05 to 23-37	Puttamrajuvari Street
59	23rd Part	23-42 to 23-63	Pathakota
60	23rd Part	23-64 to 23-148	Guruvlavari Street
61	1st ward	S.No. 35-6	Bangarupet (Grama Kantam)
62	1st ward	S.No. 35-7	Bangarupet (Grama Kantam)
63	1st ward	S.No. 35-8	Bangarupet (Grama Kantam)
64	1st ward	S.No. 85	Bangarupet (Grama Kantam)
65	1st ward	S.No. 90	Bangarupet (Grama Kantam)
66	1st ward	S.No. 93	Bangarupet (Grama Kantam)
67	1st ward	S.No. 100	Bangarupet (Grama Kantam)
68	1st ward	S.No. 103-1	Bangarupet (Grama Kantam)
69	1st ward	S.No. 103-2	Bangarupet (Grama Kantam)
70	1st ward	S.No. 107-2	Bangarupet (Grama Kantam)
71	1st ward	S.No 108	Bangarupet (Grama Kantam)
72	1st ward	S.No. 109	Bangarupet (Grama Kantam)
73	3rd Ward	S.No. 155-1	Boppapuram (Grama Kantam)
74	5th ward	S.No. 199-2	Ammavaripet (Grama Kantam)
75	8th ward	S.No. 205-9	Periyavaram (Grama Kantam)
76	8th ward	S.No 217-1	Periyavaram (Grama Kantam)
77	8th ward	S.No. 223-1	Periyavaram (Grama Kantam)
78	8th ward	S.No. 223-10	Periyavaram (Grama Kantam)

79	9th ward	S.No. 35-3	Chevireddypalli (Grama Natham)
80	9th ward	S.No. 54-1	Chevireddypalli (Grama Natham)
81	9th ward	S.No. 61-2	Chevireddypalli (Grama Kantam)
82	9th ward	S.No. 79-4	Chevireddypalli (Grama Kantam)
83	9th ward	S.No. 78-13	Chevireddypalli (Grama Kantam)
84	10th ward	S.No. 10-5	Manulalpet (Grama Kantam)
85	10th ward	S.No. 10-11	Manulalpet (Grama Kantam)
86	14th ward	S.No. 39	Dharmapuram (Grama Kantam)
87	Venkatagiri Town	S.No. 104-5	(Grama Kantam)
88		S.No. 106-1	(Grama Kantam)
89		S.No. 109	(Harijana Grama Kantam)
90		S.No. 135	(Grama Kantam)
91		S.No. 233-4	(Grama Kantam)
92		S.No. 251	(Grama Kantam)
93		S.No. 259-6	(Grama Kantam)
94		S.No. 265-1	(Grama Kantam)
95		S.No. 265-2	(Grama Kantam)
96		S.No. 265-3	(Grama Kantam)
97		S.No. 265-4	(Grama Kantam)
98		S.No. 265-5	(Grama Kantam)
99		S.No. 265-6	(Grama Kantam)
100		S.No. 265-7	(Grama Kantam)
101		S.No. 268-15	(Grama Kantam)
102		S.No. 279	(Grama Kantam)
103		S.No. 289 -1	(Grama Kantam)
104		S.No. 289 -2	(Grama Kantam)
105		S.No. 289 -3	(Grama Kantam)
106		S.No. 289 -4	(Grama Kantam)
107		S.No. 289 -5	(Grama Kantam)
108		S.No. 289 -6	(Grama Kantam)
109		S.No. 289 -7	(Grama Kantam)

ANNEXURE-II
(See Rule-4)

List of Areas Prohibited for High Rise Buildings

Sl. No	Ward No.	Block No.	Name of the Locality / Area
1	**2**	**3**	**4**
1	1st Part	1-228 to 1-246	Venugopal Swamy Street, Bangarupeta
2	1st Part	1-408 to 1-419	Palliveedi, Bangarupeta
3	2nd part	2-328 to 2-345	Chakaliveedi, Bangarupeta
4	3rd part	3-1 to 3-24	Boppapuram BC Colony
5	3rd part	3-37 to 3-138	Boppapuram BC Colony
6	4th part	4-21 to 4-48	Boppapuram Gandhi Nagar
7	4th part	4-95 to 4-149	Boppapuram Gandhi Nagar
8	4th part	4-207 to 4-330	Boppapuram Sai Colony
9	4th part	4-565 to 4-615	Rehamth Nagar
10	5th part	5-31 to 5-69	Dommarapalem
11	5th part	5-252 to 5-261	Collegemitta
12	5th part	5-265 to 278	Collegemitta
13	5th part	5-293 to 5-316	Collegemitta
14	5th part	5-369 to 5-378	Collegemitta
15	5th part	5-383 to 5-398	Collegemitta
16	5th part	5-407 to 5-417	Collegemitta
17	9th ward	9-36 to 9-42	Yekalavya Nagar, RTC Bus Depot Back side
18	12th part	12-38 to 12-152	Mallamma Temple Street
19	12th part	12-162 to 12-177	Mallamma Temple Street
20	12th part	12-199 to 12-238	Mallamma Temple Street
21	12th part	12-286 to 12-321	Mallamma Temple Street
22	12th part	12-346 to 12-363	Mallamma Temple Street
23	12th part	12-395 to 12-412	Mallamma Temple Street
24	13th part	13-127 to 13-171	Anandhapuram
25	13th part	13-198 to 13-204	Anandhapuram
26	15th part	15-152 to 15-167	Gollapalem
27	15th part	15-180 to 15-272	Gollapalem
28	15th part	15-310 to 15-272	Lallagari Street
29	16th part	16-89 to 16-151	Balamuruvari Street
30	16th part	16-154 to 16-195	Thajmahal Street
31	16th part	16-204 to 16-255	Purnasing Street

32	16th part	16-242 to 16-279	Police Station Street
33	16th part	16-302 to 16-321	Police Station Street
34	16th part	16-581 to 16-611	Gadivari Street
35	17th part	17-72 to 17-104	Kalivelamma Temple Street
36	17th part	17-105 to 17-119	Kalivelamma Temple Street
37	17th part	17-125 to 17-162	Kalivelamma Temple Street
38	18th part	18-183 to 18-220	Kummariveedi
39	18th part	18-221 to 18-339	Gajulaveedi
40	18th part	18-430 to 18-434	Saliveedi Part
41	19th part	19-430 to 19-45	Pathivari Sandhu
42	19th part	19-96 to 19-105	Kalapativari Sandhu
43	19th part	19-190 to 19-199	Nagiri Sandhu
44	19th part	19-335 to 19-349	Besthapalem
45	20th part	20-53 to 20-164	Jettypalem
46	20th part	20-192 to 20-203	Jettypalem
47	20th part	20-213 to 20-238	Balijapalem
48	21st part	21-33 to 21-57	Nagulaguntapalem
49	21st part	21-141 to 21-150	Ontelaveedi
50	21st part	21-158 to 21-174	Peerjathipeta
51	21st part	21-288 to 21-292	Masapet Part
52	21st part	21-281 to 21-332	Masapet Part
53	21st part	21-235 tp 21-278	Masapet Part
54	21st part	21-307 to 21-312	Masapet Part
55	22nd part	22-163 to 22-466	Peerjathipeta
56	22nd part	22-504 to 22-509	Bhuduruvari Street
57	22nd part	22-514 to 22-599	Sunnapu Street
58	23rd Part	23-05 to 23-37	Puttamrajuvari Street
59	23rd Part	23-42 to 23-63	Pathakota
60	23rd Part	23-64 to 23-148	Guruvlavari Street
61	1st ward	S.No. 35-6	Bangarupet (Grama Kantam)
62	1st ward	S.No. 35-7	Bangarupet (Grama Kantam)
63	1st ward	S.No. 35-8	Bangarupet (Grama Kantam)
64	1st ward	S.No. 85	Bangarupet (Grama Kantam)
65	1st ward	S.No. 90	Bangarupet (Grama Kantam)
66	1st ward	S.No. 93	Bangarupet (Grama Kantam)
67	1st ward	S.No. 100	Bangarupet (Grama Kantam)
68	1st ward	S.No. 103-1	Bangarupet (Grama Kantam)
69	1st ward	S.No. 103-2	Bangarupet (Grama Kantam)
70	1st ward	S.No. 107-2	Bangarupet (Grama Kantam)
71	1st ward	S.No 108	Bangarupet (Grama Kantam)
72	1st ward	S.No. 109	Bangarupet (Grama Kantam)
73	3rd Ward	S.No. 155-1	Boppapuram (Grama Kantam)
74	5th ward	S.No. 199-2	Ammavaripet (Grama Kantam)
75	8th ward	S.No. 205-9	Periyavaram (Grama Kantam)
76	8th ward	S.No 217-1	Periyavaram (Grama Kantam)
77	8th ward	S.No. 223-1	Periyavaram (Grama Kantam)
78	8th ward	S.No. 223-10	Periyavaram (Grama Kantam)
79	9th ward	S.No. 35-3	Chevireddypalli (Grama Natham)
80	9th ward	S.No. 54-1	Chevireddypalli (Grama Natham)
81	9th ward	S.No. 61-2	Chevireddypalli (Grama Kantam)
82	9th ward	S.No. 79-4	Chevireddypalli (Grama Kantam)
83	9th ward	S.No. 78-13	Chevireddypalli (Grama Kantam)
84	10th ward	S.No. 10-5	Manulalpet (Grama Kantam)
85	10th ward	S.No. 10-11	Manulalpet (Grama Kantam)
86	14th ward	S.No. 39	Dharmapuram (Grama Kantam)
87	Venkatagiri Town	S.No. 104-5	(Grama Kantam)
88		S.No. 106-1	(Grama Kantam)
89		S.No. 109	(Harijana Grama Kantam)
90		S.No. 135	(Grama Kantam)
91		S.No. 233-4	(Grama Kantam)
92		S.No. 251	(Grama Kantam)
93		S.No. 259-6	(Grama Kantam)
94		S.No. 265-1	(Grama Kantam)
95		S.No. 265-2	(Grama Kantam)
96		S.No. 265-3	(Grama Kantam)
97		S.No. 265-4	(Grama Kantam)
98		S.No. 265-5	(Grama Kantam)
99		S.No. 265-6	(Grama Kantam)
100		S.No. 265-7	(Grama Kantam)

101		S.No. 268-15	(Grama Kantam)
102		S.No. 279	(Grama Kantam)
103		S.No. 289 -1	(Grama Kantam)
104		S.No. 289 -2	(Grama Kantam)
105		S.No. 289 -3	(Grama Kantam)
106		S.No. 289 -4	(Grama Kantam)
107		S.No. 289 -5	(Grama Kantam)
108		S.No. 289 -6	(Grama Kantam)
109		S.No. 289 -7	(Grama Kantam)

BAPATLA MUNICIPALITY			
ANNEXURE-I (See Rule-4)			
List of Old/ Existing Built-Up Areas/ Congested Areas/ Settlement/ Gram Khantam/ Abadi			
Sl.No.	**Ward No.**	**Block No.**	**Name of the Lociality / Area**
1	**2**	**3**	**4**
1	1, 2, 3, 4, 5, 6, 7, 8 & 9	1, 2, 3	Bethani Colony, Ramakrishna Puram, Putta Bazar, Cristianpet, Chakali Palem, Bhavarajuthota Donka, Scavangers Colony, Rajeev Gandhi Colony, Bhagavathula Vari Veedhi, Daita Vari Veedhi, Inapakottukala Vari Veedhi, Uppalavari Veedhi, Jamedarpet Padamara, Rel
2	10 part, 11, 12 Part, 13, 14 Part	4 part, 5	Padisonpet, Andhra Kesari Nagar, Dhanalakshmi Rice Mill area, Achantaranganayakula Nagar, Viswabrahmina Colony Part, Indira Nagar, Arava Colony, Vengala Vihar, Lectures colony, Trupu Satram, Yadava Palem, Yanadi Sangam, Ponnadavri Veedhi, Chakali Palem, T
3	15, 16, 17, 18, 19 & 20	4 (P), 6, 7, 10 (P), 11(P), 13 (P), 15 (P), 12 (P)	Srungarapuram, Velagavari Deedhi, Nattigunta road, Pindalamarri Vari Veedhi, Seelam Vari Veedhi, Akbarpet, Andrus Pet, Peerla Panja Vari Veedhi, Government Hospital Area, Swami Vivekananda Vari Veedhi, Hans Peta Main road, Tadepalli Vari Veedhi, A.G. Coll
4	21, 22, 23 (P), 24, 25 (P), 26, 27 & 28	8 (P), 9 (P), West Block 2 (P), 3 (P), 4(P), 5 (P), 6(P), 7(P), 12 (P), 13(P), 14, 15 (P)	Dhupisettyvari Veedhi, Desaraju Vari Veedhi, Kamarajuvari Veedhi, Bhimavari Veedhi, Rajasekhar Rao Peta, Kakumanu Vari veedhi, Sanjeev Gandhi Colony, Drivers Colony, Immadisetty Vari Palem Part, Chakalipalem, Tyagarayanagar part, Vijamurivarithota part, J
5	29, 30, 31, 32, 33 & 34	14 (P), 15 (P), 16, 17, 18, 19, West Block 6	Vedantam Vari Veedhi, Patakabel road, Ramamandiram road, Besta Palem, Peda Maseedu Veedhi, Chodagudivari Veedhi, Guntur vari Veedhi, Naralasettyvaripalem connection roads, Islampet connecting roads, Daggumallivari Palem (P) Hayer Nagar, Kummarapalem (P),
	IB:		All notified and Non notified slum areas and Indiramma Housing and EBSH Housing Colonies
	IC:		In case of existing areas not covered in above IA & IB and site not covered in road widening Buildings approvals in interstitial sites may be considered by the sanctioning authority with reasons to be recorded in writing and with height restriction as men
	ID		In all the above areas where the road width is 30 Ft / 9 Mts., and more above, those areas may be considered for construction of buildings as allowed in "Sites in New Areas / Approved Layout areas" Except High Rise Buildings

ANNEXURE-II (See Rule-4)			
List of Areas Prohibited for High Rise Buildings			
Sl. No	**Ward No.**	**Block No.**	**Name of the Locality / Area**
1	**2**	**3**	**4**
. High Rise Buildings are Prohibited in areas mentioned in Annexure - I, where the road is less than 60 feet / 18 Mts.,			

CHILAKALURIPET MUNICIPALITY			
ANNEXURE-I (See Rule-4)			
List of Old/ Existing Built-Up Areas/ Congested Areas/ Settlement/ Gram Khantam/ Abadi			
Sl.No.	Ward No.	Block No.	Name of the Lociality / Area
1	2	3	4
1	2	5	M.V. Narayanapuram (Excepts sites in Ganapavaram Donka road Starting from M.V. Narayanapuram 1 cross road to RTC Depot compound wall East - West corner)
2	3	6, 8	Balanagu Sanyasi Street, Krishnamahal road, Rajaka Street, Redla Bazar, Vinayaka Temple back side area ((1) Except sites in Ganapavaram Donka road starting from Venkata Bhagya Lakshmi Rice Mill southern corner to Police Station road Junction (2) Except si
3	5	9	Jakkampudi Seetharamaiah Hospital area, back side of C.R. Club area (Except sites in 30'-0" road starting from Veluru road Junction to Nehru Nagar Church).
4	13, 14	14, 15	Besthpalem area, Kavamma Gudi area, Medara Bazar (Excluding sites in Sarada High School road (40') from 4 road Junction to Burial ground road junction
5	10, 11, 21	17, 18, 19	Kommaravallipadu, Jagupalem, Bondilipalem, Martur Ramulu area ((1) Excluding sites in CN road (60' as per R.D. Plan) starting from Gantalamma Chettu to K.B. road junction. (2) Excluding sites in Ogeru Vagu road (40') starting from K.B. road junction to Og
6	16	20	Market area ((1) Except sites in 30'-0" road starting from Kalamandir road junction to RR Show room Junction (2) Except sites in 50'-0" road from R.R. Show room Junction to K.B. road Junction).
7	14, 15, 16	21, 22, 23	Maddimallaiah Street, Boppudi Bullodu Street, Devisettyvari Street, Viswa Brahmana Street, Potti Sriramulu Street, Tavva Bapanaiah Street, Chalivendram Bazar, M.V. Street, Nandam Papaiah Street, Damarla Kondaiah Street ((1) Except sites in CN road (30'-0"
8	22	29	Vadderapalem
9	23	30, 31	Gundaiah Thota ((1) Except sites abutting Theatre East side road (30') from K.B. road junction to Ogeru Vagu Donka road junction (2) Except sites abutting Ogeru vagu donka road (30') starting from Jammi Chettu center to Cow shed
10	25, 26, 27, 28	33, 34, 35, 36, 37	Purushothapatnam ((1) Except sites n Purushothapatnam Kotappakonda road (80' MP road) from Door No. 33-550 to Door No. 37-356) (2) Except Sites in Brahman Gari Temple street (40') from Kotappakonda road Junction to Byepass road Junction)

ANNEXURE-II (See Rule-4)			
List of Areas Prohibited for High Rise Buildings			
Sl. No	Ward No.	Block No.	Name of the Locality / Area
1	2	3	4
	(1) All areas and localities mentioned in Annexure - I		
	(2) Sites in the other areas other than the areas in Annexures - I except for plots abutting 18 meters existing roads / proposed Master Plan roads in Town.)		

MACHERLA MUNICIPALITY			
ANNEXURE-I (See Rule-4)			
List of Old/ Existing Built-Up Areas/ Congested Areas/ Settlement/ Gram Khantam/ Abadi			
Sl.No.	**Ward No.**	**Block No.**	**Name of the Lociality / Area**
1	**2**	**3**	**4**
1	1 to 5	15-1 & 15-2 and part of 15-3 in S.Nos 381/3/B2, 388/5 B2, 377/B, 379/8-1	On the Bodu, Nehru Nagar (Except 30'-0" wide roads of any.
2	1 to 5	15-1 & 15-2 and part of 15-3 in S.Nos 314-C, 326-1	Chennakesava Nagar Colony (Except Guntur road and all affected to M.P. roads facing areas)
3	6 to 8 and Eastern side part of 9th Election wards	14-2 & Remaining part of 5-3 in S.Nos. 1077, 1083/2, 1413/3B, 1452/2	Sareen Colony
4	6 to 8 and Eastern side part of 9th Election wards	14-2 & Remaining part of 5-3 in S.Nos. 1076/9/2	Chenchu Colony (side of Gowda Colony)
5	6 to 8 and Eastern side part of 9th Election wards	14-2 & Remaining part of 5-3 in S.Nos. 1453, 1454, 1458, 1459/6, 1461	Rope way colony (except all affected M.P. roads facing areas and existing 30'-0" wide roads)
6	6 to 8 and Eastern side part of 9th Election wards	14-2 & Remaining part of 5-3 in S.Nos. 677/2, 677/3, 677/4, 678/1, 1008, 16/F62	Old Town & back side Chennakesava Temple area and Lingapuram Colony (except M.P. roads)
7	Remaining part of 9th ward, 10th ward and 16th ward and 24th Election wards	1 to 10 blocks in S.No. 748/A, 748/B, 745/A, 745/B, 1040, 1044/B	Old Town & back side Chennakesava Temple area and Lingapuram Colony (except M.P. roads)
8	Remaining part of 9th ward, 10th ward and 16th ward and 24th Election wards	1 to 10 blocks in S.No. 1053/12B, A	S.K.B.R. Govt. College areas (except Srisailam road and all affected M.P. roads facing areas)
9	11 to 15 Election wards	13th block and 14-1 block	Old Vaddera Basthi and 13th block etc., (Except Srisailam road and affected all M.P. roads facing areas)
10	23 to 29 Election wards	11th block, in S.No. 388/5A	Azad Nagar, Ramatalkies surrounding areas (except Guntur road and affection all M.P. roads facing areas)

ANNEXURE-II (See Rule-4)			
List of Areas Prohibited for High Rise Buildings			
Sl. No	**Ward No.**	**Block No.**	**Name of the Locality / Area**
1	**2**	**3**	**4**
1	12 to 15 wards	13th block	Old Pathi Factory area
2	25th to 29th wards	11th Block	Ramatalkies area
3	17th, 18th and 19th wards above 3'-0" wide roads	9th and 10th blocks	S.C. Colony

NARASARAOPET MUNICIPALITY			
ANNEXURE-I (See Rule-4)			
List of Old/ Existing Built-Up Areas/ Congested Areas/ Settlement/ Gram Khantam/ Abadi			
Sl.No.	**Ward No.**	**Block No.**	**Name of the Lociality / Area**
1	**2**	**3**	**4**
1	1	21, 19	Sai Nagar, Chenchu Colony, Chandrababu Naidu Colony, Vaddera Colony, Rangavari Street (P), Yanadi Colony
2	2	20, 19 (P)	Lila Bazar (P), Rangavari Street (P), Attar Bazar, Hanumaiah Nagar, Pulupula vari Street
3	3	18 (P)	Rangavari Street (P), Purushothamachari Street, Lila Bazar, Vangavari Street, Baba Saheb Street
4	3	14 (P)	Medara Bazar, Janda Chettu area, Nimma Thota
5	3	16	Nimma Thota
6	4	14 (P), 15	Panasathota, Opp. Vegetable Market
7	5	17	Christianpalem, Siva Sanjeevaiah Colony
8	6	13 (P)	Babapet, Rahamtulla Nagar, Kamosh Nagar, Yogaiah Nagar, Mohiddin Nagar
9	7	13 (P)	Venkata Reddy Nagar (P), Islampet (P)
10	8	13 (P)	Vengala Reddy Colony (P) Islampet (P)
11	9	13	Sambasivaraopet, Srinivasa Nagar, Yerukala Colony (Vinukonda road)
12	10	12	Bala Yogi Nagar, Kalavakatta (Back side of RTC Depo)
13	14	12 (P)	Khambampalem
14	15	8 (P)	Varavakatta, Kondalaraopet, Kothabavi Bazar
15	16	7(P)	Namburivari Street, Kakumanuvari Street, Majetivari Street, Arakali Bazar
16	17	17 (P), 8(P)	Sreerampuram area, Thogativari street
17	18	9 (P)	Rayapativari Veedhi, Kalki Ramaiah Street, Ramraju Street
18	18	10	Printing Press road, choultry Bazar, Mandavari Street, Rupenaguntavari Street
19	19	10 (P)	Vadderapalem, Arundelpet
20	20, 21	11(P)	Workers colony, Kabela School area, Chowdeswary Temple area
21	23	11 (P)	Navodaya Nagar (P)
22	24	11 (P)	Prasanthi Nagar
23	25	3 (P)	Peddacheruvu West of Byepass road
24	26	3 (P)	East of Byepass road, Rallabandivari Street, Prathipartivari Street, Vangalavari Street
25	27	5 (P)	Rajakawada, Atlurivari Bazar, Pala Bazar, Chengala Raidu Bazar
26	28	4	Pathuru area
27	29	2 (P)	Vucchala Galli, Enugula Bazar, Thalla Bazar
28	30	2 (P)	Avulasatram rear side area, Enugula Bazar (P), Ramaiah Thota
29	31	3 (P)	Mahalakshmi Nagar area, Southern side area (Pedda cheruvu)
30	32	1 (P)	Noor Basha Colony, Mitta Bazar, Sisumandir Donka road
31	33	1 (P)	Satyanarayanapuram, Muttaiah Thota, Garlapadu donka road
32	34	1 (P), 21(P)	Barampet (P), Indira Nagar, Rama Nagar (1st land 2nd street) B.C. Colony

ANNEXURE-II (See Rule-4)			
List of Areas Prohibited for High Rise Buildings			
Sl.No	**Ward No.**	**Block No.**	**Name of the Locality / Area**
1	**2**	**3**	**4**
1	1	21	Sai Nagar,Sattenapalli Main road Eastern side up to 500 Mts.
2	1	19 (P)	Kunisetty Lakshmaiah choultry road
3	2	18	Kota Bazar - Sattenapallli road (Eastern side) up to Dall Mill
4	3	18 (P)	Guntur road, both sides, Chilakaluripet road Guntur road (Azad Street)
5	5	17 (P)	Christianpalem main road
6	4	14 (P)	Vegetable Market to Mallamma Centre , Market centre to Chilakaluripet road (Kummari Bazar)
7	3, 4, 5, 6	16	Mallamma Center up to Municipal limits (Chilakaluripet road both sides)
8	6, 7	13 (P)	Islampet (P), Venkata Reddy Nagar (P)
9	8, 9	13 (P)	Chitralaya Center up to Municipal limits (Kotappakonda road both sides)
10	8	13 (P)	Vengala Reddy Colony (Maszid road) Vengala Reddy Colony to Islampet road)
11	9	13 (P)	Sreenivasa Nagar, Kotappakonda road to Vinukonda road (Link road)
12	9, 10, 14	13 (P)	Market center to Municipal limits, Vinukonda road on both sides
13	10, 11, 12, 13, 14	12	Prakash Nagar area vide sanctioned in detailed T.P. Scheme area in T.P.NO. 12/76
14	12	12	Shalem Nagar, Station road to Up to Municipal limits
15	15, 16, 17	7 (P), 8 (P)	Old Police Station road from Municipal Office centre to Market junction Majetivari Veedhi on both sides (Srirampuram)
16	18	9 (P)	Arundelpet (P)
17	20, 21, 22, 23, 24	11 (P)	Ramireddypet West extension, T.P. Scheme area vide T.P.No. 19/68.
18	18, 19, 20	10 (P)	Arundelpet Annapurnamma Hospital road
19	22, 24	11 (P)	Old Samithi office road, Car Public School up to Palapadu Donka road Municipal Limits
20	21, 24	11 (P)	S.S.N. College Back side road to Palapadu road up to Municipal Limits
21	16, 17, 18, 19, 21, 24, 25,26,27, 29	5 (P), 9 (P), 10 (P)	Palnadu road from Mallamma centre up to Western Municipal limits on both sides
22	21, 22, 23	11 (P)	Govt. S.C. & S.T. Girls Hostel in Rompicherla road up to Municipal Limits (in part of the Industrial area) Navodaya Nagar and Ramireddypet
23	25	3 (P)	N.G.Os Colony and Industrial Estates
24	25, 26, 31,32	1 (P), 3 (P)	SKRBR College to Burnpet Mosque road up to STP road
25	25	3 (P)	Peddacheruvu 9th line Northern side of the Vinayaka Temple to end of the Municipal Community Hall
26	27, 29	5 (P), 2 (P)	From Senkaramatam center up to Sattenapalli road Junction Veda Geethamandir road both sides
27	27, 28, 29, 30	2 (P), 3 (P), 4 (P), 5 (P)	Siva Statue up to Byepas road junction (Srinivasa Hall road)
28	29	2	Rajagari Kota Telephone Exchange office to Dr. Kodela Siva Prasad Hospital road.
29	32, 33, 34	1 (P), 3 (P)	Burnpet
30	1, 3, 29, 30, 32, 34	19 (P), 29(P),6(P), 2(P), 21(P)	Sattenapalli road on both sides from Mallamma center up to Municipal Northern side limits.
31	34	1 (P), 3 (P)	Indira Nagar Colony roads (P)
32	26, 31	3 (P)	Cheruvukatta road

PIDUGURALLA MUNICIPALITY			
ANNEXURE-I (See Rule-4)			
List of Old/ Existing Built-Up Areas/ Congested Areas/ Settlement/ Gram Khantam/ Abadi			
Sl.No.	**Ward No.**	**Block No.**	**Name of the Lociality / Area**
1	**2**	**3**	**4**
1	18, Block No. 8	S.No.159, 160 (P), 163, 164, 165/A, 194, 197/2, 198	RCM Chruch backside, Jamuna School area, Bilal Mosque area, Old Military colony, Vasavi Nagar
2	15, Block No. 9	S.No.161, 162	Old SBI Street, Panchayati Office area, Chairman Street, Pilli Satyanandam Street, Muppuri Kasi Street, Kanyaka Parameswari Temple back side area
3	9, Block No. 16	227, 228, 296, 297, 298, 299	Main road, Anjireddy Hospital Back side
4	12, Block No. 15 & 16	230, 231/A, 233/A, 246/A, 247/A, 248	Nemilireddy Bazar, C.I. Office road, Kummara Palem, Gullapalli donka, Gangamma Temple back side, Sattenapalli Vari Street
5	14, Block No. 12 & 19	231/B, 233/B, 234/2-A, 234/2-B, 235, 236, 237, 241 (P)	Maruthi - Mahalakshmi Back side , PWD Colony
6	12 & 9, Block No. 16	24, 92, 50, 252	High School Back side
7	8, Block No. 16	253, 254/A, 255/A, 258/A, 259/A, 292/A, 302/A, 293/A, 294/A, 295/A	Kummara Palem
8	6, Block No. 7	397/A398, 405, 406, 407, 408, 409, 411, 412, 413, 404 (P), 410 (P), 892/21, 892/22 (P)	MRO's office area
9	5 & 6, Block No. 7	4, 14, 415	CTO's office road
10	2 & 5, Block No. 7	416 (P), 417, 418, 419, 426, 427, 428, 429, 515, 516, 517, 518, 519 (P), 520/A, 526, 527, 528, 536	Bellamkonda donka
11	2, block No. 7	520/B, 521/1, 521/2, 522/2, 522/2, 522/3, 522/4, 523/A, 523/B, 524, 525	Sudaguntala
12	1 & 2, Block No. 4	543, 545, 546, 547, 548, 549, 549, 550, 550, 551, 552/1, 552/2, 553, 554, 555, 556/1, 556/2, 556/3, 557, 558	Sivalayam Street, Pillala Gadda Mandula Gadda
13	20, 1 &2, Block No. 2, 3, 4, 5 & 6	557	Grama Kantam i.e Asram Street, Maya Bazar, Rajaka Street, Yerra Vari Street, Chintala Vari Street, Bali Bazar, Peda Masjid back side area, village chavadi, Boddu rai
14	Note : The sites abutting to the roads having width of 9.00 Mts., and above in the listed areas and proposed Master Plan roads are exempted		
15	Note: All the sites falling in sulms, irrespective of the road width, for all types of buildings, the permissible height of the		

	building is 10 Mts.		

ANNEXURE-II (See Rule-4)			
List of Areas Prohibited for High Rise Buildings			
Sl. No	**Ward No.**	**Block No.**	**Name of the Locality / Area**
1	**2**	**3**	**4**
1	19, Block No. 8	S.No. 159, 160 (P), 163, 164, 165/A, 194, 197/1, 197/2, 198	Railway Station road
2	13, 12 & 9, Block No. 16	S.No. 229 (P), 249 (P) & 250	High School Back side street
3	19, Block No. 8	S.No. 157/2	Road Opposite APSRTC Bus Station
4	19, Block No. 8	48 (P), 86 (P) and 45 (P), 46, 50 (P), 129 (P), 130 (P)	Kallam Town ship Graeen City Phase - I and Phase 2 i.e L.P.No. 79/2008 and L.P.No. 25/2009.
5	Note All the roads that are having width of 18.00 Mts., and above in approved layouts and proposed in Master Plan are exempted.		

PONNUR MUNICIPALITY			
ANNEXURE-I (See Rule-4)			
List of Old/ Existing Built-Up Areas/ Congested Areas/ Settlement/ Gram Khantam/ Abadi			
Sl.No.	**Ward No.**	**Block No.**	**Name of the Lociality / Area**
1	**2**	**3**	**4**
1	3, 4part, 5, 6, 7	2 Part, 3, 4 part, 5 part	Bhavanarayana Swamypet, R & B Bungalow road area, MRO office area, Mollavari Street area, A.S.M. College area, Erukalawada Slum area, Duffpet, Vegetable Market area, Back side of Z.P.H. School area, Lakshmi Theatre area, Tungabadra Bund, Aluru road.
2	8, 9, 10, 11, 12	5 part, 6, 7, 8, 9 part, 10 part	Northern side of Repalle road from Over Bridge to Ambedkar Nagar i.e Railpet, Gowdapalem, Nagula Cheruvi area, Cabinpet, Back side of Peddanna Tank area, Kalpana Building area, Kondamudi road, Karanamgari Street area, Ambedkar Nagar (Jaya Bharat Reddy Nag
3	13, 14, 15	10 Part, 11, 12, 13	Southern side of Repalle road from Over Bridge to Jadavalli Irrigation Channel i.e Malapalle Vaddimukkala road, Rajakapet, Rice Mill road area, Old Tank Bazar Mahatma Poole road, P.B.N. college roadarea, Sanjay Nagar colony , D.R.K. colony.
4	16, 17	14 Part	Back side of Ansari Theatre area, Kalavakatta area, Nethaji Nagar (P)
5	19, 20, 21, 22, 2 3, 24, 25, 26, 4 part	15, 16, 17, 18, 19, 20, 21	Weavers colony L.P.No. 338/85, Santhi Nagar, Yandi Colony, E.B. Hospital area, Islampet, Mubarak Nagar, Indira Colony, Ambedkar Colony Harijanawada, Old Ponnur, K.K. road , Mangalipalem, Gajulapalem, Burraah Tank, Itikampadu road (South), Weavers Colony, S
6	27, 28, 29, 30, 31	22 Part, 23 Part, 24 Part, 5 Part	Itikampadu road (North), Muslim area, Tukaram Rice Mill area, Sharaff Bazar, Brahmin Bazar, Telagapalem, Ring road, Sri Rangapuram Channel Bund.
	IB:- All Notified and Non-Notified Slum areas and E.W.S. Housing Colonies		
	I.C :- In case of existing areas not covered in above 1A & 1B and sites not covered in road widening buildings approvals in interstitial sites may be considered by the sanctioning authority with reasons to be recorded in Writing and with the height restr		
	ID :- In all the above areas where the road width is 30 feet / 9 Mts., and more, those areas may be considered for construction of buildings as allowed in "Sites in New Areas / Approved Layouts areas " Except High Rise Buildings.		

ANNEXURE-II (See Rule-4)			
List of Areas Prohibited for High Rise Buildings			
Sl. No	**Ward No.**	**Block No.**	**Name of the Locality / Area**
1	**2**	**3**	**4**
High Rise buildings are Prohibited in areas mentioned in Annexure - I where the road width is less than 60'-0" / 18 Mts.			

REPALLE MUNICIPALITY

ANNEXURE-I
(See Rule-4)

List of Old/ Existing Built-Up Areas/ Congested Areas/ Settlement/ Gram Khantam/ Abadi

Sl.No.	Ward No.	Block No.	Name of the Lociality / Area
1	2	3	4
1	1	1 & 2	Yadavapuram, Muslim area, ST Colony, 1st ward layout
2	2	27 & 28	Harijanawada, Gurivaripalem, Guntur Malapalli
3	3	24, 25 and 26 (P)	Aravapalli road, Lakkarajuvari Street, Jandyala Vari Street, Pakala Vari Street
4	4	21 and 22	Rajakapet, Bandi Cheruvu, Salipet
5	5	19 and 20	West Harijanawada, Bandicheruvu, Gamidi Vari street
6	6	17 and 18 P)	Prakasam road, Marker area
7	7	18 (P)	Sonti Vari Street
8	8	17	Scavengers Colony, Douti Vari Street
9	9	15 and 16	Prakasam road, both side of Rajesh Theatre
10	10	15	Back side of Rajesh Theatre, R.S.No.227, Nadendla Vari Street
11	11	13 and 14	Repalle Nizampatnam road, Meka vari Street, Paruchuri Vari Street, Sistla Vari Street
12	12	13 (P) 35	Housing Board Colony, Bose road, Park Street, Thumala Vari Street
13	13	13 (P) 35	Yerukala Colony, Yanadi Colony, Vaddara Colony
14	14	12	Nizampatnam road, Uppudi road, Kanagala vari street, Vaddara colony
15	15	35 and 15	Naka Vari Tank, Lowa Girls High School, Weavers Colony, FCI Gowans, Malapalli
16	16	34 and 33	Isukapalli, Yadavapalem, Nizampatnam, Kodali vari Street
17	17	31 and 34	Bethapudi road, Nizampatnam, Komuri Vari Street, Thadiparthi Vari Street
18	18	32	Neera Society road, Avaru Vari Street, Arundathi Nagar
19	19	10 (P)	Isukapalli Port, Bethapudi donka road, Mandava Narayan Street, Velagapudi vari street
20	20	10 (P)	Bethapudi donka slum, Teachers colony, Durga Rice Mill area
21	21	10 (P)	Massed area, Bethapudi donka, Maigapalli
22	22	39	ABR college, Lambadi Colony, Railway Colony, Teja Nagar, Indian Bank
23	23	29	Lambadi colony, Indira Nagar, Yanadhi colony
24	24	29	Nethaji Nagar
25	25	8 and 9	Ramakotipeta, Gramadevatha road, Repalle - Guntur road
26	26	6 and 7	Tamalapakula Vari Street, Mahamadeula Vari Street, Burgallam Temple and Islam Shaniff street
27	27	5 and 6	Gramadevatha road, Bondula Doddi Street, Rangachari Street
28	28	3 and 4	Repalle - Guntur road, Yadavala Vari Street, Vadlabathula vari Street, Pinapala vari street

ANNEXURE-II
(See Rule-4)

List of Areas Prohibited for High Rise Buildings

Sl. No	Ward No.	Block No.	Name of the Locality / Area
1	2	3	4
High Rise buildings are Prohibited in areas mentioned in Annexure - I where the road width is less than 60'-0" / 18 Mts., .			

SATTENAPALLI MUNICIPALITY

ANNEXURE-I
(See Rule-4)

List of Old/ Existing Built-Up Areas/ Congested Areas/ Settlement/ Gram Khantam/ Abadi

Sl.No.	Ward No.	Block No.	Name of the Lociality / Area
1	2	3	4
1	4	1	Vavilal Nagar, Bhavana Rushi Nagar, Phanidam Society area, Postal Colony, Railpet, Railway Station Opp. Area, FCI, CWC, Ashok Nagar, FCI workers colony, Yandi Colony, Lenin Nagar
2	2	2	Railway Quarters road, Venkateswara Swamy Temple area
3	2	3	Old Sugali Colony, New Sugali Colony, Station area, Mastin Pet, NGO colony
4	2	4	Rallabandi Vari Street, Puttavari Street, Brahmana Street, SBI Back side road, Phiroj Mandir area, Nadigama Donka
5	1	5	Ambedkar road, Nagarjuna Nagr, Buddudu Statue road, Kandimalla Veeraraghavaiah road, Venugopala Nagar, N.S. Kenal Quarters

6	1	6	Christianpet
7	2	7	Sangamgudi Street, Jandachettu Street
8	1	8	Challavari Street, Koppuravuru Vari Street, Hedge Vari Street
9	8	9	Supply Chanal road, Kasireddy Vari Street, Kerala School road, Vaddavalli donka road
10	9	10	Chakkavanthena road, Kambala Vari Street, Mpl. Park area, Ramalayam back side road, Sriram Nagar
11	9	11	Boya Batrajula colony, Ragavendra Balakuteer area, Veerajaneya Nagar, N.S. Canal Bund area
12	11	12	Sastri Nagar, Chenchu colony
13	11	13	Paludevarlapadu donka rd, Kanumuri vari street, Muslim area, Salivahana Nagar,Gachubaviarea, Thurpu Bazar area
14	11	14	Paludevarlapadu donka road, Rajaka Street, Nallagatla Vari Street, Jenda chettu street, Yelinedi vari street
15	9	15	Bandla Bazar, Kothavari Street, Janakamma Sathram Bazar, Jakkula Vari Street, Thurpu bazar, Pasupuleti vari st.
16	10	16	Erukupalem Donka road, Bhavana Rushi Temple street, Thummala vari street, Medara Vari Street, Sirigirivari street, Thota Manikyam street, Mavuri vari street, Janda Chettu street, Avvari Vari Street, Venkata Rao street, Thota Janaka Ramaiah Street, Papiset
17	6	17	Edduladoddi vari street, Annam vari street, Ammavari Temple back side street, old Salipet.
18	2	18	Gundepudi vari street, Vavilala vari street, Sangham Temple street, Sadhuvamma hostel area, Maharashtravari Veedhi, Palnadu vari veedhi, Bandla Bazar, Pakalapati vari street, Sivalayam stright street.
19	10	19	Bhavan Rushi Temple Street, Ramanjaneya Street, Nagannakunta area, Kabela road, Thullurivari Street
20	5	20	Venkatapathi Colony, Bibi Nagar, Yanadi Colony, Ammisetty Vari Street, Gudipudi Vari Street, Venugopala Swamy temple back side area.
21	3	21	capala Sattar Bazar, Sivalayam back side road, Peerla chavidi Street, Rayuduvari street
22	3	22	Kankanalapalli donka road, Peerla Chavidi area, Poleramma Temple area, Old Muslimpet area
23	4	23	Kankanalapalli donka road, Masid road, Azad vari street, Akbar vari Street, Kambala Bhavi Street, Mahaboob Nagar area, Nirmala Nagar area

ANNEXURE-II
(See Rule-4)

List of Areas Prohibited for High Rise Buildings

Sl. No	Ward No.	Block No.	Name of the Locality / Area
1	**2**	**3**	**4**
1	4	1	Atchampet road, Ambedka Nagar, Brundavan Gardin, Abburu road, Bhimavaram donka road, chebrolu Hanumaiah Colony
2	2	2	Atchampet road, Railway Station road, T.T.D. Kalyana Mandapam beside road
3	2	3	Railway Station road, Bhimavaram donka road
4	2	4	Railway Station road, Nandigama Donka road, Bhimavaram dona road.
5	1	5	Nadigama donka road, Guntur - Macherla road, Industrial Estate area, Vasavi Nagar
6	1	6	Guntur - Macherla road, DSP office road, Nandigama Donka road, Christian pet main road
7	2	7	Railway Station road, Nandigama donka road
8	1	8	Bhavirisetty Vari street, Supply chanal road, Gollamudi Vari Street, Railway Station road, S.B.I. road, Police quarters road, Nandigamas donka road, Guntur - Macherla road
9	8	9	Guntur to Macherla road, Byepass road, Kattamuri Vari Street, Market road, Srinivasamahal road, Nomulavari Street, Viyaja Bank road, P.R. Office road, Guravaiah Vari Street, Akkireddy Vari Street, Old Post Office road
10	9	10	Byepass road, Vetarnary Hospital road
11	9	11	Guntur to Macherla road, Raghuram Nagar Road (via) Rayala Venkatarao Hospital road, C.T.O. office, Raghuram Nagar, Byepass road, Industrial area.
12	11	12	Anjaneya Swamy Temple Street, Veera Ragha Swamy Temple Street, Garlapadu road
13	11	13	Garlapadu road, Chava Narasimha Rao House road
14	11	14	Anjaneya Swamy Temple Street, Garlapadu road,

			Mahalakshmamma chettu area
15	9	15	Poleramma Temple Street, Anjaneya Swamy Temple Street, Market to Vetarnary Hospital road, Pasupuleti Vari Bhavi Street
16	10	16	Municipal office road, Poleramma temple street
17	6	17	Guntur - Macherla road, Kattamuri vari Street, Venugopalaswamy temple street, Municipal office road
18	2	18	Guntur - Macherla road, Bhavisetty vari Street, Atchampet road, Suryatakies area, Dhobi Ghat area, Tank Bund area.
19	10	19	Municipal office road, Nagannakunta main road
20	5	20	Guntur Macherla road, Narasaraopet road, Shadikhana road, Venugopala Swamy temple street, Nagannakunta main road
21	3	21	Atchampet road, Guntur - Macherla road, Poleramma Temple Street (Part)
22	3	22	Poleramma temple Street (Part), Guntur - Macherla road, Edga road, Compost Yard road
23	4	23	Atchampet road

VINUKONDA MUNICIPALITY

ANNEXURE-I
(See Rule-4)

List of Old/ Existing Built-Up Areas/ Congested Areas/ Settlement/ Gram Khantam/ Abadi

Sl.No.	Ward No.	Block No.	Name of the Lociality / Area
1	2	3	4
1	3	29-1674 to 29-1939	NSP Colony
2	4	29-350 to 29408	Church Bazar
3	4	29-409 to 29-447	Balamma Bazar
4	4	29-1457 to 29-1673	Vidya Nagar
5	5	29-1004 to 29-1456	Rafuddin Lodge to Kothpeta, Geethanjali School Opp.
6	6	29-1 to 29-138	RTC Quarters to Suresh Mahal Road and Gas Saleem line
7	6	29-779 to 29-829	MDO Chandraiah line
8	6	29-829/1 to 29-928	Bank Khasim line
9	6	29-929 to 29-1003	Tallipilla Hospital line
10	7	29-139 to 29-156	Gas Saleem Bazar
11	7	29-157 to 29-194	DE Narasimha Rao line
12	7	29-195 to 29-232	Petrol Bunk Subbarao line to Suresh Mahal
13	7	29-448 to 29-508	Balamma Bazar
14	7	29-509 to 29-551	Contract Ismail Bazar
15	7	29-552 to 29-644	Ramalayam Bazar
16	7	29-645 to 29-775	Ramana Reddy Bazar
17	7	29-756 to 29-778	MDO Chandraiah line
18	8	27-1 to 27-307	VinneDepartment store to Musala Reddy Hospital Opp. Lane (Lawyer street)
19	8	28-1 to 28-160	Musala Reddy Hospital Opp. Line to Vinne Department store (Lawyer street)
20	8	28-161 to 28-207	Govt. Hospital Opp. Line
21	9	30-291 to 30-423	Virat Complex back
22	9	30-480 to 30-518	Andhra Bank area
23	11	31-614 to 31-726	Ankalammapeta
24	11	31-799 to 31-949	Mahatma Gandhi Complex back side area (Srungaravanam)
25	11	31-992 to 31-1181	Mahalakshmamma Chetu area & Chruch bazar
26	12	4-70 to 4-163	Pattimeda Bazar
27	14	11-281 to 11-390	Pedanalsa Bazar
28	14	12-1 to 12-118	Anjaneya Swami Bazar
29	14	13-1 to 13-96	Anjaneya Swami Bazar
30	14	14-1 to 14-147	Kondametla Bazar
31	15	8-1 to 8-89	Dakshnam Bazar
32	15	9-1 to 9-72	Dakshnam Bazar
33	15	10-1 to 10-88	Pappu Bazar
34	16	4-218 to 4-267	Kummari Bazar

35	16	4-271 to 4-377	Kummari Bazar
36	16	4-381 to 4-387	Kummari Bazar
37	16	5-1 to 5-193	Ranahusen Bazar
38	16	6-1 to 6-140	Ranahusen Bazar
39	16	24-263 to 24-294/1	Garrevari Street
40	17	1-1 to 1-108	Old Library Bazar
41	17	2-148 to 2-198	Old Library Bazar
42	17	3-1 to 3-335	Kummari Bazar
43	17	4-1 to 4-69	Kummari Bazar
44	17	4-124 to 4-165	Patimeda Bazar
45	18	25-89 to 25-142	Main Bazar
46	18	25-143 to 25-198/1	Poleramma Gudi Bazar
47	18	26-1 to 26-42	Main Bazar
48	18	26-43 to 26-100	Fancy centre
49	18	26-101 to 26-156	Main Bazar
50	18	24-62 to 24-65/1	Govt. Hospital back side
51	18	24-66 to 24-96	Sattu Bazar
52	18	24-97 to 24-153	Old Market Bazar
53	18	24-154 to 24-198	Chithirala Sathyam Bazar
54	18	1-109 to 1-136	Subbamma Tiki
55	19	25-24 to 25-88/8	Main Bazar
56	19	24-198/1 to 24-216/2	Main Bazar
57	19	24-217 to 24-262	Garrevari Street
58	19	20-141 to 20-151	Pedamasid Bazar
59	19	21-103 to 21-168	Pattavari Street
60	19	21-169 to 21-206	Pedamasid Bazar
61	19	21-207 to 21-214	Old Market Bazar
62	19	22-1 to 22-24	Old Market Bazar
63	19	22-25 to 22-48	Sattu Bazar
64	19	15-1 to 15-178	Post Office Bazar
65	19	16-1 to 16-29	Post Office Bazar
66	20	16-30 to 16-139	Kondmetla Bazar
67	20	17-1 to 17-46	Kotnalsa Bazar
68	20	17-132 to 17-207	Medara Bazar
69	20	18-1 to 18-123	Gunti Anjaneya Swami Bazar
70	20	18-151 to 18-184	Gunti Anjaneya Swami Bazar
71	21	19-16 to 19-36	Medara Bazar
72	21	19-186 to 19-238	Masid Bazar
73	21	20-1 to 20-140	Masid Bazar
74	21	21-1 to 21-40	Masid Bazar
75	21	21-41 to 21-102	Kundhirithi Bazar
76	21	22-49 to 22-78	Sattu Bazar
77	22	22-79 to 22-130	Sattu Bazar
78	23	19-166 to 19-185	Masid Bazar
79	23	19-239 to 19-286	Christian Palem back side
80	23	23-361 to 23-469	Sweepers Colony
81	24	17-47 to 17-131	Dabba Stambam Center
82	24	18-114 to 18-150	Dabba Stambam Center
83	24	18-185 to 18-200	Dabba Stambam Center
84	24	18-201 to 18-253	Chakalivari Street
85	24	18-254 to 18-277	Dabba Stambam Center
86	24	19-1 to 19-15	Dabba Stambam Center
87	24	19-37 to 19-89	Dabba Stambam Center
88	24	19-852 to 19-858	NTR Colony

ANNEXURE-II (See Rule-4)			
List of Areas Prohibited for High Rise Buildings			
Sl. No	**Ward No.**	**Block No.**	**Name of the Locality / Area**
1	**2**	**3**	**4**
1	1	29-2093 to 29-2156/2	Old LIC Building & Gas Godown area
2	1	29-2560/1 to 29-2560/29	Vennapusa Colony
3	1	29-2576 to 29-2605	Dharmapuri Colony to Hema Dairy
4	3	30-1 to 3-37	Railway Station road
5	4	29-233 to 29-349	Suresh Mahal road
6	8	28-208 to 28-61/A	NRT road & MRO compound
7	9	30-38 to 30-286	ABM Compound & Station road
8	9	30-286/1 to 30-290	NRT road
9	9	30-424 to 30-479	NRT road
10	9	30-519 to 30-569	NRT road
11	9	30-570 to 30-603	Markapur road
12	9	30-604 to 30-727	Enugupalem road
13	11	31-579 to 31-613	Enugupalem road
14	11	31-727 to 31-798	Enugupalem road to Mahatma Gandhi Complex
15	11	31-950 to 31-991	Markapur road
16	11	31-1182 to 31-1309	Markapur road Check post area
17	18	26-157 to 26-216	Markapur road
18	18	26-219 to 26-305	Sivaiah Stupam road
19	18	24-1 to 24-37	Sivaiah Stupam road
20	18	2-1 to 2-147	Markapur road
21	23	23-470 to 23-566	Karampudi road
22	23	23-566/1 to 23-603	Vellatur road
23	24	19-552 to 19-594	Vellatur road

COVERED BY THE URBAN DEVELOPMENT AUTHORITY			
ANNEXURE-I (See Rule-4)			
List of Old/ Existing Built-Up Areas/ Congested Areas/ Settlement/ Gram Khantam/ Abadi			
Sl.No.	**Ward No.**	**Block No.**	**Name of the Lociality / Area**
1	**2**	**3**	**4**
	Guntur Municipal Corporation		
1	3, 4, 5, 7, 8, 9, 10, 13, 14, 15, 11, 18, 19, 20, 21 & 22		As per G.O.Ms.No. 678, dated 7.9.2007 of M.A. & U.D., Department the Ward Nos. of Guntur Municipal Corporation are notified and remaining Tenali and Mangalagiri Wards not mentioned and newly constituted Tadepalli on 2009. Regarding Vijayawada Municipal Corporation is not included as per Annexure - IV as the Corporation goes to Rajamandary Region and Extract of above G.O. is herewith enclosed
	Tenali Municipality		
	Mangalagiri Municipality		
	Tadepalli Municipality		
1	1, 22, 23	12	Mahanadu
2	3	12	Christainpet
3	5	4	Anjireddy Colony
4	6	6	Vinayaka Temple colony, Vaddera Colony Area between Tadepalli Main Road & Raiway Track
5	7	14	Prakash Nagar excluding 100' belt abutting old NH5 and excluding the carmarked zone of Commercial & Industrial Area
6	8	15	Brahmananda Puram, Rakistan, MH Colony
7	9, 10, 11, 12	14	Dolas Nagar, Prabhu Nagar, Prakash Nagar, Krishna Nagar, Islampet, Drivers Colony, Nulakapet, Babujagajjevarao colony, Rajeev Colony, Industrial Press Workers colony of all Hill slop areas excluding 100' belt abutting told NH5 and carmarked zone of commer
8	13	14, 5	Nulakapet, RMS Colony
9	14	5, 11	Lambadipet, Muggu Road, and Hill slop of Polakampadu Hill Excluding 100' belt abutting old NH5
10	15, 16, 17	1, 2, 7, 8, 9, 10	Railway Quartes area, Police Station Area, Malalakshmamma tree area, Ramalayam Area, Bhavana Rushi Temple area, Rajakapet, Ganganamma Temple Area, Sivalayam Area, Kothuru Ramalayam Area, Hill Slope Area
11	18	11	ESI Hospital area, Polakampadu excluding 100' belt abutting old NH5
12	19, 20	13	KL Rao Colony, Hill Slopeof Seetha Nagaram,
13	21	13	Settlement Colony
Note:- The sites abutting to the roads having width of 9.00m and above in the above listed areas and also proposed Master Plan roads are exempted			

ADDANKI NAGAR PANCHAYAT			
ANNEXURE-I (See Rule-4)			
List of Old/ Existing Built-Up Areas/ Congested Areas/ Settlement/ Gram Khantam/ Abadi			
Sl.No.	Ward No.	Block No.	Name of the Lociality / Area
1	2	3	4
1		1	Nil
2		2	NRT road, Dudekula Palem, Renamgivaram road, near Brahman Gari Temple, Moula Nagar, Kakanipalem
3		3	North side of Renamgivaram road, Yadavula Bazar, East side of Kakanipalem Tank
4		4	Kakanipalem Tank road
5		5	Ranamgivaram Road, Mandapam surrounding
6		6	NRT road at Vinayakaswamy Temple, Parandhamaiah bunk at Ongole road, Opp. Road of Mandapam, Bhavani Centre
7		7	Mattupalli Petrol Bunk, Vijaya Lakshmi Theatre, Chakali Palem, Old Namburivari Palem , Mellempudivari Bazar
8		8	Behind Mattupalli Petrol Bunk, Namburivari Palem
9		9	Dr. Gopala Rao Street, Sanjeeva Nagar, Potti Sreeramulu Statue surroundings
10		10	Dr. Gopala Rao Street, Beside Police Station bazar
11		11	Dr. Gopalarao Street, Kuricheti Rice Mill
12		12	From Meera Bunk to (Via Bos Centre) Govt. Hospital
13		13	East side of Sanjeeva Nagar to NRT road, Pothurajugandi to Bhavani Centre up to Govt. Hospital road
14		14	Bhavani Centre, Govt. Hospital area, Bhagya nagar, Behind Bhavani Theatre
15		15	Beside of Govt. Hospital, Lingaiah Rice Mill surrounding Islampeta, Indira Nagar Gadda
16		16	1000 Pillars Tempel area, Kalavakuru road, Opposite NRT Statue, Old Damavari Palem, NRT road, Darsi road
17		17	Nil
18		18	Old Damavari Palem, Cheruvu Baavi surroundings
19		19	Darsi Road, Narasimha Swamy Temple road, Rudraiah Petrol Bunk, Mujavari Plame, Challavari Street
20		20	Battulavari Palem, Perika Palem, East Banda Palem
21		21	East side of Perika Palem, Kadiyam Palem
22		22	Kattakrida Palem, Sivalayam Temple Street
23		23	Indira Nagar, Poleramma Temple surroundings, behind Govt. Hospital, behind Old MRO office.
24		24	Old Darsi road, Gandhi Statue centre, gunjivari palem
25		25	Gandhi Bomma Centre, Behind Madhavaswamy Temple
26		26	Old Darsi road, Gunjivari Palem
27		27	Opposite Madhava Swamy Temple, Sri Datta Sai Temple Street, Chamarthivari Bazar, Chilakavari Bazar, Attulurivari Bazar
28		28	Andhra Bank lane, opposite Madhava Swamy Temple, Attulurivari Bazar, Peda Ganuga Palem, Behind Andhra Bank
29		29	Co-operative Bank lane, Peda Ganuga Palem, Jr. College Bungalow road
30		30	Old Bus Stand, Bungalow road, Kalamandir Theatre
31		31	Behind Bus Stand, Abhyudaya Nagar, Sate Bank Lane, Oil Mill road, LEF Nagar, Santhi Nagar
32		32	State Bank Colony, Vasavi Nagar
33		33	Rama Nagar, Behind Market Yard
34		34	NSP Colony, right side of Jr. College
35			Nil
36			Balaji Palem, Old Pasumarhti Palem, Rajaka Colony, Kolimi Thopu
37			Gajula Palem, Balaji Palem
38			Gorlamitta, Bodempudivari Bazar, Mondithoka Palem
39			China Ganuga Palem, Saibaba Temple surroundings, Rajaka Palem, Kummaripalem
40			Bangaramma Chettu, Maramvari Street, Mattupallivari Street, Allamvari Bazar, Marripudivari Bazar, Behind Sai Baba Temple
41			Gorlamitta, Morasavari Bazar, Kattavari Bazar, Kollivari bazar
42			Narravari Palem

ANNEXURE-II (See Rule-4)			
List of Areas Prohibited for High Rise Buildings			
Sl. No	**Ward No.**	**Block No.**	**Name of the Locality / Area**
1	**2**	**3**	**4**
List of areas in Annexure - I, except the sites abutting 60'-0" road, other areas except the sites abutting 60'-0" wide road			

CHIMAKURTHY NAGAR PANCHAYAT			
ANNEXURE-I (See Rule-4)			
List of Old/ Existing Built-Up Areas/ Congested Areas/ Settlement/ Gram Khantam/ Abadi			
Sl.No.	**Ward No.**	**Block No.**	**Name of the Lociality / Area**
1	**2**	**3**	**4**
1	1	1	ZPTC Street, Karanam Gari Street, Old Navabpeta, Brahmam Gari Matam Street, Vasavi Apartment road, Bangaramma Thopu area, Garika Mitta area, Sidda Nagar area, NTR Nagar area/ Sai Nagar Area, Himagi Colony, Ganga Nagar
2	2	2	New & Old NSP Colony area, YSR Nagar, Old Managali Palem, Islam peta, Anjaneya Swami Kunta area, Back side of RTC Bustanad area, Dinne Puram Navab peta,
3	3	3	Dinne Puram area, Vadde Palem road, Old Kummari Palem, New Kummari Palem
4	4	4	Kotha Peta Bazar, Ram Nagar
5	5	5	Kota Katla Vari Street, Back side of Vekateswara Diyeter area
6	6	6	Pallapothu Vari Street, Back side of MPP Elementary School, Vidya Nagar
7	7	7	Tatikonda Ademma Gari Street, Sayani Vari Street, back side of Archana Hotal area, Potti Srimamula Nagar, Potti Sriramula Nagar, Pidthalapudi road, back side of Andhra Bank area, Venkateswara Nagar area, Gandhi Nagar 1-9 liens, Ram Rajiv Nagar
8	8	8	Surya Nagar, Nehru Nagar, Weavers Colony China Rasta area
9	9	9	Thopu Bazar, Matan Market area, Ginnela Swami Street, Pokuri Vari Street, Mantralu Street
10	10	10	Annamma Street, Sidda Vari Street, Seelam Vari Street / Maddi Vari Street
11	11	11	Reddy Gari Stteet / Old Police Station area
12	12	12	Gattu Palli Vari Street, Darsi road, Ratcha Mitta Center
13	13	13	Christian Palem, Ambedkar Nagar
14	14	14	Kanchu Kota Bazar, Thurpu Bazar, Reddy Gari Street, Muppuri Vari Bazar
15	15	15	Ambedkar Nagar Part, Thurpu Bazar part, Mannam Venkaiah Gari Bazar
16	16	16	Patimeda Palem

ANNEXURE-II (See Rule-4)			
List of Areas Prohibited for High Rise Buildings			
Sl. No	**Ward No.**	**Block No.**	**Name of the Locality / Area**
1	**2**	**3**	**4**
1	1, 2, 3, 4, 5, , 67, 8, 9, 10, 11, 12	1, 2, 3, 4, 5, , 67, 8, 9, 10, 11, 12	Kurnool road South side & North side
2	4, 5	4, 5	Muvva Vari Palem Donka road
3	3, 4	3, 4	Muvva Vari Palem donka road to Kotha Kummari Palem
4	1, 15	1, 15	Ratcha Mitta Centre to Patimeda Palem
5	6, 7	6, 7	Gonugunta road - From MRO Office to Polimera

CHIRALA MUNICIPALITY			
ANNEXURE-I (See Rule-4)			
List of Old/ Existing Built-Up Areas/ Congested Areas/ Settlement/ Gram Khantam/ Abadi			
Sl.No.	**Ward No.**	**Block No.**	**Name of the Lociality / Area**
1	**2**	**3**	**4**
1	15	15, 16	Besthapalem area, MGM area and Veera Raghavapet
2	14	14, 13P	Muthyalapet, Naaz Theatre areas
3	13	13P	Annadatavari Street area, Gollapalem Perala area
4	6	11	Karanamgari Street area, Avvaruvari Street area and Muttevari Street area, Perala
5	'12P	19P, 20P	Chekka Kotla Bazar, Vasudeva Vilas areas
	Collection Wards effected 11, 13, 14, 15, 16, 19P & 20P wards		

ANNEXURE-II (See Rule-4)			
List of Areas Prohibited for High Rise Buildings			
Sl. No	**Ward No.**	**Block No.**	**Name of the Locality / Area**
1	**2**	**3**	**4**
Height of all types of buildings restricted up to 18.00 Mts., (excluding parking floors) and all areas and localities mentioned in Annexure - I except for the plots abutting to 18.00 Mts., and above			

GIDDALUR NAGAR PANCHAYAT			
ANNEXURE-I (See Rule-4)			
List of Old/ Existing Built-Up Areas/ Congested Areas/ Settlement/ Gram Khantam/ Abadi			
Sl.No.	Ward No.	Block No.	Name of the Lociality / Area
1	2	3	4
1	1		SPG Mission, Gandhi Road, Chinna Maseed Centre, Britten Street, Z.P.High School, Nataraj Bazaar, College Road, Harijanapalem
2	2		Kummarakatta, Kotagadda veedhi, Nataraj Bazaar, Sarma Bazaar, Old Badvel Road, Ankamma Bazaar,
3	3		Jatharakatta Veedhi, Ramalayam Temple, Old Badvel Road, Market Centre, Pedda Bazaar Centre, Kummara veedhi,
4	4		Gaddamvari Bazaar, Railway Station Road, Vysya Bank, Pedda Bazaar, Yellavari Veedhi,
5	5		Rajasthan Hotel Centre, Chakali Street, Kongalaveedu Road to Brahmamgari Matam, Chinna Maseed Centre
6	6		Club Road, Yadava Bazaar, Koppuvari Veedhi, Aggipettala Bazaar, Sunkamma Street
7	7		Yadava Bazaar, Garrevari Veedhi, Prasanth Nagar, Potti Sreeramulu veedhi, ABM Palem
8	8		Pamulapalle gate, Racharlagate Centre to Market Yard R & B Road, Ganesh Nagar, Veterinary Hospital, Forest Office, Club Road, Post office to Giddalur Public School, LIC Office, RTC Busstand, Narva Road, Hosanna Mandir, Kanakadurga mma Temple
9	9		Kothapalli Village, Pamulapalli Village
10	10		P.R.Colony, Vivekananda Colony, Modempalle Village, Chatrireddypalli Village Urban Colony, Kondapeta, Mittameedapalli Village

ANNEXURE-II (See Rule-4)			
List of Areas Prohibited for High Rise Buildings			
Sl. No	Ward No.	Block No.	Name of the Locality / Area
1	2	3	4
		8th Part	Komarolu Bus Stand Centre, Main Road, Racharla Gate, Nandyala-Ongole (R &B) Road
		2nd Part	Nandyal-Ongole R & B Road
		6th Part	Nandyal R &B Road side
	1B:		All Notified and Non-Notified Slum Areas and E.W.S.Housing Colonies.
	IC:		In case of existing areas not covered 1A & 1B and sites not covered in Road Widening Building Approvals in interstitials sites may be considered by the sanctioning authority with reason to be recorded din writing and the height restriction as mentioned.
	ID:		In all above areas where the Road width is 30 feet/9 mts. And more, those areas may be considered for construction of buildings as allowed in “SITES IN NEW AREAS/APPROVED LAYOYUT AREAS” except High Rise Buildings.

KANDUKUR MUNICIPALITY			
ANNEXURE-I (See Rule-4)			
List of Old/ Existing Built-Up Areas/ Congested Areas/ Settlement/ Gram Khantam/ Abadi			
Sl.No.	Ward No.	Block No.	Name of the Lociality / Area
1	2	3	4
1	1	24P	Yerragunta Palem and Surrounding Kostalu
2	2 & 3	24P, 22P	Janardhana Colony 4th class employees colony, Uppucheruvu, Mahaboob Nagar, Manuguntta Aadi Narayanareddy Nagar, Ekalavya Nagar
3	4	22P, 22P	Balaramayya Thota, Nandavari Street, Kanumallavari Street, Rama Nagar, Mothadu Palem, Nallamallavari Thota, New Sai Nagar, Janardhana Swami Temple area

4	5, 6 &7	21P, 11P, 1	Brundavanam, Vikkirala Peta road except both sides of main road, Kota Katta road, Santhosh Nagar, Lumbinivanam
5	8	2P	Kakumanivari Kostalu, Prakasam Colony, Revenue colony, Aadi Andhra Colony, Alavari Palem
6	9	3, 10P	Vankayalavari Palem, Kota Reddy Nagar Except both sides of main road
7	10, 11, 16, 17, 18, 21, 19, 20, 23, 22, 24, 25, 26 12	S.No. 865/1A1A2A1, 10P, 9P, 8P, 13P, 12P, 7P, 20P, 18P, 19P, 21P, 16P, 17P	Old Town area Grama Kantam , S.M. Nagar, Yerravaddi Palem, Khaji Palem, Padamati Salipalem, East Kamma Palem, Budida Palem, Old Bank Street, Kotha Peta, Pesmam Street, Est Vaddi Palem, Sali Bazar, Sivalayam Street, Gurramvari Palem, Kotha Kummari Palem, V
8	13, 14 15	7P, 6P, 13P	East Sali Palem, Sri Nagar Colony, Ankula Kunta Vaddi Palem, Yerragunta Harijana Palem, Mutharasi Palem, Pothuraju Mitta, Allavari Street
9	27	18P	Balija Palem, Chakali Palem, Yadava Palem
10	28	23P	Venkatadri palem, Cherlo Harijana Palem
11	29	24, 22P	Duba gunta Except both sides of main road, Nancharamma Colony, Komati Kunta
12	30	22, 24	Sai Nagar road No. 1 to road No. 6

ANNEXURE-II
(See Rule-4)

List of Areas Prohibited for High Rise Buildings

Sl. No	Ward No.	Block No.	Name of the Locality / Area
1	**2**	**3**	**4**
1	1	24P	Yerragunta Palem and Surrounding Kostalu
2	2 & 3	24P, 22P	Janardhana Colony 4th class employees colony, Uppucheruvu, Mahaboob Nagar, Manuguntta Aadi Narayanareddy Nagar, Ekalavya Nagar
3	4	22P, 22P	Balaramayya Thota, Nandavari Street, Kanumallavari Street, Rama Nagar, Mothadu Palem, Nallamallavari Thota, New Sai Nagar, Janardhana Swami Temple area
4	5, 6 &7	21P, 11P, 1	Brundavanam, Vikkirala Peta road except both sides of main road, Kota Katta road, Santhosh Nagar, Lumbinivanam
5	8	2P	Kakumanivari Kostalu, Prakasam Colony, Revenue colony, Aadi Andhra Colony, Alavari Palem
6	9	3, 10P	Vankayalavari Palem, Kota Reddy Nagar Except both sides of main road
7	10, 11, 16, 17, 18, 21, 19, 20, 23, 22, 24, 25, 26 12	S.No. 865/1A1A2A1, 10P, 9P, 8P, 13P, 12P, 7P, 20P, 18P, 19P, 21P, 16P, 17P	Old Town area Grama Kantam , S.M. Nagar, Yerravaddi Palem, Khaji Palem, Padamati Salipalem, East Kamma Palem, Budida Palem, Old Bank Street, Kotha Peta, Pesmam Street, Est Vaddi Palem, Sali Bazar, Sivalayam Street, Gurramvari Palem, Kotha Kummari Palem, Venkateswara Nagar, Simhadri Nagar, Gayathri Nagar, Prasanthi Nagar Colony, Kalidasuvari veedhi, Amalanadhunivari Palem, Except main road, Ganesh Nagar, West Mangali Palem, East Mangali Palem, Kesarigunta Colony, Kalluri Kotaiah Colony, Prasanthi Nagar, Ambedkar Nagar
8	13, 14 15	7P, 6P, 13P	East Sali Palem, Sri Nagar Colony, Ankula Kunta Vaddi Palem, Yerragunta Harijana Palem, Mutharasi Palem, Pothuraju Mitta, Allavari Street
9	27	18P	Balija Palem, Chakali Palem, Yadava Palem
10	28	23P	Venkatadri palem, Cherlo Harijana Palem
11	29	24, 22P	Duba gunta Except both sides of main road, Nancharamma Colony, Komati Kunta
12	30	22, 24	Sai Nagar road No. 1 to road No. 6

KANIGIRI NAGAR PANCHAYAT

ANNEXURE-I
(See Rule-4)

List of Old/ Existing Built-Up Areas/ Congested Areas/ Settlement/ Gram Khantam/ Abadi

Sl.No.	Ward No.	Block No.	Name of the Lociality / Area
1	2	3	4
1	1, 2	--	Pathuru, Mangalimanyam
2	3rd	--	MugguBavi Street, Boya Palem.
3	4	--	Talluri Kalyana Mandapam Street, Badulla Vari Veedi, Millu Bazar
4	5	--	Patha Kuchipudi palle, Kothuru , Reeta Bazar
5	7, 6	--	Kolimi Bazar, Chakali Palem, Ysr Street, Theegala Veedi
6	7, 8,	--	Naaj Centre Road from Boddu chavidi to Naaj Centre
		--	MSR Road-Ramalayam Street
	8	--	
7	9, 8	--	Andhra Bank Road, Jawaharlal Veedi, Subhash Road, Pragathi Street, Saibaba Temple Street, NAP Road , Parasara Bharathi Street, Guruswami Reddy Bazar, Kasireddy Bazar
8	8	--	Gajula Mastan Street, Polireddy Bazar, ICICI Bank Street
9	9	--	Karyadarsi Bazar, Siva Nagar Colony Roads, Devalayam Bazar, Duvvara palem, NGO Colony Roads, Appayya Street, Telephone Babu Bazar, Mandiram Bazar
10	10	--	Kotl Bazar from Nagarapanchayat office to Boddu Chavidi
11	11	--	Girls High School Road, Ankalamma Temple Street, post Office Road, IV Narayana Veedi , Addanki Vari veedi, Maseed Bazar, Shadikhana Bazar
12	1	--	Kasipuram
		--	Ele . School Road
13	2	--	Chenna Kesavulu Gudi Road
		--	Harijana Colony Road
14	1	--	Chinthalapalem
		--	Main Road
		--	Zp High School Road
15	2	--	Machavaram
		--	Temple Road
16	9	--	Sankavaram
			Urdu School Road
			Sai Baba Road
			Chakali Street
			Yadavula Bazar
			Redla Bazar

ANNEXURE-II
(See Rule-4)

List of Areas Prohibited for High Rise Buildings

Sl. No	Ward No.	Block No.	Name of the Locality / Area
1	2	3	4
1	1	--	Machavaram
			Main Road
2	2	--	Ongole Road
3	5	--	Pamur Road
4	8	--	Kandukur Road
5	7	--	Sankavaram Kothapalli , Main Road
6	8 , 7	--	Sankavaram Peerla Chavidi Road Main Road, Ramuluvari Gudi Street

IB:-

All Notified and Non-Notified Slum Areas and E.W.S Housing Colonies.

IC:-

In case of Existing areas not covered IA & IB and sites not covered in Road Widening. Building Approvals in interstitials sites may be considered by the sanctioning authority with reason to be recorded in writing and the height restriction as mentioned.

ID:-

In all above areas where the Road width is 30 feet/9Mts. And more, those areas may be considered for construction of buildings as allowed in " SITES IN NEW AREAS/APPROVED LAYOUT AREAS " Except High Rise Buildings.

MARKAPUR MUNICIPALITY

ANNEXURE-I
(See Rule-4)

List of Old/ Existing Built-Up Areas/ Congested Areas/ Settlement/ Gram Khantam/ Abadi

Sl.No.	Ward No.	Block No.	Name of the Lociality / Area
1	2	3	4
1	22, 23, 17 and 18 Parts	6th part & 7th part	Vadde Bazar, Gandhi Bazar, Peram Bazar and Opp. Municipal office road
2	6, 7 (P) and 5, 8 (P)	3rd part & 4th part	Aravindh Gosh road, Chakali Bazar, Amavari Shala Opp. Street, Dodlavari Bazar and Alugu to Arar
3	1st part, 4th, 5th part	4th part & 5th part	Eastern side gallies of Turpu Veedhi, Chenna Kesava Temple road, Koneru Bazar, Chenna Kesava Ramalayam Temple to Chenna Kesava Temple, Vijaya Lakshmi Veedhi and Radha Krishna Road Eastern side.
4	23rd, 24th, 25th, 26th, 27th and 28th parts, 30th part	10th part	Satyanarayana Swamy Temple road, Vijaya Talkies road between Jawahar Nagar main road, Nagulavaram road Gallies, Satyanarayana Swamy Temple to Vijaya Talkies road, Vivekanandha School road, Datha Sai Temple to Vijaya Talkies road, Market road, Nagulavaram
5	9th part	1st part	R.T.C Bus Stand backs side roads, Channel road, Dasara Mandapam Bazar, Mandapam Bazar, Thunicala Office area nera RTC Bustand R & B to Pula Subbaiah Veedhi

ANNEXURE-II
(See Rule-4)

List of Areas Prohibited for High Rise Buildings

Sl. No	Ward No.	Block No.	Name of the Locality / Area
1	2	3	4
1	30, 31, 32 Parts, 29, 24, 25 parts	10	Jawahar Nagar Colony Layouts roads, College road, Nagulavaram road & Santhic clinic hospital road
2	23, 20, 21, 22, 18, 17, 19	6, 7	Municipal Office road, Vijaya Talkies road, Sai Balaji Theater road, Loyola School road, Cumbum road and Kondepalli road
3	16, 15, 9, 10, 14, 11	1st	Socity Layout roads & Thota Vari Veedhi area, Current Office road , (Master Plan road) Tarlupadu main road from park to pulasubbaiah colony
4	13, 14	1st	Arunodhaya School road, APSEB colony layout roads, SBI colony layout roads and Harijana colony road
5	10, 11, 12	1, 2, 3, 4	Lakshmi Chenna Kesava Nagar Layout roads, Ongole road, from Court centre to Anjaneya Swamy Temple
6	4, 5, 6, 7	4, 5, 8, 11	Rajaji Steet from Park center to Radam Bazar, Naidu Veedhi from College roads to Radam Bazar, Turpuveedhi from Banagaramma Temple to College road

IB: - All Notified and Non -Notified slum areas and EWS Housing colonies

IC : In case of existing areas not covered IA & IB and sites not covered in road widneing, buildings approvals in interstial sites may be considered by the sanctioning authority with reasons to be recorded in writing and with the height restriction as mentioned.

ID : In all above areas where the Road width is 30 feet / 9Mts and more, those areas may be considered for construction of buildings as allowed in "SITES IN NEW AREAS / APPROVED LAYOUT AREAS" Except High Rise buildings.

ONGOLE MUNICIPALITY

ANNEXURE-I
(See Rule-4)

List of Old/ Existing Built-Up Areas/ Congested Areas/ Settlement/ Gram Khantam/ Abadi

Sl.No.	Ward No.	Block No.	Name of the Lociality / Area
1	2	3	4
	Division - 1		
1	34	6	Srirama Colony
2	35	6	Maruthi Nagar S.T. Colony
3	35	6	Andhra Kesari nagar
4	35	6	Revenue Colony
5	35	6	Maruthi Nagar
6	35	6	Sri Nagar Colony
7	36	6	Venkateswara Colony (Except main road, 30' and above roads)
8	36	2	Nehru Nagar
9	25, 26, 27	4	Chendraiah Nagar (Except main road)

10	27	5	NGO colony road except 30' road
11	26	4	Dibbala road (Except 30' road)
12	25	3	Balakrishna Puram
	Division -2		
13	1	1	Kesavaraju Kunta, Chinnamalleswara colony
14	1	1	Balineni Srinivasa Reddy Colony
15	1	1	Karanam Balaram Colony
16	1	1	Pungupati Nagar
17	1	2	Papa Colony
18	1	2	Bila Nagar
19	1	1	Karuna Colony
20	2	37	Ramannapeta, Islampeta Extension
21	3	37	Mahindranagar
22	3, 4, 5	39, 40	Gopal Nagar, (Except 60' road & Mini Byepass road and 40', 30' road)
23	4	38	Neelampalem
24	5	39	Tangilla Kasim Street
25	5	40, 41	Bollinenipalem
26	5	40	Kammapalem
27	5	42	Thurpu Kamma Palem (Except Karavadi Donka, Dasarajupalli donka, 30' and above roads)
28	6	43	Thurpu Christian palem
29	6	10	Indira Colony
30	7	11	Puli Venkata Reddy Colony Except 100' road
31	7	11	Rajiv Gruha Kalpa & Indiramma Phase - 3 houes (Except 30' road)
	Division -3		
32	10	57	Back side of Rambabu Hospital & Veternary Hospital
33	10	51	Kabadipalem (Except main road & Ananda rao road and 30' road)
34	12	50, 46, 47, 48, 49	Ranguthota (Except 30' road)
35	12	50, 46, 47, 48, 49	Pakeerpalem
36	12	49	Miriyalapalem (Except main road)
37	12	48	Chivukulavari Veedhi
38	12	46	Mashamsha Veedhi
39	7	56	Balaji Nagar, S.T. Colony, Pothuraju palem
40	7	56	Arava Colony
	Division - 4		
41	14, 15	29, 30, 28, 25, 26, 24	Gandhi road South
42	14	27	Gurramvari Veedhi
43	14	26	Venugopala Swamy Veedhi
44	14	26, 27	Kummarivari Palem
45	14	26, 27	Medarapalem
46	15	34	Ankammapalem
47	15	34	Eemanipalem
48	14	27	Chejarla Laxmanachari Veedhi
49	15, 19	35	Kesavaswamy Pet & Jakaraiah Hospital area
50	19, 20, 21	5	R.P. road 1 to 14 cross road
51	19, 30	2, 3, 4	Gaddalagunta (Except 30' and above roads)
52	15	24	Navvulurivari Veedhi
53	15	25	Addepallivari Veedhi
54	22	9	Gadiyaramvari Veedhi
55	22	6, 8	Godugupalem
56	19	35	Mamidipalem
57	19	35	Viswas Nagar & Kotha Mamidipalem
58	17	35	Vijayanagar Colony
59	19	35	Sanjay Gandhi Colony & CRP quarters
60	19	35	Seetharampuram & Seetharampuram extension
61	16	36	NGO colony
62	16	36	Dharavari Thota , NRT colony
	Division - 5		
63	13	32	Dandupalem
64	13	32	Aravapalem
65	13	19	Old Market area
66	13	21	Ganugupalem
67	13	18	Pathivari Veedhi
68	13	17	Kanyakaparameswara veedhi
69	13	15, 16	Bheemarajuvari Veedhi

70	13	14	Tyagaraju Mandir Veedhi
71	23	13	Ganta Palem
72	23	11, 10	Balajiraopet
73	23	12	Domalapalem
74	24	20	Mangalapalem
75	24	20	Vaddepalem
76	24	20, 19	Bandlamitta area (Except main road)
77	13, 14	23	Gandhi road (Except main road from Gandhi Statue to Court centre)
78	13, 14, 23	23	Gold Shops veedhi
79	24	20	Samakyatha Nagar
80	24	20	Ekalavy Nagar
81	24	20	Vantavari colony
82	32	6	Sivaprasad Colony
83	32	7	Gandhi Nagar
84	33	7	Sujatha Nagar (Pokice Quarters)
85	33	7	Soniya Gandhi Colony
86	33	7	Sunnapubattilla area

ANNEXURE-II (See Rule-4)			
List of Areas Prohibited for High Rise Buildings			
Sl. No	**Ward No.**	**Block No.**	**Name of the Locality / Area**
1	**2**	**3**	**4**
	Division - 1		
1	34	6	Srirama Colony, Main road
2	35	6	Police Ministrial Society approved layout
3	27	4	N.G.O's Venkateswara Colony & Srirama Colony main road
4	36	6	Venkateswara colony (South side of Mangamma college)
5	36	4	Gandhi Nagar (North side of Nehru nagar)
6	25	3	Dibbala road area
7	25	4	60' Sathyanarayanapuram area & 40' wide road from GNT road to Dibbala road
8	27, 28	4	NGO Colony road
9	26	4	Ramanarao Hospital surrounding side
10	35	6	Srinagar Colony 30' roads
11	35	6	State Bank Colony
12	35	6, 4, 5, 3	Kurnool road North side
13	25	3, 4	GNT road West side
	Division - 2		
14	1	2	Papa Rice Mill North side
15	1	2	GNT road East side
16	2	37, 1	Islampet main line & 30' and above roads
17	2	1	Islampet approved layout area (Opp. Srinivasa Theatre)
18	3, 4, 5	39, 40	Gopalanagar & Gopalanagar extension
19	5, 6	40, 41	Kammapalem extension
20	4, 5, 6	42	K.P. road North side
21	6	43	Railpet North side and West side
	Division - 3		
22	11	54, 55	Cloughpet
23	11, 12	53, 54	Bandar road, Ranguthota 30' roads
24	11, 12	51, 52	Ananda rao road
25	11	56	Gosh road
26	10, 11	54	Railpet
27	10, 11	57, 58	Santhapeta
28	10, 11	57, 58	Prakasam Bhavan South side to Municipal High School North area
29	9, 10, 11, 12		GNT road East side
30	11		Chennayyasetti road
31	8, 9		Ramnagar
32	8, 9		Annavarappadu
33	8, 9		Ramnagar South side up to municipal limits
	Division - 4		
34	18	11	Postal Colony
35	18	55	Bhagyanagar
36	18	37, 38, 39	N.S.P. Colony
37	15	34	Hospital road
38	16, 17, 18	37, 38, 39	GNT road West side
39	18	37, 38, 39	Bye pass road
40	18	36, 37	4th Class Employees colony
41	17	36, 37	IDSMT Layout
42	18	37, 38	Bank Colony (Mamidipalem)
43	19	26	Devudu Cheruvu Housing board colony
44	18	35, 36	Housing Board Colony
45	30, 31	19	Rajeev Nagar, Lawyerpeta Extension
46	31	19, 18, 16	Mangamuru donka south side to Kothadonka north side
47	31, 32	16, 18, 19	Z.P. colony, Hari Hara colony
48	31, 32	16, 18, 19	R.T.C. Colony
49	31	16, 18, 19, 20	Mangamurudonka South & North sides
50	29, 30	21, 22, 23	Lawyerpet
51	29, 30, 31	21, 22, 23	Lawyerpet Extension
52	28, 29	21, 22, 23	Uma Maheswara Nagar area
53	29, 30	21, 22, 23	VIP road
54	19, 20, 21	8	R.P. road main road
55	22	12, 11	R.P. road North side
	Division - 5		
56	14, 15, 16	34, 36, 37	GNT road West side

57	24, 27, 28	37, 38	Kurnool road South side
58	28	37, 38	Byepass road
59	28, 29	15, 16	Pandaripuram
60	28, 29	12, 13	Nirmalanagar
61	28, 29	15, 16	Brundavan Nagar
62	28, 29	18, 19	Brundavan Nagar
63	28, 29	18, 19	Ayyappa Swami Temple area
64	28, 29	18, 19	Mangamurudonka North side
65	32	16, 17	Iswarya Nagar
66	32	7	Chennakesavaswamy temple layout, Sambasiva Nagar
67	32	7	Gandhi Nagar North side, Sivaji Nagar
68	32	7	I.T.I. Employees colony
69	32	7	N.S.P. Canal West side
70	32	7	O.P.S. Public School North side

ANANTAPUR MUNICIPAL CORPORATION			
ANNEXURE-I (See Rule-4)			
List of Old/ Existing Built-Up Areas/ Congested Areas/ Settlement/ Gram Khantam/ Abadi			
Sl.No.	Ward No.	Block No.	Name of the Lociality / Area
1	2	3	4
1	16		Bheerappa street
2	19		Gadang street
3	20		Ammavari veedhi
4	21		Rajaji Street
5	23 & 24		Gandhi Bazar
6	23		Amudala street, Maldar street
7	24		Kayagurala street
8	25		Voodla Bandla street, Asar street, Nalband street
9	28		Boya veedhi
10			George pet:- 1st 2nd, 3rd, 4th &5th road new town, HLC colony
11	1		Dwaraka nagar, Somantah Nagar, R.K. Nagar, Janaki Ram nagar, Lectures colony
12	6		Maruthi nagar, Ram nagar, Lakshmi nagar, Kovur nagar, Janmabhoomi road, Ram agar Extention, Srinagar colony, Maruthi nagar Extension , Andhra Bank colony, Ballary road, Kalyandurg road, Seetha nagar, Kovur nagar extension, Mohammad nagar
13	7		Prakash road, Malleswari road, Court road
14	10		Admimurthy nagar, Sarojini road
15	11		Aravinda nagar,
16	12		Sai nagar, (Saptagiri to Rly gate, Aravinda nagar), Ashok nagar, Surya nagar, Central Excise colony, Ashok nagar Extension, Jesus nagar, Vidyut nagar Adarsh nagar, Cement godown area, Lakshminarasaiah colony, Sangamesh nagar
17	13		Kamala nagar, Revenue colony, R.C. Nagar
18	17		gooty road extension
19	18		Venugopal Nagar, Existing uma nagar,
20	28		New Housing board colony, APHB colony, RTO Office area, Sarada nagar, Vijayanagar colony , RDT office area, old SBI colony, Venkateswara Nagar
21	1		Indira nagar, Ganga nagar, Rajak nagar, Rangaswamy nagar, Sunitha nagar, Arunodaya colony, Yuvajana colony
22	4		Janashakti nagar, Hydervali colony, NTR Colony, New Indira Gandhi nagar,
23	6		Azad nagar, Lakshmi nagar, Mangalavari colony, Sangamitra nagar, Venkatra Rao nagar
24	7 & 8		Rahamath nagar, Gulzarpet
25	11		Naik nagar, Kurpananda nagar, Obuladeva nagar,
26	12		Ammavari Cheuru kottalu
27	13		M.G. colony, Chapala gunta , Venkataredy colony , Khaja nagar, Shiridi nagar, Srinivasa nagar
28	17 & 18		Neeruganti street
29	19		Rani nagar, Vinayaka nagar, Ferror colony, Rajamma colony, Bhavaninagar, Bindela colony
30	28		Buddappa nagar, Navodaya colony, Boya street, Ambedkar nagar, Munna nagar, Drivers colony
31	1		Ashok nagar
32	2		Rani nagar and (Ferror colony)
33	3		Buddappa nagar
34	4		Naik nagar
35	5		Yuvajana colony
36	6		Hamali colony
37	7		Venugopal nagar
38	8		Erukalavari colony
39	9		Vinayaka nagar
40	10		Ambedkar nagar
41	11		Rani nagar Harijanavada
42	12		Krupananda nagar
43	13		Neeruganti street-I
44	14		Neeruganti street-II
45	15		Tarakapuram
46	16		Tarimala Nagi reddy colony

47	17		Munna nagar
48	18		Rangaswamy nagar
49	19		Obuladeva nagar
50	20		Krishnadevaraya nagar
51	21		Nallapa reddy colony
52	22		Rani nagar CD Hospital
53	23		Lakshmi nagar
54	24		Maruthi nagar slum
55	25		Navodaya colony
56	26		Ammavari cheruvu kottalu
57	27		Roshanna nagar
58	28		Baba nagar (Rahamath nagar)
59	29		Sunitha nagar
60	30		Rajaka colony
61	31		Rajaka nagar
62	32		Indira Nagar
63	33		M.G. Colony
64	34		Mangalavari colony
65	35		Maruthi nagar railway track
66	36		Srinivasa nagar
67	37		Khaja nagar
68	38		N.T.R. colony (6th road)
69	39		Janashakti nagar
70	40		Azad naar (Nadimivanka)
71	41		Nehrupoormen colony
72	42		Hydervali colony
73	43		Kovur nagar Railway track
74	44		Hanuman colony
75	45		Satyadeva nagar
76	46		Besides Judicial colony
77	47		M.G.M. Colony
78	48		Mallalamma kottalu (Surya nagar)
79	49		Mahathma Gandhi colony – II
80	50		Sangamitra nagar
81	51		Sangamesh nagar
82	52		Vincent ferror nagar
83	53		Surya nagar (beside Hamali colony)
84	54		Krishna devaraya nagar (CPI colony)
85	55		Bhagya nagar
86	56		Nirmalananda nagar
87	57		Shiridi nagar
88	58		Bhavani nagar
89	59		VenkataREddy colony
90	60		DCMS Huts
91	61		Bindelavari colony
92	62		Ram nagar Railway track
93	63		R.V. Naidu colony
94	64		Narayana reddy colony
95	65		R.C. Nagar

ANNEXURE-II (See Rule-4)			
List of Areas Prohibited for High Rise Buildings			
Sl.No.	**Ward No.**	**Block No.**	**Name of the Lociality / Area**
1	**2**	**3**	**4**
1			All the areas as per Annexure-I
2			300m apart from the boundary of Nadimivanka, Maruva vanka etc
3			Area 500m apart from the existing boundary of the Musalamma Katta Cheruvu
4			Central Park area
5			100m apart from he flyover bridges at Subash road, Ramachandra nagar, N.H.7 etc.,
6			100m apart from Educational institutions
7			300m apart from HLC canal

DHARMAVRAM MUNICIPALITY			
ANNEXURE-I (See Rule-4)			
List of Old/ Existing Built-Up Areas/ Congested Areas/ Settlement/ Gram Khantam/ Abadi			
Sl.No.	**Ward No.**	**Block No.**	**Name of the Lociality / Area**
1	**2**	**3**	**4**
1	1		Chandra Babu Nagar Extension
2	2		Chandra Babu Nagar &sharada Nagar
3	3		Shanti Nagar
4	4		Shiva Nagar, Thikkaswamy kottalu & sankarapuram
5	5		Sanjay Nagar
6	6		Kesava Nagar
7	7		Geeta Nagar, Madhava nagar,
8	8		Gandhi Nagar
9	9		Chowdeswari Temple Street, Vara lakshmi theatre road, sridevi theatre road
10	10		Nagula bavi veedhi
11	11		Sale Market & Main Bazar
12	12		Jagjeevan Ram Nagar
13	13		Indira Nagar, P.R.T Street
14	14		P.R.T Street
15	15		Nill
16	16		Market street, Brahmin street
17	17		Boya street
18	18		Dharga street, Market street
19	19		Bade sab street, Masque area , Lingasetty palem
20	20		Lonikota
21	21		Brahmin street, Yadava veedhi
22	22		Yadava veedhi
23	23		Siddaiah gutta
24	24		Nehru Nagar, Siddaiah gutta
25	25		Parthasarathy nagar
26	26		Chennakesava puram , Priyanka Nagar
27	27		Durga Nagar I & II
28	28		Rajendra Nagar Extension
29	29		Rajendra Nagar
30	30		Kothapeta (Except R.S.Road)
31	31		KOthapeta only (opposite RLY STATION)
32	32		Guttakindapalli , Ram Nagar extension

ANNEXURE-II (See Rule-4)			
List of Areas Prohibited for High Rise Buildings			
Sl. No	**Ward No.**	**Block No.**	**Name of the Locality / Area**
1	**2**	**3**	**4**
1			All the areas as per Annexure-I
2			All notified slum areas and E.W.S Housing areas.

GOOTY MUNICIPALITY

ANNEXURE-I
(See Rule-4)

List of Old/ Existing Built-Up Areas/ Congested Areas/ Settlement/ Gram Khantam/ Abadi

Sl.No.	Ward No.	Block No.	Name of the Lociality / Area
1	**2**	**3**	**4**
1	7	Chenepalli	Surasingannapalli
2	8	Chenepalli	SC Colony
3	8	Chenepalli	Rouf Makanam
4	9	Chenepalli	Ayyappa Colony
5	1st	Gooty	Dasari Stsreet
6	2	Gooty	Paimala Street
7	3	Gooty	Besta Street & Chakala Street
8	4	Gooty	Kamatam Street & Kota Street
9	5 & 6	Gooty	Kota Area
10	7	Gooty	SC colony & Gajula Bavi Street & Kabela Street
11	9	Gooty	SBI Back side Area
12	9	Gooty	CPI Colony
13	10	Gooty	Gandhi Nagar & Chelopalli

ANNEXURE-II
(See Rule-4)

List of Areas Prohibited for High Rise Buildings

Sl. No	Ward No.	Block No.	Name of the Locality / Area
1	**2**	**3**	**4**
1			All the areas as per Annexure-I

GUNTAKAL MUNICIPALITY			
ANNEXURE-I (See Rule-4)			
List of Old/ Existing Built-Up Areas/ Congested Areas/ Settlement/ Gram Khantam/ Abadi			
Sl.No.	**Ward No.**	**Block No.**	**Name of the Lociality / Area**
1	**2**	**3**	**4**
1	17		Sunkalamma Temple (Notified Slum) at Prased Thatre, Samsunpuram (Notified Slum), Ambammagudi (Notified Slum), Kataka Vedi, Mahandra Street
2	11		Roshan Street, Anthony Street (Notified Slum), Ramaswamy Gudi
3	12		Satyanarayana Pata (Notified Slum)
4	16		S.L.V Theatre Road, Geetha Theatre Road, Crown Theatre Road, Noranie Masjid Burial Ground area
5	11		Jayanthikistaiah Vedi, Gandhi Circle Area (Cenara Bank Circle)
6	10		Mandi Bazar, Station Road, Anjuman Street, Sofiya Street, I Town Police Station
7	9		D.M.M Gate Rd, Kanyakaparemeswarei Temple, Andhra Bank Rd
8	8		Guntabavi Street, Mominabad Gutta, Old Bus Stand Area.
9	20		Opp: Municipal Office, Opp: Rotary School (Notified Slum), Umamaheswar Nagar (Notified Slum).
10	6		Opp: Ganta Church(Power Office), , Benchikottala, Opp: Edgamasjid area, Bhagyanagar, Dandumitta up to Power House Rd, Acharamma kottala, Opp:R&B Gandhi Circle, Opp: DMM Gate Road both Side
11	16, 08, 09, 10, 20		M.G.Road Both Side
12	5		Porters Line Masjid (Notified Slum)
13	13		Valmiki Circle to Sweepers Colony, At S.N.Peta
14	2		Opp: Telephone Exchange, Modinabad.
15	4		Old Acharamma Kottala
16	20		Ganga Nagar (Notified Slum)
17	6		Masthanpeta (Notified Slum)
18	19		Hanumesh Nagar (Notified Slum)
19	23		Srilanka Colony (Notified Slum)
20	23		Ambedkar Nagar (Notified Slum)
21	23		Gutta area Old Guntakal (Notified Slum)
22	18		Harizanawada in Old Guntakal (Notified Slum)
23	18		Kamal Sab Thota I & II (Notified Slum)
24	18		Church Colony at 60 feet road (Notified Slum)
25	18		60 feet road Survey No.453 (Notified Slum)
26	18		Kathilagare (Notified Slum)
27	1		Diddi Kottala at I.O.C (Notified Slum)
28	12		Maruthinagar (Notified Slum)
29	18		ACS Mill Area (Notified Slum)
30	13		B.T.Pakkirappa Colony (Notified Slum)
31	1		Diddi Kottala, Near New H.P.C (Notified Slum)
32	16		Yellamma Thaggu (Notified Slum)
33	20		Hamali Colony (Notified Slum)
34	2		Modinabad (Notified Slum)
35	13		Sweeper Colony (Notified Slum)
36	2		Modinabad Harixanawada (Notified Slum)
37	17		Indira Nagar (Notified Slum)
38	6		Shikarigeri Kottakottala (Notified Slum)
39	23		P.W.D Guest House (Notified Slum)

ANNEXURE-II (See Rule-4)			
List of Areas Prohibited for High Rise Buildings			
Sl. No	**Ward No.**	**Block No.**	**Name of the Locality / Area**
1	**2**	**3**	**4**
1	20		Opp: Ankalammagudi Vedi (Notified Slum) , Erukula Vedi
2	21		Sivalayam Vedi , Vuruvakeli Vedi.
3	22		Kachari Katta ,Pothappa Katta, Reddy Vedi, Ragemana Katta, kuuruva Geri & Kurucha Geri (Notified Slum), Vaddi Geri
4	23		Jamiyamasjid Area, Gandhi Nagar (Notified Slum), Kollapuram Gudi (Harijana Vedi Notified Slum), Gudisageri (Notified Slum)

5	18		Jagathgurumattam (Notified Slum), Harijana wada Old Guntakal, Opp: Mastan Vali Darga (Notified Slum)
6	14		Patharathe Sivalayam Temple Area, Reddy Street, Tatakula Veedi of Ambamma Gudi Kunta, Benchikottala Shikarigeri kunta, Around Summer Storage Tank Alur Road, Ganga Nagar Kunta, Mahaboob Nagar Kunta, Pedda kunta, kukala kunta, Kumuregare Kunta, Harijana wada Old Guntakal, Kunta, Guntakal (V) & Thiminaclerela (V)

HINDUPUR MUNICIPALITY

ANNEXURE-I
(See Rule-4)

List of Old/ Existing Built-Up Areas/ Congested Areas/ Settlement/ Gram Khantam/ Abadi

Sl.No.	Ward No.	Block No.	Name of the Lociality / Area
1	2	3	4
1	1		Abadpet
2	2		J.V.S.Lane, Old State Bank Lane & Mukkidipeta (Part)
3	3		Mukkidipeta (Part)
4	4		Sreekantapuram
5	5		Ramabajanamandir Area (Lakshmipuram)
6	6		Shankarappa Street, Sai Baba Temple Area & Maimon Mosque
7	7		Kamasalapeta (Part), Main Bazar (Part)
8	8		Jaladurgamma Temple Area, Kamasalapeta (Part)
9	9		Venkateswara Talkes Area,
10	10		Ambadkar Nagar
11	11		II Town Police Station Area, B.P.Street
12	12		Kota Area, Water Tank Area (Kota)
13	13		Boyapeta (Part), Rathigadda Vedhi
14	14		Boyapeta (Part), Nimkampalli Road (Part)
15	15		Mangalapeta, Main Bazar (Part), Saraswathi vidhyamandir Area
16	16		Nut Bazar, Tippukhan Street Area
17	17		Gandhi Nagar, Karunapuram, & Old Husnabad Area
18	18		Azad Nagar Area
19	19		Sathya Narayanapeta Area
20	20		Nimkampalli Old Area
21	21		S.Sadlapalli Old Area
22	22		Pochnapalli
23	23		Sugur Old Area
24	24		Mothukapalli & Kothakapulapalli
25	25		-
26	26		Melapuram Old Area, Nagulakata Area (Melapuram), Gulzarpeta (RPGT Road)
27	27		Old Muddareddypalli Area, Nandi Circle Area
28	28		Singareddy palli Old Area
29	29		Kotnur Old Area, Anjinayaswami Temple Area
30	30		Kollakunta Old Area

ANNEXURE-II
(See Rule-4)

List of Areas Prohibited for High Rise Buildings

Sl. No	Ward No.	Block No.	Name of the Locality / Area
1	2	3	4
1			All the areas as per Annexure-I
2			All notified slum areas and E.W.S Housing areas.

KADIRI MUNICIPALITY			
ANNEXURE-I (See Rule-4)			
List of Old/ Existing Built-Up Areas/ Congested Areas/ Settlement/ Gram Khantam/ Abadi			
Sl.No.	**Ward No.**	**Block No.**	**Name of the Lociality / Area**
1	**2**	**3**	**4**
1	1		Church Road, College Road, Clock Tower, Khaja Nagar, Police Lines, Bypass Road, Revenue Colony, Jandamaanu Street, Gangireddypalli Street, Chairman Street, Vemareddy Circle, Old Bustand, Adapala Street, Ameen Nagar, New Harizanawada, Gandhi Nagar, NGO Colony, Arunodaya Colony, RS Rd, Municipal Quarters Area, Sharoff Narayana Street, Kasthuribai Street, Sangam Theatre backside.
2	2		Hindupur Road, Old Koneru Street, Jonna Street, Chavadi
3	3		Jonna Street, Somagutta Street
4	4		Devalayam Bazar, Hindupur Rd, Car Street, Agajala Street, Temple Street, Bramhim Street, Rajanayak Street, Chintamanu Street
5	5		Temple Street, Devalayam Bazar, Car Street, Chintamanu Street, Sivalayam Street, MG Road, Dakshinagopuram Street, Jamedar Street, Temple, TTD Kalyanamantapam, Koneru, Poola Street.
6	6		MG Road, Mattavari Street, Kothularamayya Street, Karnalavari Street, Puttaparthivari Street, Chowk
7	7		Iqbal Street, Javukupalyam Area, Gannumia Street, Tummala Road (part)
8	8		Old Medara Street Area, Mangalivenkatappa Street, Valisaab Road, Shahameeria Street, Old Andhra Bank Area
9	9		Market Area, Byepass Road, Slaughter House Area, Bellary Compound Area, Nana Dargah Area, Aravagudiselu, Madanapalli Road, Rayachoti Road, Mashanampeta Area, Mekala maabu Street, Kummariveedhi Area, Mandi Bazar Area, Old Market Yard
10	10		Iqbal Street, Jamia Masjid Area, Mahalvari Street Area, Kanchukota Area, Slaghter House Area, Market Area, Chilumu Mahaboob Basha Street, Nagaraj Street, Gajjalareddypalli, Nizamvali Colony upto Railway Track, Nanavali Dargah backside Area, Hirani Quarters, Shaiku Hotel Area, Abubacker Street.
11	11		Azad Street, Valisaab Road, Chowk, Alamkhan Masjid Area, Old Kummara Street, Iqbal Road, Thyagaraju Street, Shakir Street, Nallacheruvu Basha Street, Chavadi Front side.
12	12		Old Statebank Street, Valisaab Road, Ansar Street, Old Harizanawada, Andhra Bank backside.
13	13		NagiReddypalli, Berupalli Area, Jadalayya Mantapam.
14	14		Saidapuram, Murthipalli, Nallagutta, Indira Colony, Weavers Colony, Pillavanka Colony, Erragunta Palli.
15	15		Erragunta Palli, Kummaramani Palli, Kutagulla (Anantapur Road), SC Colony, ST Colony.
16	16		Kutagulla (Part), Saidapuram (Part),
17	17		Kutagulla (Part), Pulivendula Road, Boya Ramannagari Palli, Kotannagari Palli, Ayyavaripalli.

ANNEXURE-II (See Rule-4)			
List of Areas Prohibited for High Rise Buildings			
Sl. No	**Ward No.**	**Block No.**	**Name of the Locality / Area**
1	**2**	**3**	**4**
1			All the areas as per Annexure-I

KALYANDURG MUNICIPALITY			
ANNEXURE-I (See Rule-4)			
List of Old/ Existing Built-Up Areas/ Congested Areas/ Settlement/ Gram Khantam/ Abadi			
Sl.No.	**Ward No.**	**Block No.**	**Name of the Lociality / Area**
1	**2**	**3**	**4**
1	1 and 2		Kota Veedhi
2	4		Chakali Veedhi, Bavi basappa Veedhi
3	5		Chowdamma Gudi veedhi
4	6		Pujari Veedhi and Siddappa Vanka
5	7		Siddappa Vanka
6	8		Jayanagar, Vadde colony, Sankarappa Thota, Yerranela, Kammanuchetlu Veedhi, Marempalli,
7	9A		Gareeb Nagar
8	9B		Vidya Nagar
9	9C		Gundlappa Doddi, Police Quarters
10	9D		Revenue Colony
11	9E		Teachers Colony
12	10A		Kummara Veedhi
13	10B		SC Colony
14	11		Vadde Banda Veedhi, Rachappa Kunta

ANNEXURE-II (See Rule-4)			
List of Areas Prohibited for High Rise Buildings			
Sl. No	**Ward No.**	**Block No.**	**Name of the Locality / Area**
1	**2**	**3**	**4**
1			All the areas as per Annexure-I

MADAKASIRA MUNICIPALITY			
ANNEXURE-I (See Rule-4)			
List of Old/ Existing Built-Up Areas/ Congested Areas/ Settlement/ Gram Khantam/ Abadi			
Sl.No.	**Ward No.**	**Block No.**	**Name of the Lociality / Area**
1	**2**	**3**	**4**
1	1		chipuleti, SC colony, chatram road
2	3		chowtipalli, Ajaya temple road
3	5		New SC colony, old sc colony, chakali kunta.
4	7		Aryapeta
5	8		Boyageri, near pavagoda road (burial ground)
6	9		Chakalaveedhi
7	10		Kamsala Veedhi
8	11		Mutyalamma gudi veedhi
9	12		C.S. Bandameeda
10	13		Kota Veedhi, Chinnakaranala veedhi, Pedda Karanalaveedhi
11	14		Talari Veedhi
12	17		Gollahatti
13	18		Malerappamm, Aswattakatta road
14	19		Begarladapalli, SC colony roads
15	20		Malli Nayakanapalli, ST colony road.

ANNEXURE-II (See Rule-4)			
List of Areas Prohibited for High Rise Buildings			
Sl. No	**Ward No.**	**Block No.**	**Name of the Locality / Area**
1	**2**	**3**	**4**
1			All the areas as per Annexure-I

PAMIDI MUNICIPALITY			
ANNEXURE-I (See Rule-4)			
List of Old/ Existing Built-Up Areas/ Congested Areas/ Settlement/ Gram Khantam/ Abadi			
Sl.No.	**Ward No.**	**Block No.**	**Name of the Lociality / Area**
1	**2**	**3**	**4**
1	1		Santha market Area,Kottala Peta,Teachers Colopny, Nagi Reddy Colony, B.C.C. Colony, Davoud Nagar,Chakala Veedhi, Nehuru Nagar,
2	2		Besta Veedhi,
3	3		1st ward school area,Yellamma Street,
4	4		Lakshmi Narayana Temple Street, 1st ward school area,
5	5		Brahmin Street,
6	6		Kota Veedhi, Brahmin Street,
7	7		Durgamma Gudi Veedhi(S.C.Colony), Kota Street,
8	8		Kota Veedhi,
9	9		Amidala Street,Showkar Street,Cheemala Street,
10	10		Amidala Street,Kalavagadda Veedhi,Cheemala Street, Bhogeswara Temple Area,
11	11		Kalavagadda Veedhi,Vade Veedhi,

ANNEXURE-II (See Rule-4)			
List of Areas Prohibited for High Rise Buildings			
Sl. No	**Ward No.**	**Block No.**	**Name of the Locality / Area**
1	**2**	**3**	**4**
1			All the areas as per Annexure-I

RAYADURG MUNICIPALITY			
ANNEXURE-I (See Rule-4)			
List of Old/ Existing Built-Up Areas/ Congested Areas/ Settlement/ Gram Khantam/ Abadi			
Sl.No.	**Ward No.**	**Block No.**	**Name of the Lociality / Area**
1	**2**	**3**	**4**
1	1	1	Chennaveera Swamy Temple area
2	1	2	Kumbaragunda Veedhi
3	1	3	Palabavi
4	1	4	Siddeswara Colony
5	2	1	Utlakunta Area
6	2	2	Gopala Swamy gudi area
7	3	1	Kalegari Veedhi
8	3	2	Nimmakayala Masque area & Dasabuja Ganapathi area
9	3	3	
10	4	1	Atmakur Street, Kota, and Papabatla bavi veedhi
11	4	2	
12	5	1	Gajula Veedhi
13	5	2	Kummarageri & Kota
14	6	1	Fire Office DPEP School area
15	6	2	
16	7	1	Ambedkar Nagara-II
17	7	2	
18	7	3	Harijana wada
19	9	5	Kothigutta Area
20	10	4	Hospital Back side
21	10	5	Gajula Street, Chandra babu naidu colony
22	12	1	Korise Veedhi
23	12	2	Muchiga Veedhi
24	13	1	Dabbadi Chenna Mallappa Street
25	13	1	Maremma gudi Street
26	14	1	Kallimatam High School area

ANNEXURE-II (See Rule-4)			
List of Areas Prohibited for High Rise Buildings			
Sl. No	**Ward No.**	**Block No.**	**Name of the Locality / Area**
1	**2**	**3**	**4**
1			All the areas as per Annexure-I

TADIPATRI MUNICIPALITY			
ANNEXURE-I (See Rule-4)			
List of Old/ Existing Built-Up Areas/ Congested Areas/ Settlement/ Gram Khantam/ Abadi			
Sl.No.	**Ward No.**	**Block No.**	**Name of the Lociality / Area**
1	**2**	**3**	**4**
1	1		Sunkalamma palem,Thurpu palem, CPI Colony, Ganesh Nagar
2	2		Harijanawada,Ambedkar Nagar, Chenatha Colony, Ragithota palem
3	3 part		Reddy vari palem, Golla palem, Tailors colony
4	4		Pathakota, Porata colony, Ragithota palem
5	5		Rajaka peta, Chinna Bazar
6	6		Chowdary Street, Chinna Bazar, Gajula palem, Adduvari Veedi, Rajaka Street
7	7		Katika Street, Maniyar Street, Rayachuru Street
8	8		Peddammagudi area, Omshanthi Nagar, Indira Nagar,Vivekananda Nagar, Sivalayam Road, Ogetivari street
9	9		Yeddulgeri, Girls High School Road area, Kammavari veedi, Ogeti street
10	10		Yetigadda palem, Anjaneyaswamy Temple area, Peddammagudi area
11	11		Nasuruddinvari street, Chinna Bazar, Rojamosque street, Milk strore street, yeddulageri, Katika veedi
12	12		Padamatigeri area, Banda Majeed area, Behind Ramachandra lodge area
13	13 part		Vadla palem, Bowli mosque area, Jinkavari street, Kaluvagadda street
14	14		Asupatri palem area, Kondappa layout area, Vaijayanagar Colony area
15	15 part		Gandhi Nagar area, Behind Taluka office area, Vijaya nagar colony area, Sugali colony, Mangali colony
16	16 part		Sreenivasapuram Erukala colony, peerla manyam, Anjaneyamanyam, Nandalapadu area, Kristian peta, Sanyasayya matam

ANNEXURE-II (See Rule-4)			
List of Areas Prohibited for High Rise Buildings			
Sl. No	**Ward No.**	**Block No.**	**Name of the Locality / Area**
1	**2**	**3**	**4**
1			All the areas as per Annexure-I

PUTTAPARTHY UDA			
ANNEXURE-I (See Rule-4)			
List of Old/ Existing Built-Up Areas/ Congested Areas/ Settlement/ Gram Khantam/ Abadi			
Sl.No.	**Ward No.**	**Block No.**	**Name of the Lociality / Area**
1	**2**	**3**	**4**
1	1	1 to 7	Sai nagar (Puttaparthi village)
2	2	1 to 2 & 4 to 10	Sivalayam area, Kota area and pedda bazar area (Puttaparthy village)
3	3	1 to 14	Govinda Pet, Kummara Pet, Canteen back side, Gopuram road Est & West areas (except main road), Samandhi road, SBI road, vivekananda road, Municipal office backside and chithravarhi By-pass road area (Puttaparthi village)
4	4	2 to 7	Karnatakanagepalli village
5	5	1 to 8 & 10 to 11	Kovelaguttapalli village
6	6	1 to 16	Rayalavaripalli village
7	7	1 to 7	chinna kammavaripalli village
8	8	3 to 4 & 6 to 12	pedd kammavaripalli village
9	1(P), 2(P) & 3(P)	1 to 14 & 16 to 17	yemumulapalli village (except main road)
10	5		Gokulam, yenumulapalli village (except main road)
11	6		guntur colony, kalparuksham area and gutta area yenumulapalli village (except chithravathi road)
12	2 & 3		Brahmanapalli main village and Brahmanapalli thanda except main road.
13	1 (P), 2 & 3		Beedupalli main village, SC colony & BC colony.
14	4 & 5		Badenaik thanda, gone naik thanda & prasanthi gram (except main road), beedupalli village.

ANNEXURE-II (See Rule-4)			
List of Areas Prohibited for High Rise Buildings			
Sl. No	**Ward No.**	**Block No.**	**Name of the Locality / Area**
1	**2**	**3**	**4**
1			All the areas as per Annexure-I

CHITTOOR MUNICIPALITY			
ANNEXURE-I (See Rule-4)			
List of Old/ Existing Built-Up Areas/ Congested Areas/ Settlement/ Gram Khantam/ Abadi			
Sl.No.	Ward No.	Block No.	Name of the Lociality / Area
1	2	3	4
1	1		Kattamanchi H/W, Ponnai street, Gandla street, Karnam street, Kattamanchi Reddy street, Perumal koil st.
2	2		Kongareddypalli, Readspet, Vengalrao colony
3	3		Greamspet, Godugumuru, Gandla street
4	4		Gandhi Nagar, Balaji Nagar, Sale street, Chamundeswari Temple, Pillari koil st. @ Vaddigudiselu, Marata st., Ambedkar Nagar, Sankaraiah Gunta,Srinagar colony, Maseedu mitta, Oti Cheruvu, Iruvaram H/W, Iruvaram
5	5		Bazar st., Aragonda road
6	6		Ellamma st., Dongala Bavi st., Ragimanu st.,Ellamma st., Pillari koil st., Gandla street, Chavatapalli road, Kailasapuram(V), Vannior st.
7	7		Rangachari st., Damayanthi st., Chavadi st., Brahmin st., Komati st., Jandamanu st.
8	8		Gandhi Road, Ranganayaki st., Jandamanu st., Balasundaram st., Old Bandikhana st., Rangachari st., Thotapalyam, Santhapet road, Lakshmi Talkies
9	9		D.I.Road, Vannior block, Gurappa Naidu st., Jandamanu st.
10	10		Thotapalyam, Vegitable market, Gandhi Road, High Road, D.I.Road, Omkar Medical lane, Nethaji road, Pedda H/W, Seshapiran st., Gopal Reddy st., Yadava st.
11	11		Bazar st., Buchi st., Sudarayyar st., Gandla street, Ramulavari gudi st., Madha gudi st., OTK road
12	12		Bazar st., Ashada st., Pillari gudi st., Vysya lane, Ramula gudi st., Kanniappa st., Nimandakara st., Asramam st., Swamy Reddy st.
13	13		Rangachari st., Bandla st., Chambadi st., Eswaragudi st., Anjaneya Temple, Old Market st, Tenebanda st, Thotapalyam Ext.
14	14		Madha gudi st., Khadarmiran st., Kayanikattu st., Peeran saheb st., Hospital road, Kotachari st., Kattukalva st., Goolingspet, Palamaner road, Ramnagar colony
15	15		Scavengers colony, Chamanthipuram, Saravanapuram, Thapovanam, Vinayakapuram, Ashokapuram, Sowcar pet, Lalugarden, Ambedkar Nagar, Sankaraiah Gunta
16	16		Madha gudi st., Swamy Mestry st., Church st., Devarayareddy st., Vepamanu st., Kattukalva st.
17	17		Kattukalva st., Ponniamman koil st., Sundarayyar st., Kummara st., T.V.Naidu st., Subedar st.
18	18		P.H.Road, Mandi st., Palamaner road, Dr.Pathi road, Ponniamman koil st., Muthu mestry st., Madha gudi st.
19	19		Thanappachetty st., Jailkhana st.,Hasankhan st, ASM st., Mittoor Nehru st.
20	20		Annaswamy st., Hasankhan st., Jailkhana st., Post Office lane
21	21		Thimmasamudram H/W, Chavatapalli, Kokavandla vuru,Kodigunta palli, Vengampalli, Indira nagar, T.Chavata Palli, CCS nagar
22	22		Scavengers colony, Thimmasamudram H/W, Chengalrayamitta, C.K.palli, Sambaiah Kandiga H/W, Raghuramnagar, Reserve Police colony, Morigani palli, Kumarnagar colony, Srinivasa nagar, Vengalrao colony
23	23		Scavengers colony, Barbars colony road, S.N.puram, Vivekananda nagar
24	24		C.G.Palli road, S.N.puram, Gandhi Nagar
25	25		Valliyappa nagar, Reddygunta & Housing colony, Gangasagaram
26	26		Kazoor,Iruvaram, Pothambattu PH colony, Lepracy colony
27	27		Ramnagar colony, Telephone colony, Janakara palli
28	28		Ramnagar colony, K.N.colony, Ganganapalli, Thenebanda road, Dharmarajula gudi st.

ANNEXURE-II (See Rule-4)			
List of Areas Prohibited for High Rise Buildings			
Sl. No	Ward No.	Block No.	Name of the Locality / Area
1	2	3	4
1	1		Kattamanchi H/W, Ponnai street, Gandla street, arnam street,

			Kattamanchi Reddy street, Perumal koil st.
2	2		Kongareddypalli, Readspet, Vengalrao colony
3	3		Greamspet, Godugumuru, Gandla street
4	4		Gandhi Nagar, Balaji Nagar, Sale street, Chamundeswari Temple, Pillari koil st. @ Vaddigudiselu, Marata st., Ambedkar Nagar, Sankaraiah Gunta, Srinagar colony, Maseedu mitta, Oti Cheruvu, Iruvaram H/W, Iruvaram
5	5		Ellamma st., Dongala Bavi st., Ellamma st., Pillari koil st., Gandla street,Kailasapuram(V), Vannior st.
6	7		Damayanthi st., Chavadi st., Brahmin st., Komati st.
7	8		Ranganayaki st., Balasundaram st., Old Bandikhana st., Thotapalyam
8	9		Vannior block, Gurappa Naidu st.
9	10		Thotapalyam, Vegitable market, Omkar , Medical lane, Nethaji road, Pedda H/W, Gopal Reddy st., Yadava st.
10	11		Buchi st., Sudarayyar st., Gandla street, Ramulavari gudi st.
11	12		Ashada st., Pillari gudi st., Vysya lane, Ramula gudi st., Kanniappa st., Nimandakara st., Asramam st., Swamy Reddy st.
12	13		Bandla st., Chambadi st., Old Market st., Tenebanda st., Thotapalyam Ext.
13	14		Khadarmiran st., Kayanikattu st., Peeran saheb st., Kotachari st., Kattukalva st., Goolingspet, Ramnagar colony
14	15		Scavengers colony, Chamanthipuram, Saravanapuram, Thapovanam, Vinayakapuram, Ashokapuram, Sowcar pet, Lalugarden, Ambedkar Nagar, Sankaraiah Gunta
15	16		Swamy Mestry st, Devarayareddy st, Vepamanu st, Kattukalva st.
16	17		Ponniamman koil st., Sundarayyar st. Kummara st., T.V.Naidu st., Subedar st.
17	18		Mandi st., Dr.Pathi road, Muthu mestry st.
18	19		Thanappachetty st., Jailkhana st., Hasankhan st, ASM st., Mittoor, Nehru st.
19	20		Annaswamy st., Hasankhan st., Jailkhana st., Post Office lane
20	21		Thimmasamudram H/W, Kokavandla vuru, Kodigunta palli, Vengampalli, Indira nagar, T.Chavata Palli, CCS nagar
21	22		Scavengers colony, Thimmasamudram H/W, Chengalrayamitta, C.K.palli, Sambaiah Kandiga H/W, Raghuramnagar; Reserve Police colony, Morigani palli, Kumarnagar colony, Srinivasa nagar, Vengalrao clny
22	23		Scavengers clny,Barbars colony rd,S.N.puram, Vivekanandanagar
23	24		C.G.Palli road, S.N.puram, Gandhi Nagar
24	25		Valliyappa nagar, Reddygunta & Housing colony, Gangasagaram
25	26		Kazoor, Iruvaram, Pothambattu PH colony, Lepracy colony
26	27		Ramnagar colony, Telephone colony, Janakara palli
27	28		Ramnagar colony, K.N.colony, Ganganapalli, Thenebanda road, Dharmarajula gudi st.

MADANAPALLE MUNICIPALITY			
ANNEXURE-I (See Rule-4)			
List of Old/ Existing Built-Up Areas/ Congested Areas/ Settlement/ Gram Khantam/ Abadi			
Sl.No.	Ward No.	Block No.	Name of the Lociality / Area
1	2	3	4
1	1		Nakkaladinne, Nakkaladinne Tanda, Kumarapuram, Girirao Street, Gandhi Puram, Ammineni Street. (OLD)
2	2		Dr.Cousins Road, Ratakonda Street, Venkateswara Colony, Co-operative Colony. (OLD); P & T Colony, Reddy's colony, Ravindra Nagar, R.K.Layout and Extension, Raja Nagar, Maruthi Nagar. “Built up area " ; West Kurava vanka, "Conjested area ".
3	3		N.G.Palli, N.G.Palli School Road, Rama Rao colony, Municipal workers colony. (OLD).; Prasanth Nagar, Chowdeswari Nagar, SBI colony, Gollapalli. “Built up area ".; Vijaya Nagar Colony, Cheekali gutta, Gowthami nagar. “Conjested area ".
4	4		Krishna Nagar, Judicial Colony, Indira Nagar, Anjaneyaswami Temple Street, Ananthaiah Bangalow, JNR Street, Meat Market Street. (OLD).; Donthi Layout, Siddappa Naidu layout, Nursing Home lane, Pyara Nagar (Built up area). Santha Gate “Conjested area ".
5	5		Apparao Street, Poola Street, Pothulappa Street, Apparao Thota, Krishnavidyalayam street (OLD).; Sydapeta (Built up area)
6	6		Rangareddy Street, Gandla Street, Gundloor Street, Devalam Street (OLD); Devalam Street Extension, Shadi Mahel area (Built up area)
7	7		Apparao street, Thyagaraja Street, Yarragangadharam Street, Chettivari Street, Raghavendra Rao Street. (OLD)
8	8		Sastry Street, Chakali Street, T.N.Venkata Subba Reddy Street, Court Ramachari Street, Nehru Bazar. (OLD); Patha Kacheri Street. (Conjested area)
9	9		Penchupadu Street, Appakonda Street. (OLD); Yahalli Layout. (Builtup area)
10	10		Teru Bazaar, Valmiki Street, Kamma Street Lane (OLD).
11	11		Kota Street, Sipai Street, RR Street. (OLD)
12	12		Thygaraja Street, Agadtha Street. (OLD)
13	13		Dhaknipet, Ghousiya Street (OLD)
14	14		CTM Road, T.N.Nagireddy Street, Prakasem Street, Nadendla Narappa Street, East Kothapeta (OLD)
15	15		West Kothapeta, Subash Road, Barma Street, Kammagadda Street, Gopal Reddy Street, Fleshing Pet, Gurrappa Naidu Street, Reddeppa Naidu Colony and Extension. (Built up area)
16	16		Pairamanna Street, Shanwaz Street, Srirama Govindappa Street, Ramakrishna Street, Srirama Yerrappa Street, Lachareddy Street, Lingannagari Street, Subash Road Extension (Seven Hills School), Seshappa Thota and Extension, Basinikonda Colony (Builtup Area)
17	17		Vaddipalli, NVT Street and Extension (OLD); Rajeev Nagar, NVR Layout, Jayalakshmi Layout, Sarada Nagar (Builtup area)

ANNEXURE-II (See Rule-4)			
List of Areas Prohibited for High Rise Buildings			
Sl. No	**Ward No.**	**Block No.**	**Name of the Locality / Area**
1	**2**	**3**	**4**
1	1		Nakkaladinne Tanda
2	2		P & T Colony, Rami Reddy Layout Extension, Maruthi Nagar
3	3		Rama Rao Colony, Cheekaligutta, Vijaya Nagar Colony.
4	4		Indira Nagar, Anjaneya Swami Temple Street.
5	5		Syda peta, Apparao Street, Poola Street, Pothulappa Street, Krishna Vidyalayam Street.
6	6		Rangareddy Street, Gandla Street, Gundloor Street, Devalam Street (OLD)
			Devalam Street Extension, Shadi Mahel area (Built up area)
7	7		Apparao street, Thyagaraja Street, Yarragangadharam Street, Chettivari Street, Raghavendra Rao Street. (OLD)
8	8		Sastry Street, Chakali Street, T.N.Venkata Subba Reddy Street, Court Ramachari Street, Nehru Bazar. (OLD)
			Patha Kacheri Street. (Conjested area)
9	9		Penchupadu Street, Appakonda Street. (OLD)
			Yahalli Layout. (Builtup area)
10	10		Teru Bazaar, Valmiki Street, Kamma Street Lane (OLD).
11	11		Kota Street, Sipai Street, RR Street. (OLD)
12	12		Thygaraja Street, Agadtha Street. (OLD)
14	14		Prakasam Street, Nadella Narappa Street.
17	17		Vaddi Palli.

NAGARI MUNICIPALITY			
ANNEXURE-I (See Rule-4)			
List of Old/ Existing Built-Up Areas/ Congested Areas/ Settlement/ Gram Khantam/ Abadi			
Sl.No.	Ward No.	Block No.	Name of the Lociality / Area
1	2	3	4
1	1	1	Kanamitta to Mandapam Cross
2	2	2	Kakavedu
3	3	3	Mahathma Nagar, S.V.Nagar, S.R.Nagar, Kola St, O.B.K.St
4	4	4	Sathram St, Arva Kuppa, Eeswara Gudi St, Bari St, Prakasam Road, Gandhi Nagar, Sairam Veedi, Monagari Veedi
5	5	5	Nagari D/W, V.K.S.Layout, Nagalapuram Road
6	6	6	T.R.Kandriga, A.N.Kandriga, Bugga Kandriga
7	7	7	Keelapattu 1st, 2nd, 3rd St, B.C.Colony, Perumal Nagar, Keelapattu D/W
8	8	8	Netham Kandriga, Lakshmi Puram, Vasudeva Puram, S.T.Colony
9	9	9	Ramanaidu Colony, Rasappa Colony, Pallipattu Road South Side , Indira Nagar, Ramnagar (A)
10	10	10	Pallipattu Road Part, Indira Nagar Part, BTM St, Bangaru St, Ramanagar (B) & (C)
11	11	11	Orugantapuram, Salapatteda, Beemanagar, E.K.M D/W, N.T.R.Nagar
			N.T.R.Nagar 3rd St
12	12	12	E.K.M, M.G.Road, Toppamma Gudi St, Reddy Vari Sandu, Kamaraj St, M.V.St, Prakash Nagar
13	13	13	Prakash Nagar Part-1, Perumal Gudi Veedi, S.V.Gudi St, Kamaraj St.Part- 1, M.V.St. Part- 1
14	14	14	K.V.P.R Peta, M.G.Road Narth Part, S.V.Gudi St, Ponniyamma Gudi Veedi, Valallar St, Pavadi St, M.G.R. Nagar
15	15	15	K.V.P.R.Peta, Bhaiyar St, Thathaiah St, Karakanta Puram D/W
16	16	16	K.V.P.R Peta, Variyar Nagar, Vinayakapuram, Sathrawada, Mitta Veedi, Middle St, Anna St, Pallipattu Main Road, Kamashimma Gudi Veedi, Kumara Sandu
17	17	17	Sathrawada, Yaguva Veedi, Aokkallamma Veedi, Arallamma Veedi, Eswara Gudi Veedi, Ellamma Gudi Veedi, S.T.Colony, Adavikothuru Road, Chinna Veedi
18	18	18	Kamsala St, Sathrawada D/W
19	19	19	E.K.M Chavadi St, K.R.Gudi Veedi, S.T.Colony
			Rajiv Gandhi Veedi 1st Street
20	20	20	Pallipattu Road Northside, V.K.M. St, S.V.Gudi Veedi Part-1, Bazzar Gudi Veedi Part-1, Palaniyappa St, Kamaraj St
21	21	21	Pallipattu road Part-2, S.V.Gudi Part-2, Bazzar Gudi Veedi Part-2, Kamaraj Veedi Part-2
22	22	22	Pallipattu Road North, Chinthamanu St, Prakasm Road West, Adam Colony, Peerala Chavadi, Pallegari Veedi, Talari Veedi
23	23	23	Prakasam Road-3, Perumal Gudi Part-2, Gandla Veedi, Chidambara Nagar, Karamala Veedi, Reddy Vari Veedi
24	24	24	Prakasam Road West, Padmavathi Nagar, Anand Lalitha Layout, Guntakatta Veedi
25	25	25	Kasimmitta West, Om Sakthi Gudi Backside, M.P.D.O. Office Lane, LingeesGunta, Vinayakapuram, Chinthalapattada D/W
26	26	26	Chinthalapattada, Kainikattu St- 1& 2, Raja St, Middle St, Ramulu Gudi St, Bazzar St
27	27	27	Ponniyamma Gudi St, Shashamaraj Veedi, Dharama rajula Gudi Veedi
			New St Chinthalapattada, Chakali St

ANNEXURE-II (See Rule-4)			
List of Areas Prohibited for High Rise Buildings			
Sl. No	**Ward No.**	**Block No.**	**Name of the Locality / Area**
1	**2**	**3**	**4**
1			All the areas as per Annexure-I

PALAMANERU MUNICIPALITY			
ANNEXURE-I (See Rule-4)			
List of Old/ Existing Built-Up Areas/ Congested Areas/ Settlement/ Gram Khantam/ Abadi			
Sl.No.	Ward No.	Block No.	Name of the Lociality / Area
1	2	3	4
1	7	1	Masid street
2	6	1	Masid street
3	5	1	Cross Road
4	5	2	K.V. Street
5	5	2	Backside of hospital
6	6	2	K.V. Street
7	8	2	Cross Road
8	10	3	College Road
9	10	3	Nehru Nagar
10	11	3	College Road
11	5	3	Forest Bunglow Street
12	5	3	N.T.R. Nagar
13	4	3	NTR Colony extention
14	11	3	Father's Bunglow
15	12	3	L.I.C. Colony
16	5	3	Police Line
17	10	3	Ambedkar Nagar
18	10	3	Rajiv Gandhi Nagar-1st cross
19	10	3	Ambedkar Nagar
20	4	4	Ambedkar Nagar
21	8	5	Rajaka Street
22	8	5	Sripathirao Street
23	88	5	Chinnagandla Street
24	7	6	Venugopalaswamy Temple Street
25	12	6	College Road
26	10	6	Jandamatham Street
27	9	6	S.T. Colony
28	8	6	Bhajantri Street
29	12	6	Gudiyatham Road
30	12	6	Gaddur Road
31	12	6	Officers Colony
32	12	6	Bankers Colony
33	12	6	Charka Colony
34	12	6	Vidyanagar Colony
35	12	6	Bangini Colony
36	13	7	Gudiyatham Road
37	13	7	Bhajantri Street
38	8	8	Jeyappa Street
39	8	8	Machasion School Street
40	8	8	Gas Office Street
41	7	8	Venugopalaswamy Temple Street
42	8	9	Surappa Street
43	7	9	T.K. Street
44	7	9	Surappa Street
45	8	9	Veera Raghavaiah Street
46	8	9	Sri Muninarayana Street
47	7	10	T.K. Street
48	7	10	Balaram Setty
49	7	10	Ankisetty Street
50	22	11	M.B.T. Road
51	22	11	L.B. Nagar
52	4	11	Lakshminagar
53	5	11	Lakshminagar
54	22	11	Lakshminagar
55	4	11	R.K. Street
56	4	11	Radha Bunglow
57	16	12	Javili Street
58	16	12	Basavannakatta Street
59	15	12	Madanapalli Road
60	16	12	Raguveerareddy Colony
61	15	12	M.C.R. Nagar
62	16	13	Basavannakatta Street

63	16	13	Lingayat Street. Madanapalle Road, Dandapalli Road
64	16	13	Dandapalli Road
65	17	14	Boya Street
66	17	15	Lingayat Street & Kamsala Street
67	16	16	Javili Street & Lingayat Street
68	18	17	Maremma Gudi Street
69	18	17	Javili Street near RTC Bus Stand
70	16	18	Bazar Street
71	18	19	Sannidhi Street, M.M. Ratnam Street & Bazar Street
72	20	20	Ayyakanna Street
73	17	20	Nagarla Street
74	19	20	Tahasildar Street
75	19	21	Gangamma Gudi Street & Balaramsetty Line
76	18	22	Bazar Street
77	2	22	Lakshman Singh Street
78	18	23	Ayyakanna Street
79	21	24	Kasai Street & Ayyakanna Street
80	20	24	Kittanna Mission Street
81	20	24	Bazar Street
82	20	25	Bazar Street & Bandla Sandu
83	24	25	Kakathopu
84	24	25	Kakathopu
85	1	25	Bazar Street & Zilani Cross
87	1	25	MPV Layout
88	1	25	Gandhi Nagar
89		25	Gandhi Nagar
90	23	25	MNS Colony
91		25	Cross Road
92	23	25	Rangapuram
93	23	26	Chittoor Diversion Road
94	22	26	M.C. Palem
95	22	26	Chittoor Diversion Road
96	21	26	Supervisor Sandu
97		27	Zilani Cross
98	21	27	Adiandhra Street
99	21	27	Eddula Santha
100	2	28	Gantavoor
101	2	28	B.C. Colony
102	2	28	Gantavoor
103	2	28	Vinayaka Nagar
104	2	28	Y.S.R. Nagar
105	2	28	Y.S.R. Nagar
106	2	28	Indiramma Colony
107	2	28	Chandrababu Colony
108	2	29	Agarabathi Colony
109	2	29	OLL School Back Side
110	3	29	Gobbilla Kotoor Road
111	3	29	Gobbilla Kotoor Colony
112	3	30	Gobbilla Kotoor
113	11	31	T.S. Agraharam
114	11	31	Leprocy Colony
115	12	32	Bodireddy Palli
116	12	33	Gaddoor
117	14	34	Bommidoddi (Sonia Nagar)
118	14	34	Bommidoddi
119	14	34	Neelukundtla
120	14	34	MBT Road
121	14	34	SC Colony
122	14	34	Shikari Colony & S.C. Colony
123	14	34	Nagamangalam Colony
124	15	34	Y.S. Jagan Colony

ANNEXURE-II (See Rule-4)			
List of Areas Prohibited for High Rise Buildings			
Sl. No	**Ward No.**	**Block No.**	**Name of the Locality / Area**
1	**2**	**3**	**4**
1			All the areas as per Annexure-I

PUNGANURU MUNICIPALITY

ANNEXURE-I
(See Rule-4)

List of Old/ Existing Built-Up Areas/ Congested Areas/ Settlement/ Gram Khantam/ Abadi

Sl.No.	Ward No.	Block No.	Name of the Lociality / Area
1	2	3	4
1	1		S.C. Colony, Prakasam colony, Vanamala dinne road, Gajula Veedhi, Chekkara Malliga Veedhi, Gangamma gudi veedhi, N.T.R. Colony, Mission compound, Chinna Gangama gudi veddi, Jogi indulu, Ram Nagar
2	2		Dasari veedhi, Muriggi mattam veedhi,Mattam Veedhi
3	3		Ramaswamy Gudi Veedhi, China gangamma veddhi
4	4		Ramaswamy Gudi Veedhi,Gangamma gudi veedhi,Kollavari sandu,Dasari veedhi
5	5		Chikkanna Bavi Veedi,Kamalamma Vari sandu,Nagari veedhi
6	6		Chinnaranaswamy gudi veedhi, Gandi kota vari sandu, Nallagundla vari sandu,Chikkanna Bavi Veedi, Kamalapuram vari sandu, Vivekandha nagar
7	7		Chintala veedhi, Mestri anjappa Nagar
8	8		Kodipalli subbarayappa sandu, Kamalapuram vari sandu
9	9		Kummara veedhi,Moddhi naill sandu, Pheto studio sandu
10	10		Mestri venkataswamy sandu,Mallan sandu, Tappa hari sandu,Banla saheb sandu
11	11		Ice factorey sand, Turpu mogasala veedhi
12	12		Harijana vada,Chamundi gaudi veedhi, Topumattam
13	13		Mullungi vandla sandu,Ethi raju jetty sandu,Ramaswamy Gudi Veedhi,Old telephone office sandu
14	14		Basavanna kotta veedhi, Mullangi vari veedhi,
15	15		Anjaneya swamy gudi veedi,A.V.Rao street, Agarthala veedhi road
16	16		Venkataramana swamy gudi veedhi, Mission sandu
17	17		Rathi maseed veedhi,A.V.Rao street No:2, Chinna chengareddy veedhi
18	18		Theru veedhi, Sharaf katta veedhi, Dr.Siddappa line - 2
19	19		Bazar veedhi, Dr.Siddappa line - 2
20	20		Nanabala veedhi, K.V.S Sandu, Chengareddy veedhi – 2, Lattary Hydar sandu, Banlanettu sandu
21	21		Rangareddy veedhi, Nanabala veedhi
22	22		Subedar veedhi part – 1, Nanabala veedhi part - 2
23	23		High school street, Venkataramana swamy gudi veedhi, Poola vari sandu, Devid sandu, Ramireddy sandu, T.M.Palem road line
24	24		Reddy veedhi, Manchala vari veedhi, Metla krishnareddy sandu, Banlanettu veedhi Opp: Old SBI, Phatan sandu
25	25		Turpu mogasala veedhi, Nalla gangamma gudi veedhi
26	26		Konetipalyam, T.M.Palem road line
27	27		Police line, Chandrakanta veedhi, Gokul kalyanamandapam road, Rahamath Nagar, Narappa colony, Ubedulla khan Compound, Yetigaddapalyam, Rajareddy compound,Nanabala compound
28	28		Kothapeta, Amba Chinnabba Veedhi, T.B.Bakaside Road, Kothaindlu, T.B.Side Road, Indhira Nagar Slum, Rajeev Gandhi Veedhi, Thyagaraju Veedhi, Jogi indulu, Dullavari Indlu, Jogi Indulu Near Cold Storage
29	29		Melupatla Village, Melupatla Harijanavada, Housing Colony slam Area, Bhagathsingh Colony Slum Area
30	30		Melupatla Part, Chenglapuram, Arava Indlu
31	31		Teachers Colony, Surya Nagar, MPL.Road to Teachers Colony Rad

ANNEXURE-II
(See Rule-4)

List of Areas Prohibited for High Rise Buildings

Sl. No	Ward No.	Block No.	Name of the Locality / Area
1	2	3	4
1			All the areas as per Annexure-I

SRIKALAHASTHI MUNICIPALITY

ANNEXURE-I
(See Rule-4)

List of Old/ Existing Built-Up Areas/ Congested Areas/ Settlement/ Gram Khantam/ Abadi

Sl.No.	Ward No.	Block No.	Name of the Lociality / Area
1	2	3	4
1	1		M.M.Wada, Manchineela Gunta Area, N.T.R.Nagar, Indira Nagar, Veera Mustipalem, Kothakoneru, Yanadi Colony, Sathanupalem,
2	2		Part of Kondamitta Gandla Street, Kondamitta Eastern Side Area, J.R.Street, Big Mosque, Surrounding Area
3	3		Northera Side of Nehru Street, Jetty Palem Part, Kondamitta West, Siddalaiah Konda Area, Bazaar Street, Norther Side, Karnala Street, Puramvari Street, Peerla chavidi Street, Old Milk depot lane, Vanadaraja Swamy Temple Surrounding Area, Old Post Office Lane Devidi Road and J.R.Street, North Part,
4	4		Digura Sannidhi Street, Sannadhi Street (State Bank Area) Pittalavari Street, Car Street Castern Side, Temple Premises (Gnest House Areas),Ashramam Soroundings, Boodidamitta, Baradwaja, ST Colony Thoofan Centre, Water Workers Colony, Nirmitta Kendra.
5	5		Siddulugari Street, Town Bank Area, Oterikalava West (Polaswamy Vari Street) fish Market Street, Sardar Street, Santhamydanam, Veternary Hospital Area, Mandivari Street, Jetty Palem, Durgamma Thippa Municipal Pump House Area, and P.W.D. Office Area, Seavergers Colony, ST Colony,
6	6		Prakasam Street (South), Kothapeta Petrol Bunk Area, Nagulagunat Gandhi Street, Narada Pushkarini sorrounding Area syndicae Bank and Theaters area, Municipal School and shopping complex and Police Station Urban Areas.
7	7		Marati Palem, Imam Street, Janda Streeet, Vaishnava Koneru (north side) Dakshina Kailasa Nagar, Nagarchi Palem, Z.P. Girls High School surrounding Areas, Nagulagunta and Prasasam Street,
8	8		Hara Hara Bavi area, Kothapetta, Brahmana Street, Kothapetta Gandla Street I & II, Ankalamma Gudi Premises, Dakshina kailasa Nagar(North), Santhiniketan School Area, Prakasam Street, Kaikala Street- I & II, Rural Police Station Premises
9	9		Aaruvela Vari Street, MutharasiPalem, Kamsali Street, Bahadurpet, Gandla Street, Gopalavanam, Naidu Buildings Upper Street, MRO Office Area
10	10		Gajendra Nagar sourruding Area, Salipetta and Padmasalipetta Area, Lankamitta Area
11	11		Vaddipalem, K.V.Street, Boddrchavidi Street,
12	12		Sunnapu Harijanawada, Nakka Harijanawada, Kummara Street, Sajjavari Street, Chamundeswari Street, Agraharam, Kanaparthi Road (Sorrending Area)
13	13		Puthalapatu Naidupetta Road, Bhaskarpetta, Agraharam, Chakali Street, Weavers Colony,
14	14		Kanaparthi Road West, Kami H / W, Jaibrind Puram, Kagithala Harijanawada, V.M.Palli
15	15		Western Side of the Project Road, B.P.Agraharam Eastern Side, B.P.Agraharam, Western Side , A.M.Puttoor, SRN Colony Extension (North Side), Project Street, ST Colony and Eastorn Side of the Project Street, Isukadibbalu.
16	16		Chithilane, OSSr School Soroundings, Berivarithota, Ponnalamma Gudi Street, Municipal, Libranay Soroundings, and Sree Ram Nagar Colony. Dargamitta and its Soroundings.
17	17		Sundara Raja Nagar, Mittakandriga, Sardar Street, Raja Nagar, Balaji Society Colony, A.P.Housing Board Colony, Soroundings of Tourism Hote. Gopalakrishna Reddy Colony, Ayyangari Colony, Mittakandriga, Yanadi Colony.

ANNEXURE-II
(See Rule-4)

List of Areas Prohibited for High Rise Buildings

Sl. No	Ward No.	Block No.	Name of the Locality / Area

1	2	3	4
1			All the areas as per Annexure-I

TIRUPATHI MUNICIPAL CORPORATION			
ANNEXURE-I (See Rule-4)			
List of Old/ Existing Built-Up Areas/ Congested Areas/ Settlement/ Gram Khantam/ Abadi			
Sl.No.	Ward No.	Block No.	Name of the Lociality / Area
1	2	3	4
1	1	36892 To 1-1-49/A	Beri Street
2	1	18264 To 33970	Beri Street
3	1	1-2-93/A To 1-2-117	Prakasam Road
4	1	1-2-118 To 1-2-118/F9	Prakasam Road
5	1	1-2-118/F10 To 1-2-144	Prakasam Road
6	1	1-6-600 To 1-6-790	Indira Nagar
7	1	1-5-509 To 1-5-572	Balaji Colony
8	1	1-5-576 To 1-5-582	Balaji Colony
9	1	36898 To 34706	S.V. University &Padmavathi Guest House Areas
10	1	35071 To 1-7-101A	Veterinary, Agricultural Universities Area
11	1	1-7-102 To 1-7-117/A	Veterinary, Agricultural Universities Area
12	1	1-7-118 To 1-7-299/B	S.V. University Area, Prakash Nagar Quarters
13	1		N.C.C Nagar
14	1		B.P.Tank
15	1	1-2-145 To 1-2-275/A	(Municipal Quarters)
16	1	1-3-276 To 1-3-291	Prakasam Road, Police Quarters
17	1	1-4-345 To 1-4-473/P	P.P.Chavadi Street
18	1	1-4-473/1 To 1-4-493	Kummara Thopu
19	1	1-4-494 To 1-4-494/62/A	Uttagunta (Hameed Nagar)
20	1	1-5-573 To 1-5-575/A	Balaji Colony
21	1	1-5-583 To 1-5-599/O	Balaji Colony
22	1	1-3-292 To 1-3-337	P.P.Chavadi Street
23	2	2-2-232,232A To School	Salivahana Nagar
24	2	36923 To 2-1-76/B	Kola Street
25	2	28157	Kodandarama Swamy Temple
26	2	28522 To 2-1-153	Kola Street
27	2	2-2-154 To 2-2-231	Chinthakayala Street
28	2	2-2-237 To 2-2-348	Chinthakayala Street
29	2	2-1-76/A To 2-1-76/Z	Chinnagunta
30	2	2-1-76/1 To 2-1-76/57	Chinnagunta
31	2	2-2-235/1 To 2-2-235/15	Chinnagunta
32	2	2-2-235/A,B	Chinnagunta
33	2	2-2-236	S.T. Office Chinnagunta
34	2	2-2-236/11 To ®	Chinnagunta
35	2	2-2-233,234,235	Municipal Quarters
36	2	2-3-349 To 2-3-391/A	K.V. layout
37	2	36951 to 43160	School Street
38	2	43526 to 19055	Chambadhi Street
39	2	19421 to 28917	Pogathota Street
40	2	29284 to 3-4-124	Giddangi Street
41	3	3-5-125 to 3-5-139,166	Adrathi Sandhu
42	3	3-6-140 to 3-6-165	Katikarangadi Street
43	3	3-6-166/A to 3-6-194	Katikarangadi Street
44	3	3-7-195 to 3-7-273	Bestha Street
45	3	3-7-274 to 3-8-330	Kummaramitta Street
46	4	4-1-1 to 4-1-206	Patnool Street
47	4	4-2-207 to 4-2-294	Gaju Street
48	4	4-2-346 to 4-3-360	Gaju Street
49	4	4-3-762 to4-3-772/C,	Giripuram
50	4	4-4-147 to 4-4-148/6	Nehru Nagar
51	4	4-4-147/B1 to 4-4-147/B44	Narayana Vihar Apartment
52	4	4-4-147/G to 4-4-147/G19	Akil Apartment
53	4	4-4-147/G1 to 4-4-147/H5	Vaishnavi Apartment
54	4	4-4-1061/B to 4-4-1125/B	Bommagunta
55	4	4-8-1 to 4-8-268/A	N.C.B. Colony
56	4	4-4-147A,B to 4-4-147F	Narayanavihar Shopping Complex
57	4	4-4-728 to 4-4-840/B	Nehru Nagar
58	4	4-7-1 to 4-7-29	Ramakrishna Puram

59	4	4-7-1/1 to 4-7-84	TUDA Apartment
60	4	4-4-861 to 4-4-911	Nehru Nagar
61	4	4-4-912 to 4-4-957	Nehru Nagar
62	4	4-4-957/A to 4-4-1021	Nehru Nagar
63	4	4-4-841 to 4-4-860	Nehru Nagar
64	4	4-4-1047A IS Mahal to 4-4-1047/C15	IS Mahal Back side
65	4	4-6-1 to 4-6-77/A	Reservoir Colony
66	4	4-6-4 to 4-6-5/B	R.S.V.P.
67	4	4-4-613 to 4-4-727	Nehru Nagar
68	4	4-4-503 to 4-4-612	Nehru Nagar
69	4	4-4-1022 to 4-4-1061/A	Nehru Nagar
70	4	4-2-295 to 4-2-336	Gaju Street
71	4	4-3-337 to 4-3-345	Giripuram
72	4	4-3-361 to 4-3-361/38	Konda Residency
73	4	4-3-362 to 4-3-502/A	Giripuram
74	4	4-3-773 to 4-3-794/E	Giripuram
75	4	4-3-786 to 4-3-786/4	Bhargavi Apartment
76	4	4-3-786/C1 to 4-3-786/C16	Bhargavi Apartment
77	4	4-3-786/D1 to 4-3-786/D20	Rajesh Apartment
78	4	4-5-1126 to 4-5-1253/A	Giripuram
79	4	4-3-792 to 4-3-792/12	Vijaya Residency
80	5	5-1-50 to 5-1-106	S.D. Road
81	5	5-2-107 to 5-2-205A	Anantha Street
82	5	5-3-206 to 5-3-248	Gandla Mitta Street
83	5	5-4-249 to 5-4-286	Vijayalakshmi Street
84	5	5-1-1 to 5-1-20	S.D.Road
85	5	5-6-1 to 5-6-71	SVIMS,
86	5	5-5-327 to	Bharathiya Vidhya Bhavan
87	5	5-1-21 to 5-5-338	S.D.Layout
88	5	5-5-356 to 5-1-46	S.D.Road
89	5	5-5-326/C/101 to 5-5-429	SanjaiGandhi nagar
90	5	5-5-326/C/111	Ramakrishna Paradise
91	1	1-1-1 to 1-1-49/A	Beri Street
92	1	1-1-50 to 33970	Beri Street
93	1	1-2-93/A to 1-2-117	Prakasam Road
94	1	1-2-118 to 1-2-118/F9	Prakasam Road
95	1	1-2-118/F10 to 1-2-144	Prakasam Road
96	1	1-6-600 to 1-6-790	Indira Nagar
97	1	1-5-509 to 1-5-572	Balaji Colony
98	1	1-5-576 to 1-5-582	Balaji Colony
99	1	1-7-1 to 34706	S.V. University &Padmavathi Guest House Areas
100	1	1-7-96 to 1-7-101A	Veterinary, Agricultural Universities Area
101	1	1-7-102 to 1-7-117/A	Veterinary, Agricultural Universities Area
102	1	1-7-118 to 1-7-299/B	S.V. University Area, Prakash Nagar Quarters
103	1		N.C.C Nagar
104	1		B.P.Tank
105	1	to 1-2-275/A	(Municipal Quarters)
106	1	1-2-145 to 1-3-291	Prakasam Road, Police Quarters
107	1	1-3-276 to 1-4-473/P	P.P.Chavadi Street
108	1	1-4-345 to 1-4-493	Kummara Thopu
109	1	1-4-473/1 to 1-4-494/62/A	Uttagunta (Hameed Nagar)
110	1	1-4-494 to 1-5-575/A	Salivahana Nagar
111	1	1-5-573 to 1-5-599/O	Balaji Colony
112	1	1-5-583 to	Balaji Colony
113	1	to 1-3-337	
114	1	1-3-292 to School	P.P.Chavadi Street
115	2	2-2-232,232A to 2-1-76/B	Salivahana Nagar
116	2	2-1-1 to 28157	Kola Street
117	2	to 2-1-153	Kodandarama Swamy Temple
118	2	2-1-78 to 2-2-231	Kola Street
119	2	2-2-154 to 2-2-348	Chinthakayala Street
120	2	2-2-237 to	Chinthakayala Street
121	2	to 2-1-76/Z	
122	2	2-1-76/A to 2-1-76/57	Chinnagunta
123	2	2-1-76/1 to 2-2-235/15	Chinnagunta

124	2	2-2-235/1 to 2-2-235/A,B	Chinnagunta
125	2	to S.T. Office	Chinnagunta
126	2	2-2-236 to ®	Chinnagunta
127	2	2-2-236/11 to	Chinnagunta
128	2	2-2-233,234,235 to 2-3-391/A	Municipal Quarters
129	2	2-3-349 to 43160	K.V. layout
130	3	3-1-1 to 19055	School Street
131	3	3-2-19 to 28917	Chambadhi Street
132	3	3-3-53 to 3-4-124	Pogathota Street
133	3	3-4-80 to 3-5-139,166	Giddangi Street
134	3	3-5-125 to 3-6-165	Adrathi Sandhu
135	3	3-6-140 to 3-6-194	Katikarangadi Street
136	3	3-6-166/A to 3-7-273	Katikarangadi Street
137	3	3-7-195 to 3-8-330	Bestha Street
138	3	3-7-274 to 4-1-206	Kummaramitta Street
139	4	4-1-1 to 4-2-294	Patnool Street
140	4	4-2-207 to 4-3-360	Gaju Street
141	4	4-2-36 to 4-3-772/C,	Gaju Street
142	4	4-3-762 to 4-4-148/6	Giripuram
143	4	4-4-147 to 4-4-147/B44	Nehru Nagar
144	4	4-4-147/B1 to 4-4-147/G19	Narayana Vihar Apartment
145	4	4-4-147/G to 4-4-147/H5	Akil Apartment
146	4	4-4-147/G1 to 4-4-1125/B	Vaishnavi Apartment
147	4	4-4-1061/B to 4-8-268/A	Bommagunta
148	4	4-8-1 to 4-4-147F	N.C.B. Colony
149	4	4-4-147A,B to 4-4-840/B	Narayanavihar Shopping Complex
150	4	4-4-728 to 47215	Nehru Nagar
151	4	4-7-1 to 30779	Ramakrishna Puram
152	4	4-7-1/1 to 4-4-911	TUDA Apartment
153	4	4-4-861 to 4-4-957	Nehru Nagar
154	4	4-4-912 to 4-4-1021	Nehru Nagar
155	4	4-4-957/A to 4-4-860	Nehru Nagar
156	4	4-4-841 to 4-4-1047/C15	Nehru Nagar
157	4	4-4-1047A IS Mahal to 4-6-77/A	IS Mahal Back side
158	4	4-6-1 to 4-6-5/B	Reservoir Colony
159	4	4-6-4 to 4-4-727	R.S.V.P.
160	4	4-4-613 to 4-4-612	Nehru Nagar
161	4	4-4-503 to 4-4-1061/A	Nehru Nagar
162	4	4-4-1022 to 4-2-336	Nehru Nagar
163	4	4-2-295 to 4-3-345	Gaju Street
164	4	4-3-337 to 4-3-361/38	Giripuram
165	4	4-3-361 to 4-3-502/A	Konda Residency
166	4	4-3-362 to 4-3-794/E	Giripuram
167	4	4-3-773 to 4-3-786/4	Giripuram
168	4	4-3-786 to 4-3-786/C16	Bhargavi Apartment
169	4	4-3-786/C1 to 4-3-786/D20	Bhargavi Apartment
170	4	4-3-786/D1 to 4-5-1253/A	Rajesh Apartment
171	4	4-5-1126 to 4-3-792/12	Giripuram
172	4	4-3-792 to 5-1-106	Vijaya Residency
173	5	5-1-50 to 5-2-205A	S.D. Road
174	5	5-2-107 to 5-3-248	Anantha Street
175	5	5-3-206 to 5-4-286	Gandla Mitta Street
176	5	5-4-249 to 43952	Vijayalakshmi Street
177	5	5-1-1 to 26059	S.D.Road
178	5	5-6-1 to 5-5-338	SVIMS,
179	5	16923	Bharathiya Vidhya Bhavan
180	5	5-5-327 to 5-5-429	S.D.Layout
181	5	5-1-21 to 5-5-326/C/111	S.D.Road
182	5	5-5-356 to 5-5-326/c/211	SanjaiGandhi nagar
183	5	5-5-326/C/101 to 5-5-326/c/311	Ramakrishna Paradise
184	5	5-5-326/c/201 to 5-5-326/c/411	Ramakrishna Paradise
185	5	5-5-326/c/301 to 5-5-326/c/511	Ramakrishna Paradise
186	5	5-5-326/c/401 to 5-5-326/c9	Ramakrishna Paradise
187	5	5-5-326/c/501 to 5-5-326	Ramakrishna Paradise
188	5	5-5-326/c1 to 5-5-355/2	Ramakrishna Paradise
189	5	5-5-287 to 18019	S.D. Layout
190	5	5-5-339 to 5-5-52/B9	S.D. Layout
191	5	5-1-47 to 31200	S.D. Layout
192	5	5-5-52 to 6-2-105	Sirigiri Towers

193	6	6-2-74 to 6-2-107	T. Nagar
194	6	6-2-86 to 6-2-130	T. Nagar
195	6	6-2-106 to 6-2-133	T. Nagar
196	6	6-2-108 to 6-2-159/B	T. Nagar
197	6	6-2-130/A to 6-2-173/A	T. Nagar
198	6	6-2-134 to 6-3-184	T. Nagar
199	6	6-2-160 to 6-3-260	T. Nagar
200	6	6-3-174 to 6-3-296	Manchala Street
201	6	6-3-185 to 6-3-317	Manchala Street
202	6	6-3-261 to 6-3-328	Manchala Street
203	6	6-3-297 to 6-4-394	Manchala Street
204	6	6-3-318 to 6-4-441	Manchala Street
205	6	6-4-329 to 6-5-483/B	Gali Street
206	6	6-4-395 to 6-6-536/A	Gali Street
207	6	6-5-442 to 6-1-C/26	KalikammaGudi Street
208	6	6-6-483/C to 6-8-758	KalikammaGudi Street
209	6	6-1-C/1 to 6-8-787/2	Haridwara Colony
210	6	6-8-750 to 45455	Sanjeevaiah nagar
211	6	6-8-759 to 6-12-17/D	Sanjeevaiah nagar
212	6	6-12-5F to 6-1-1J/47	K.B.Layout
213	6	6-12-2B2 to	K.B.Layout
214	6	6-1-1J to 6-1-2L/15	Haridwara Colony
215	6	6-1-1 missed to 6-1-53/4	Haridwara Colony
216	6	6-1-1/L to 6-10-132	Journalist Colony and
217	6	6-10-157	6-1-B1 to 6-1-1B/13
218	6	6-1-3 to 6-10-243/1	R.S. Garden
219	6	6-10-1 to 6-10-356/A	Singalagunta
220	6	6-10-133 to 6-10-438A	Singalagunta
221	6	6-10-158 to 6-12-21/C	Singalagunta
222	6	6-10-244 to 6-12-7/A	Singalagunta
223	6	6-10-357 to 6-12-15/B	Singalagunta
224	6	6-12-21 to 6-12-1/A	K.B. layout
225	6	6-12-6 to 11121	K.B. layout
226	6	6-12-14 to 6-12-5/M	K.B. layout
227	6	6-12-1 to 6-12-12/E	K.B. layout
228	6	6-12-7 to 6-12-3/B	K.B. layout
229	6	6-12-4 to 6-8-814	K.B. layout
230	6	6-12-12 to 40330	K.B. layout
231	6	6-12-3 to 6-1-2K16	K.B. layout
232	6	6-8-788 to 3A	Back side of church
233	6	6-1-64/A42	Sanjeevaiah Nagar
234	6	6-1-3 to 6-1-296	Haridwara Colony
235	6	6-1-2K2 to 6-7-621	Haridwara Colony
236	6	6-1-2N/B to 6-7-647	Haridwara Colony
237	6	6-1-64 to 578	Pachigunta V.R. Nagar
238	6	6-1-67 to	V.R. Nagar
239	6	6-7-550 to 6-11-205/c	Sripuram Colony
240	6	6-7-621/A to 6-11-328	Sripuram Colony
241	6	361 to 21714	TTD Quarters
242	6	B,C,D,E,F Type all quarters to 6-14-66/D	TTD Quarters
243	6	6-11-1 to 6-8-992	Chennareddy Colony
244	6	6-11-206 to 6-8-1068	Maruthi Nagar
245	6	6-13-1 to 6-8-1113	A.B. Colony – 1
246	6	6-14-1 to 6-8-1224	A.B. Colony – 2
247	6	6-8-901 to 6-8-1255	N.G.O.s Colony
248	6	6-8-993 to 6-9-1277	N.G.O.s Colony
249	6	6-8-1068/1 to 6-9-1367	N.G.O.s Colony
250	6	6-8-1114 to 6-9-1389/A	N.G.O.s Colony
251	6	6-8-1225 to 30848	N.G.O.s Colony
252	6	6-9-1256 to 6-7-549	A.P.H.P.Colony
253	6	6-9-1278 to 360	A.P.S.R.T.C. A.P.H.B. Colony
254	6	6-9-1368 to 612	Ex. Military Colony
255	6	6-15-6 to 6u77	A.P.H.B.Colony
256	6	6-7-539 to	Sripuram Colony
257	6	1 to 7-6-263	TTD D Type Quarters
258	6	Vinayaka nagar - 579 to 17715	TTD D Type Quarters
259	6	Vinayaka nagar to 22464	TTD D Type Quarters
260	6	Vinayaka nagar to 7-3-115	Harekrishna Road North side

			Quarters
261	7	7-6-216 to 7-4-132/h	Mitta Street
262	7	7-1-1 to 7-5-215/A	R.N. Mada Street
263	7	7-2-49 to 7-6-333/F	R.E.Mada Street
264	7	7-3-62 to 8-1-117	R.S. Mada Street
265	7	7-4-116 to 8-1-224	R.Sannidhi Street
266	7	7-5-133 to 8-3-351	Konka Street
267	7	7-6-264 to 8-4-381	Mitta Street
268	8	8-1-1 to 8-5-542	Bazzar Street
269	8	8-1-132 to 8-1-131/B	Bazzar Street
270	8	8-3-258 to 8-2-257	New Street
271	8	8-4-352 to 8-2-238	Gajula Street
272	8	8-5-382 to 8-1-120	Panta Street
273	8	8-1-121 to 18507	Bazzar Street
274	8	8-2-239 to 9-2-77/A	Chinna Bazzar Street
275	8	8-2-225 to 9-3-171/A	Chinna Bazzar Street
276	8	8-1-118 to 30225	Chinna Bazzar Street
277	9	9-1-1 to 10-2-114/C	G.M.Street
278	9	9-2-51 to 10-2-188/A	G.M. Lane
279	9	9-3-78 to 10-3-208/A4	Porla Street
280	10	10-1-1 to --	Akuthota Street
281	10	10-2-82/A to 10-4-239	T.K. Street
282	10	10-2-146 to 10-5-268	Theethakatta Street
283	10	10-3-208/A to 10-6-281	Kotakommla Street`
284	10	10-3-208/B to 10-7-321	Kotakommala Street
285	10	10-4-232233 to 10-8-330	Muduru Sandhu
286	10	10-5-240 to 10-9-354	Doddapuram Street
287	10	10-6-269 to 10-10-375/A	Giridhardas Lane
288	10	10-7-282 to 10-11-390A	Nadamuni Street
289	10	10-8-322 to 10-12-439/B1	Tilak Road
290	10	10-9-331 to 10-4-231/A	Jaganadhapuram
291	10	10-10-355 to 10-2-138/End	Jagannadhapuram
292	10	10-11-376 to 10-2-145/A	
293	10	10-12-391 to 10-3-206/M11	Jagannadhapuram
294	10	10-4-224 to 10-3-207/E	Muduru Sandu
295	10	10-2-138 to 10-3-208/E	Theethakatta Street
296	10	10-2-139 to	Theethakatta Street
297	10	10-3-189 to 10-3-208/4	Kotakommala Street
298	10	10-3-207 to 10-3-223	Kotakommala Street
299	10	10-3-208/C to 10-12-461/A	Kotakommala Street
300	10	10-3-208 to 10-13-476/ABCD	Kotakommala Street
301	10	10-3-208/1 to 10-13-571	Kotakommala Street
302	10	10-3-209 to	Kotakommala Street
303	10	10-12-440 to 10-13-581/E1	Jagannadhapuram
304	10	10-13-461/B to 10-14-579	Jagannadhapuram
305	10	10-13-477 to 10-14-587/A	Reddy & Reddy Colony
306	10	10-13-581 to 10-15-189/End	Reddy & Reddy Colony
307	10	10-13-581/A to 10-2-137	Reddy & Reddy Colony
308	10	10-14-575 to 11-1-196	Tilak Road
309	10	10-14-582 to 11-1-220	Mosque Road
310	10	37179 to 11-1-298	Kotakommala Layout
311	10	10-2-115 to 11-1-331	KalikammaGudi Street
312	11	37196 to 12-3-227/A	Gandhi Road
313	11	11-1-197 to 12-3-242/A	Gandhi Road
314	11	11-1-221 to 12-3-282	Gandhi Road
315	11	11-1-299 to 12-3-335	Gandhi Road
316	12	12-3-211 to 12-4-386	Tilak Road
317	12	12-3-228 to 12-4-523/A	Sunnapu Street
318	12	12-3-243 to 12-5-529/A	Sunnapu Street
319	12	12-3-283 to 12-5-569/C	Sunnapu Street
320	12	12-4-336 to 12-5-553554	Bandla Street
321	12	12-4-391 to 12-4-390	Bandla Street
322	12	12-5-524 to 12-3-210	S.K.D. Nagar
323	12	12-5-555 to	S.K.D. Nagar
324	12	12-5-529/B to 13-7-939/G5	S.K.D. Nagar
325	12	12-4-387 to 13-7-939G6	Bandla Street
326	13	37226 to 13-7-939/H2/B	Yadava StreetTilak RoadNimmakayala Street
327	13	to 13-7-939/H2/C3	

328	13	13-7-939/G1 to 13-7-943H	Korlagunta
329	13	13-7-939/GA to 13-7-964/A	Korlagunta
330	13	13-7-939/H2/A to 13-3-392/2	Korlagunta
331	13	13-7-939/H2/C1 to	Korlagunta
332	13	13-7-943G to 13-7-822	Korlagunta
333	13	13-7-954 to 13-7-938/B	Korlagunta
334	13	13-3-392/1 to	Municipal Office Shopping Complex
335	13	13-5-531/A2, 531/A11, 531/2A, 531/3A, 531/B, B1/1, 531B1/2, 531B1, 531B1/2, 531B/3, 531B2, 531BB1/4, 531B1/5, 531BB1/6, 531B1/7, 531B1/8, 531B1/9, 531BB3, B1/10, 531/2, 531/2/A, 531/2/B, 531/2B1, 531A3, 531/3A, 531/3A, 531/D, 531/A, 531/3, 531/3/1, 531/3C, 531/3D, 531/3E, 531/4, 531A4/1, 531/4A/1, 531/5, 531/5A, 531/5/1, 531/5/1/1, 531/5A1, 531/A5/1, 531/A5/2, 531/5A/3, 531/5A/6, 531C, 531A5, 531A4, 531/A5, 531/5/D2, 531/5/D3, 531/5/D4, 531/5/D5, 531/D8, 531D11, 531/D12, 531D13, 531/D14 to 13-7-942;and 13-7-943A, 943B, 943C, 943D, 943E, 943E1, 943F, 943F1, 943F2, 943F3, 943F4; and 13-7-953A; and 13-1-80B1	Tata Nagar
336	13	13-7-772 to 13-1-80B25	Vinayaka Nagar
337	13	13-7-823 to 13-2-247C	Korlagunta
338	13	13-7-939/1A, 939/1A, 939A1, 939A, 939A2, 939A1, 939B, 939C, 939D, 939E, 939E1, 939F, 939F1, 939G, 939G6, 939G7, 939G8, 939H, 939H, 939H1/2, 939H1/3, 939/HA, 939H2, 939H4, 939H2/1, 939H2/C, 939H2/C3, 939H2/1D, 939H2/D, 939/8, 939/7, 939/9, 939/10, 939/11, 939/11A, 939H5, 939H6, 939H3, 939H3/1, 939/1, 939/2, 939/3 to 13-3-343F	Korlagunta
339	13	13-7-940 to 13-3-344/54	Korlagunta
340	13	13-7-943 to 13-3-344/59	Korlagunta
341	13	13-7-944 to 13-3-344/70	Korlagunta
342	13	13-1-80B to 13-3-345B9/A, 345C	Peddakapu Street
343	13	13-1-80B2 to 13-3-345/B15	Peddakapu Street
344	13	13-2-225 to 391A1, 391A2, 391A3, 391B	Chinnakapu Street
345	13	13-3-327 to 13-3-392A2	Nawab Pet
346	13	13-3-344 to 13-3-393/B11	Jabbar layout
347	13	13-3-344/55 to 13-3-392D2, 393,393A	Jabbar layout
348	13	13-3-344/60 to 13-4-525	Jabbar layout
349	13	13-3-345 to 13-8-312C	Gangamma Gudi Street
350	13	13-3-345B10 to 13-3-401/C	Gangamma Gudi Street
351	13	13-3-391A to	Municipal Vegetable Market Area
352	13	13-3-392/A to 13-3-326	Tilak Road
353	13	13-3-392B1 to 13-5-531 & 531A, 13-5-531D5, 531D6, 531D7, 531/5E, 531/5E1, 531/5F, 531/5F2, 531/5F3, 531/5F4, 531/5F4/4, 531/5F5, 531/C, 531/C1/1, 531/C1, 531/C2, 531/C3, 531/5B, 531/5B1, 531/6, 531/7, 531/8, 531/9, 531/9A, 531/9B, 531/9A, 531/10, 531/10A, 531/10b, 531/10C, 531/11, 531/12/1, 531/11A1, 531/12, 531/12a, 531/12B, 531/12C	Tilak Road
354	13	13-3-392C to 13-5-531/18	Tilak Road
355	13	13-4-402 to 13-5-571D	Mallaiahgunta Katta
356	13	13-8-1 to 13-6-600/44/162B	Tataiahgunta
357	13	13-3-394 to 13-6-600/53	Tilak Road
358	13	13-3-275A, 275A2,275B, 275B1, 275B2, 275B3 to 13-6-615, 615A, 615A1, 615A2, 615A3, 615B, 615C, 615F, 615G, 615I, 615J, 615J1, 615K, 615M, 615H	Nawab Pet

359	13	13-3-276 to	Nawab Pet
360	13	13-5-526 to 13-1-80,80A,81	Tata Nagar
361	13	13-5-531/1B to 13-1-224	Tata Nagar
362	13	13-5-532 to 13-2-275	Tata Nagar
363	13	13-6-572 to 13-6-600/44/204	Peddakapu layout
364	13	13-6-600/45 to 13-6-615H49	Peddakapu layout
365	13	13-6-601 to 13-6-769	Peddakapu layout
366	13	to 13-6-771/14	
367	13	13-1-1 to 13-6-771/A13	Peddakapu Street
368	13	13-1-82 to	Peddakapu Street
369	13	13-2-248 to 14-1-47;	Chinnakapu Street
370	13	13-6-600/44/163 to 14-1-115/A3	Peddakapu Layout
371	13	13-6-615H1 to 14-1-83	Peddakapu Layout
372	13	13-6-616 to 14-2-222	Peddakapu Layout
373	13	13-6-770 to 14-3-306/B5/5	Peddakapu Layout
374	13	13-6-771A1 to 14-3-300/1	Peddakapu Layout
375	14	to 14-1-111	
376	14	14-1-1 to 14-2-127/B	Nehru Street
377	14	14-1-112 to	Nehru Street
378	14	14-1-48 to 15-1-8/A to 9 to23	Nehru Street
379	14	14-2-128 to 15-1-74	T.P. Area
380	14	14-3-301 to 15-2-142	D.R. Mahal Road Green Park Appartment
381	14	14-3-223 to 15-3-208	Konetikatta Street
382	14	14-1-84 to 111 to 15-4-252	(Railway Station Road)
383	14	14-2-116 to 15-5-276	T.P. Area
384	14	to 16-1-134	
385	15	15-1-1 to 16-1-222	G.Car Street
386	15	15-1-24 to 16-1-286	G.Car Street
387	15	15-2-75 to 16-2-308/A	G.S. Mada Street
388	15	15-3-142/A to 16-3-351	G. Sannidhi Street
389	15	15-4-209 to 16-4-377/B	G.N. Mada Street
390	15	15-5-253 to 16-5-416	Marrimanu Sandhu
391	16	16-1-1 to 16-1-153	Karnala Street
392	16	16-1-154 to 16-6-465	Karnala Street
393	16	16-1-223 to 17-1-64/C	Karnala Street
394	16	16-2-287 to 17-2-154	Karnala Street
395	16	16-3-309 to 17-3-286/B	Karnala Street
396	16	16-4-352 to 17-4-305	Kasthuribai Sandu
397	16	16-5-378 to 17-5-334/A	Kasthuribai Sandu
398	16	16-1-135 to 17-6-445	Karnala Street
399	16	16-6-417 to 18-1-401/B	Karnala Layout
400	17	17-1-1 to 18-1-464	Aravapalli Street
401	17	17-2-65 to 69 to 18-1-560A	Poola Street
402	17	17-2-70 to 18-1-587/505	
403	17	17-3-154/1 to 18-1-733A	Poola Street
404	17	17-4-287 to 18-1-744	Avilala Street
405	17	17-5-305/A to 18-1-798	Avilala Street
406	17	17-6-335 to 66/O,66/R,66N,66M,66/M1,66/K,66/K1, 66K2, 66/L8, 66/L6, 66/L5, 66/L3, 66/L2, 66/L1, 66/S	Poola Thota
407	18	18-1-268 to 18-1-66/A5	Bhavani Nagar
408	18	18-1-451 to 18-1-90B	Bhavani Nagar
409	18	18-1-552 to 18-1-66/1, 66/1A, 66/2, 66/1B, 66/1C, 66/2m 66/3m 66/3Am 66/3C, 66/3D, 66/3E	Bhavani Nagar
410	18	18-1-586 to 90/9/103 (18-1-91 No door No.)	Bhavani Nagar
411	18	18-1-609 to 18-1-94/1	Bhavani Nagar
412	18	18-1-735 to 18-1-99/B	Bhavani Nagar
413	18	18-1-747 to 18-1-267/D14	Bhavani Nagar
414	18	18-1-66 to 18-4-185	Bhavani Nagar
415	18	18-1-66A to 18-1-745/2	Bhavani Nagar
416	18	18-1-67 to 18-1-746/6A	Bhavani Nagar
417	18	18-1-66 to 18-1-734/C1	Bhavani Nagar
418	18	18-1-90/A1 to 18-4-81	Bhavani Nagar
419	18	18-1-92A to 18-6-427	Bhavani Nagar
420	18	18-1-90/A14 to 18-5-461A	Bhavani Nagar

421	18	18-1-100 to 18-1-800+810A	TTD Quarters, K.T.Road
422	18	18-4-99 to 18-8-65/D	Railway Colony
423	18	18-1-745 to 18-1-46J14, 46/G2, 18-1-46/F10,F13, 46/F14 and 66/E1	Bhavani Nagar
424	18	18-1-746 to 18-1-66/J1	Bhavani Nagar
425	18	18-1-734A to 18-7-9 to 18-7-56/304	Bhavani Nagar
426	18	18-4-1 to	Railway Colony
427	18	18-6-1 to 18-3-52/I	Sundaraiah Nagar
428	18	18-5-372 to 18-3-58/A,B,C,D/504	Sapthagiri Nagar
429	18	18-1-800 to 18-5-371	Bhavani Nagar
430	18	18-8-55 to	Madura Nagar
431	18	18-1-46/J1 to	Prasanth nagar
432	19	19-1-1 to 19-13-1/1-110	Chinthala Chenu
433	19	19-2-1 to 19-15-91	U.P.H. Wada & Srinivasa puram
434	19	19-2-61 to 19-13-83	Srinivasa Puram
435	19	19-3-10,13/D1,10/A, 3/D/2, 10B, 10/A1, 13/M, 13/M1, 13/M2, 13/M3, 13/M4, 14,13K, 13/H1,13/H2, to 19-3-1/B13/A	Santhi Nagar
436	19	19-3-1/D/2A2, D/2A,D1,C3,C3,D2/A15, 13/P,D11/F, D2/A12, D2/B10, D2/A11, D2/B12, D2/A9, D2/A10, D2/A3, D2/A4, D2/A5, D2/A6, D2/A7, C,A3, C, A1, A2/B, C4, A7, A, A2/A, A2/D,D2/F16, D3/E5, D3/E6, D3/E7, D3/E16, D2/F16, D2/F10, A4, A6/A, 6A1, 6A/10, A/5A, A/5A1, 5A2, 5A3, A5/C, A5/C1, 5/B,, 5/B1, A5, B, B9, B8/A2,B8, B8/A1, B/8A, H, A1, B3/B1, B2/A2, B3/A1, B2/A1, F, A3, B2/A5, A4, A1, B/2A, B/2A1, B2/2A2, to 19-3-1/B12/C	Santhi Nagar
437	19	19-3-1/B1/A1, B1/E1, 19-3-14/10, 2B,19-3-14,1,2,9,2A, 3,4, 2C, 6, 6B, 7, 18C, B13/D, 1C/10, 19-3-1/ B1/A, B2, B3, B/35, 1B, B/31, B32, B/49, B13, B11, B14, B1, B1/A, B, B15, B16, B8, B8/2, B4, B4/B, B4/CA, B4/D, B4/C, B4/E, 4D, B4/C1, B4/C3, 10/3, B7/A1, B7, B7/A,3, B7/A2, B8, B7/E1, B5/A,B7/C3, G7, B4,B5/2, B5/1, B5, B5/4, B7, B5/6A, B5/3A,B10, C, 19-3-10A,B19-3-1/D2/A1, D2/A3, C1/A2, C1/B2, C2/A, C1/A1, C1/B1, C1/A, C, C2, C3, C3, D/2B, D/2C, 19-3-2, 19-3-1, E, E1, E2, F2, F3, F4, F5, G, G2, G3, K, K1, K2, 2, K5, 1K, KA, 19-3-2/F2,B1, B9, F, F2, B9, F, F2, F3, E, E3, F2/B, A, C, D1, A, E4, E, E1, E, E3, F1, F1/A, G, F1/A20, G2/A, GA/1, GA/2, GA, G2, 3G, F1/B, F1, G,G, 19-3-3/D2, 2, 19-3-2/4, 2, 1, 4A, 3B, 3C, G6, G5, G3/A, G2, G4,G1, G5/F2, 19-3-5/F, F1, H, I, J, K1, K, G, C1, 19-3-2/G4/A, 2/G3, H, G to 19-3-1/B11/1	Santhi Nagar
438	19	19-3-3, A, B1, 8, 5, 19-3-2H2, H1,H2,H3, G3, G4, 19-3-3/2,1,3A, 3,19-3-5/C, 19-3-1/B5/3, B5/4, B6/3, B6/2, B6/1, G5/F, G3/E1, G3/E1, G6/F, 19-3-2/G/3C, G/B3, G/3A, 19-3-1/B5, 19-3-2/G, 19-3-1/G/3F, 19-3-2/H1,G/32C, G/3B, B5/4, G/4C, G3/E5, G3/E4, G3/E, G3/C1, G3/E1, G3/E3,19-3-2G/6A1, G6,G3, G/7A, G/7C, G9/A, G3/H, G/2F, G/6A, G/8C, G/8E, G7, G8/A, G8,G7/A, G9/A, G9, G/8D, 19-3-2, G/8B, G/A8, G2, G12/K, 19-3-5/D1/B, D1/A, D1, D1/3, D2, C4, K2, CA, CA, C2, C3,C5, C5/A, C6, C6/A1, C6/A2, J1, M, H, 19-3-2/H/2, H3, H4, 19-3-39, A,C,19-3-41, A, 19-3-42, 19-3-13/2, 19-3-13, 19-3-12/B,A1,A,B1, A, D,C, G1, C2, C3, C4, C5, 1A, 19-3-11/A1, A, 19-3-12/1,2, 19-	Santhi Nagar

		3-9, 19-3-12/1,2, 19-3-9, 19-3-10,19-3-12,19-3-11,B,B2, C, E, B1, B3, D, D1,19-3-7B, 19-3-7/A2, 19-3-7/B,B1, 19-3-8/B2, B1,B, E, F, E1, F1/A, F2,A, F3, 19-3-7/A, C1,C, D, D4, D1, D2, A, 19-3-6/A, 19-3-3/B, B1, 19-3-4/D, D1, C1/A, C, C5, C6, C8, C7, C1O, C2, A, A5, A6, 19-3-5/1, 5/1B, 5/1A5/1A/C, 19-3-13G/A, E, F1, F3, 19-3-41, A, to 19-3-1/B7/A	
439	19	19-9-3/A2 to 19-3-1/B12/C	Jaya Nagar
440	19	19-9-5 to 19-3-1/B/A7	Jaya nagar
441	19	19-9-11/1 to 19-3-1/B10/A3	Jaya Nagar
442	19	19-9-22/g3 to 19-3-1/B10/B3	Lakshmipuram
443	19	19-13-1 to 19-3-1/B/A5	Parvathi puram
444	19	19-13-4/1 to 19-3-1/B12/B	Lenin Nagar
445	19	19-13-1/1-1 to 19-3-1/B7/A2	Narayana Puram
446	19	19-15-1 to 19-3-1/B/A6	Pragathi Nagar
447	19	19-13-81 to 19-3-1/B12/A	Padmavathi Kalyana Mandapam
448	19	19-3-1/B4/C to 19-3-1/B12	
		19-3-1/B4/F to 19-3-1/B10/A3	
		19-3-1/4D to 19-3-1/E12/A1	
		19-3-1/B4/C1 to 19-3-1/B5/B	
		19-3-1/B4/C3 to 19-3-1/B6/E	Garudadri Nagar
		19-3-1/B5/D10 to 19-3-1/B10/C	
		19-3-1/B4/D16 to 19-3-1/B/A15	
		19-3-1/B6/A to 19-3-1/B/A8	
		19-3-1/B4/D6 to 19-3-1/B/A17	
		19-3-1/B4/D5 to 19-3-1/B7/A5	
		19-3-1/B4/D9 to 19-3-1/B7/A4	
		19-3-1/B4/D1 to 19-3-1/B/A11	
		19-3-1/B10/A2 to 19-3-1/B/A12	
		19-3-1/B1/A9 to 19-3-1/C6/20	
		19-3-1/B10/A3 to 19-3-3D	
		19-3-1/B6/E to 19-3-3/D1	
		19-3-1/B5/D1 to 19-3-3/D/A1	
		19-3-1/B5/D2 to 19-3-3/D2	
		19-3-1/C6/41 to 19-3-3/DA	
		19-3-1/B4/C to 19-3-3/K	
		19-3-1/B4/C4 to 19-3-3/K1	
		19-3-1/B6/A to 19-3-2/G3/B	
		19-3-1/B6/C to 19-3-3/K2	
		19-3-1/B6/D to 19-3-7/1	
		19-3-1/C6/46 to 19-3-7/A2	
		19-3-1/B6/C3 to 19-3-7/3C	
		19-3-1/B6/C2 to 19-3-7/4A	
		19-3-1/B5/1 to 19-3-7/A3	
		19-3-1/B5/A to 19-3-7/4C	
		19-3-1/B6/C6 to 19-3-7/4A	
		19-3-1/B6/C5 to 19-3-7/4C	
		19-3-1/B10 to 19-3-7/4A	
449	19	19-3-1/B10/A3 to 19-3-5/C2	
		19-3-1/B/A4 to 19-3-5/1	HARINATHA REDDY COLLEGE SIDE
		19-3-1/B8/D8 to 19-3-5/C1/A	
		19-3-1/B8/C to 19-3-5/C4/A	
		19-3-1/C5/A5 to 19-3-5/C1	
		19-3-1/C6/46 to 19-3-5/C	
		19-3-1/C7 to 19-3-5/C/1A	
		19-3-1/C8 to 19-3-5/C/1E	
		19-3-1/C9 to 19-3-5/C1/1A	
		19-3-1/C10 to 19-3-5/B2	
		19-3-1/C6/1 to 19-3-7/3	
		19-3-1/C6/2 to 19-3-7/4	
		19-3-1/C6/D to 19-3-7/3A	
		19-3-1/C6/D1 to 19-3-3/7	
		19-3-2/G10 to 19-3-3/7\A1	
		19-3-2/H11 to 19-3-3/7A	
		19-3-2/H19 to 19-9-3/E4	

		19-3-2/H39 to 19-9-3/E2	
		19-3-2/G3/J to 19-9-3/E5	
		19-3-2/G4/J1 to 19-9-3/E6	
		19-3-2/G4/M6 to 19-9-3/E10	
		19-3-2/G10/M2 to 19-9-3/EA	
		19-3-2/G4/J to 19-9-3/EB	
		19-3-2/G5/M to 19-9-22/G2	
		19-3-2/G4/M to 19-9-22/C	
		19-3-2/G10 to 19-9-22/1	
		19-3-2/G4/M5 to 19-9-22/B	
		19-3-2/G10 to 19-9-22/G	
		19-3-2/G12 to 19-9-11	
		19-3-2/E/12A to 19-9-11/A	
		19-3-2/C2/A6 to 19-9-11/B	
		19-3-5/C1 to 19-9-11/1	
		19-3-3/H5 to 19-9-11/2	
		19-3-3/H6/A to 19-9-11/3	
		19-3-3/H6 to 19-9-27/A6	
		19-3-3/D/B1 to 19-9-27/A7	
450	19	19-9-3/B4 to 19-9-27/B8	JAYA NAGAR
		19-9-3/A3 to 19-9-27/A8	LAXMI PURAM
		19-9-3/A3/G1 to to 19-9-27/A10	
		19-9-3/A3/G9 to 19-9-27/A1	
		19-9-3/A5 to 19-9-29/A1	
		19-9-3/A/5A to 19-9-29	
		19-9-3/A8 to 19-9-29/A	
		19-9-3/A6 to 19-9-29/D	
		19-9-3/A2 to 19-9-29/C	
		19-9-3/A/7A to 19-9-29/B1	
		19-9-3/A7 to 19-9-29/B	
		19-9-3/E5 to 19-9-18/C	
		19-9-3/F to 19-9-18/D	
		19-9-3/A8 to 19-9-18/F	
		19-9-3/A3 to 19-9-18/F1	
		19-9-3/A1 to 19-9-18/F2	
		19-9-3/1 to 19-9-18/FA	
		19-9-3/F3 to 19-9-28	
		19-9-3/1B to 19-9-28/1	
		19-9-3/6A to 19-9-28/3	
		19-9-3/4A to 19-9-8/1A	
		19-9-3/6 to 19-9-8/1	
		19-9-3/5 to 19-9-8/A	
		19-9-3/2 to 19-9-8/D	
		19-9-3/2A to 19-9-8/B	
		19-9-3/3 to 19-9-28	
		19-9-3/4 to 19-9-28/F	
		19-9-7/E/A1 to 19-9-28/G	
		19-9-5 to 19-9-28/H	
		19-9-5/A to 19-9-28/H1	
		19-9-5/G1 to 19-9-28/J	
		19-9-5/G2 to 19-9-28/H1/D	
		19-9-5/G3 to 19-9-28/C9	
		19-9-5/G5 to 19-9-28/H2/E	
		19-9-7 to 19-9-28/H1/B	
		19-9-7/3A to 19-9-28/H2/C	
		19-9-7/EA to 19-9-28/H/1A	
		19-9-7/E4 to 19-9-28/A	
		19-9-7/E3 to 19-9-28/1	
		19-9-6A to 19-9-29/3	
		19-9-6/A1 to 19-9-29/2	
		19-9-7/EA1 to 19-9-29/1A	
		19-9-7/C to 19-9-29/1	
		19-9-7/C7 to 19-9-29/4	
		19-9-7/1A to 19-9-29/9D	
		19-9-7/1 to 19-9-29/12A	
		19-9-7/6/A1 to 19-9-29/10D	
		19-9-6/A2 to 19-9-28/H3	
		19-9-6/2A to 19-9-28/H3/A	
		19-9-6/2C to 19-9-28/H2	

		19-9-6/A4 to 19-9-28	
		19-9-6/A5 to 19-9-28/2A	
		19-9-6/A3 to 19-9-28/2A/1	
		19-9-6/A6 to 19-9-28/6A	
		19-9-6/C6 to 19-9-28/6B	
		19-9-6/C7 to 19-11-46	
		19-9-6/B to 19-6-52/B	
		19-9-6/B3/A to 19-7-19A	
		19-9-6/B2/A to 19-9-28/H3	
		19-9-6//B2 to 19-3-40	
		19-9-6/B4 to 19-9-76	
		19-9-3/E7 to 19-4-8/H508 & 19-4-9/10	
		19-9-3/E8 to 19-3-13/G2	
		19-9-6/B1 to 19-3-12/E15	
		19-9-3/F to 19-3-12/G	
		19-9-3/A2 to 19-3-G1	
		19-9-3/F/A1 to 19-3-12/J	
		19-9-3/1/A3 to 19-3-12/J1	
		19-9-3/F/A2 to 19-3-12/J2	
		19-9-3/F/A3 to 19-3-12/J3	
		19-9-3/E1 to 19-3-12/J4	
		19-9-11/B1 to	
		19-9-3/E3 to 19-3-15 to 19-3-39/B	
		to 19-9-4	
		to 19-9-4/A1	
451	19	19-11-1 to 19-9-3/C	Saradha Nagar
452	19	19-6-17 to 19-9-3/E2	Govindaraja Puram
453	19	19-7-1 to 19-9-4/1	IInd Choultry Road
454	19	19-9-1 to 19-9-4/2	T.C. Road and Kennedi Nagar
455	19	19-3-15 to 19-9-4/A1	Old Renigunta Road T.C. Road
456	19	19-9-40 to 19-9-5	T.C. Road (old)
457	19	19-4-1 to 19-9-5A	STV Nagar, Raja Reddy Colony
458	19	19-3-12 to 19-9-5C	Kennedi Nagar
459	19	19-3-12E to 19-9-5/C1	T.C. Road
460	19	19-3-12E1 to 19-9-3A	T.C. Road
461	19	19-3-12G1 to 19-9-3/F2	Kasimgadda
462	19	19-3-12D to 19-9-3/F1	Kasimgadda
463	19	19-3-12C to 19-9-3/FA	Kennadi Nagar
464	19	19-3-12/E3 to 19-9-3/E1	Kennadi Nagar
465	19	19-3-12/E5 to 19-9-5/D	Saradha Nagar
466	19	19-3-12/E6 to 19-9-5/c2	Saradha Nagar
467	19	19-3-13/A1 to 19-9-22B	
468	19	19-3-13/A2 to 19-9-22/D5	Old Renigunta Road
469	19	19-3-13/2, 13A, 19-3-12/F1, 19-3-13/9I, 12/E1, E8, E10, E14 to 19-9-22/C	T.C. Road
470	19	19-9-1 to 19-9-22/G2	T.C. Road
471	19	19-9-1/1 to 19-9-22D	T.C. Road
472	19	19-9-1/A1 to 19-9-23	T.C. Road
473	19	19-9-1/A2 to 19-9-22/E2	T.C. Road
474	19	19-9-1/A to 19-9-22/D1	T.C. Road
475	19	19-9-1/B to	T.C. Road
476	19	19-9-1/C to	T.C. Road
477	19	19-9-1/4 to	T.C. Road
478	19	19-9-2A to 19-9-3/F1	T.C. Road
479	19	19-9-2/A2 to 19-9-3/G	T.C. Road
480	19	19-9-2/A4 to 19-9-7/D1	T.C. Road
481	19	19-9-3 to 19-9-7/D	T.C. Road
482	19	19-9-1/D to 19-9-7	Kennedi Nagar
483	19	19-9-1/E to 19-9-6/B	Kennedi Nagar
484	19	19-9-1F to 19-9-6A	Kennedi Nagar
485	19	19-9-1/D to 19-9-6B1	Kennedi Nagar
486	19	19-9-1/E to 19-9-6D	Kennedi Nagar
487	19	19-9-1/F to 19-9-6/D1	Kennedi Nagar
488	19	19-9-1G to 19-9-6/F1	Kennedi Nagar
489	19	19-9-1G to 19-9-6/F2	Kennedi Nagar
490	19	19-9-1/G1 to 19-9-6/F	Kennedi Nagar
491	19	19-9-2 to 19-9-6G	Kennedi Nagar
492	19	19-9-3/B to 19-9-6/G1	Kennedi Nagar
493	19	19-9-3/EB to 19-9-6/H	Kennedi Nagar

494	19	19-9-3/EA to 19-9-9A	Kennedi Nagar
495	19	19-9-3/F1 to 19-9-9B	Kennedi Nagar
496	19	19-9-3/F4 to 19-9-29/A1	Kennedi Nagar
497	19	19-9-3/F3 to 19-9-29/A	Kennedi Nagar
498	19	19-9-22/E2 to 19-9-28/H2	Kennedi Nagar & T.C. Road
499	19	19-9-22/D2 to 19-9-28/H/2A	Kennedi Nagar & T.C. Road
500	19	19-9-22/D2/A to 19-9-28/H3	Kennedi Nagar & T.C. Road
501	19	19-9-22 to 19-9-28/A3	Kennedi Nagar & T.C. Road
502	19	19-9-3/E2 to 19-9-28/A4	Kennedi Nagar & T.C. Road
503	19	19-9-24 to 19-9-28/A5	Kennedi Nagar & T.C. Road
504	19	19-9-25 to 19-9-49 TO 19-9-76	Kennedi Nagar & T.C. Road
505	19	19-9-3/G1 to	Kennedi Nagar & T.C. Road
506	19	19-9-3/H1 to	Kennedi Nagar & T.C. Road
507	19	19-9-3/H2 to	Kennedi Nagar & T.C. Road
508	19	19-9-3/G to	Kennedi Nagar & T.C. Road
509	19	19-9-3/5 to	Kennedi Nagar & T.C. Road
510	19	19-9-3/J1 to	Kennedi Nagar & T.C. Road
511	19	19-9-3/Z1 to	Kennedi Nagar & T.C. Road
512	19	19-9-3/7/2 to 19-4-9/D9	T.C. Road
513	19	19-9-3/D1 to 19-4-9/E	T.C. Road
514	19	19-9-3A to 19-4-9/D5	T.C. Road
515	19	19-9-3/A1 to 19-4-9/D3	T.C. Road
516	19	19-9-7/A to 19-4-9/D4	T.C. Road
517	19	19-9-7/B to 19-4-7/A1	T.C. Road
518	19	19-9-7/B3 to 19-4-7	T.C. Road
519	19	19-9-7/B1 to 19-4-7/A2	T.C. Road
520	19	19-9-7/B2 to 19-4-8/A	T.C. Road
521	19	19-9-7/B4 to 19-4-8/D1	T.C. Road
522	19	19-9-11 to 19-4-8/A1	T.C. Road
523	19	19-9-10 to 19-4-8/D1	T.C. Road
524	19	19-9-18 to 19-4-8/D	T.C. Road
525	19	19-9-18/A to 19-4-8	T.C. Road
526	19	19-9-18/A1 to 19-4-9/5	T.C. Road
527	19	19-9-18/A2 to 19-4-8/G	T.C. Road
528	19	19-9-29/A3 to 19-4-8H	T.C. Road
529	19	19-9-29/A/31 to 19-4-8H1	T.C. Road
530	19	19-9-29/AB/2 to 19-4-8/E	T.C. Road
531	19	19-9-29/A2 to 19-4-3/4C	T.C. Road
532	19	19-4-8/E9 to 19-10-11 1/B	
		19-4-8/E1 to 19-4-41/6	
		19-4-8/D to 19-4-250	
		19-4-8/C to 19-4-305	
		19-4-8/A to 19-4-360/A1	
		19-4-8/D/1A to 19-4-379/D	
		19-4-8/B to 19-13-71	
		19-4-9/C to 19-13-65	S.T.V. Nagar, Raja Reddy Colony
		19-4-9/C1 to 19-14-300/E	
		19-4-9/B to 19-12-205	
		19-4-9/D to 19-12-122	
		19-4-9/2 to 19-12-220	
		19-4-9/A to 19-12-246	
		19-4-9 to 19-12-400	
		19-4-9/B to 19-12-537	
		19-4-9/1 to 19-12-577	
		19-4-9/D to 19-12-602	
		19-4-9/D1 to 19-12-660	
		19-4-9/D2 to 19-12-416	
		19-4-9/D7 to 19-4-39/10B to 41	
533	19	19-10-1 to 19-4-148/10A	New Indira nagar
534	19	19-4-40 to 19-4-239	STV Nagar
535	19	19-4-240 to 19-4-292D	STV Nagar
536	19	19-4-293 to 19-4-334	STV Nagar
537	19	19-4-335 to 19-4-365/A	STV Nagar
538	19	19-4-366 to 19-4-393	TMC, STV Nagar Municipal School
539	19	19-13-70/A to 19-12-497	Electrical Sub Station
540	19	19-13-62 to 19-12-582	Kalyanamandapams
541	19	19-14-1 to 19-10-113	Raghavendra Nagar
542	19	19-12-1 to 19-4-9/11	Kesavayana Gunta
543	19	19-12-73 to 19-4-7/C	Bairagipatteda

544	19	19-12-185 to 19-4-9/8	Bairagipatteda
545	19	19-12-221 to 19-4-9/8B	Bairagipatteda
546	19	19-12-310 to 19-4-9/2	Bairagipatteda
547	19	19-12-498 to 19-4-9/8A	Bairagipatteda
548	19	19-12-538 to 19-4-9/10	Bairagipatteda
549	19	19-12-583 to 19-4-9/8D	Bairagipatteda
550	19	19-12-603 to 19-4-9/9	Bairagipatteda
551	19	19-12-401 to 19-4-12/A	Bairagipatteda
552	19	19-4-8/1 to 19-4-10	STV Nagar
553	19	19-4-42 to 19-4-13	STV Nagar
554	19	19-4-150 to 19-4-148/23	STV Nagar
555	19	19-4-251 to 19-4-149/68	STV Nagar
556	19	19-4-306 to 19-8-65	STV Nagar
557	19	19-4-361 to 19-8-131A	STV Nagar
558	19	19-4-380 to 19-8-140	STV Nagar
559	19	19-12-417 to 19-8-140/35	Bairagipatteda
560	19	19-12-578 to 19-8-158/25	Bairagipatteda
561	19	19-10-112 to 19-8-395/5	New Indira Nagar
562	19	19-4-8/1 to 19-8-214	
		19-4-30/4 to 19-8-82/15A	
		19-4-30/5 to 19-8-84/K5	
		19-4-6/4A to 19-8-113	
		19-4-30/8 to 19-8-139	
		19-4-3/4C to 19-8-111	S.T.V. NAGAR
		19-4-9/6 to 19-12-72	
		19-4-9/7A to 19-12-184	
		19-4-9/7 to 19-12-309	
		19-4-7/A to 19-12-672	
		19-4-9/7B to 19-12-676	
		to 19-8-66	
563	19	19-4-148/11 to 19-8-70/I3	Bhagath Singh Colony
564	19	19-4-149/1 to 19-8-169/25	Obulesu Colony
565	19	19-8-1 to 19-8-190/D	Hathiramji Colony
566	19	19-8-112 to 19-8-116/A/10	Hathiramji Colony
567	19	19-8-140 to 19-8-82/B	Hathiramji Colony
568	19	19-8-140/1 to 19-8-121/6	Venkateswara Apartment
569	19	19-8-150 to	Hathiramji Colony
570	19	19-8-395/4 to 19-8-169D	Hathiramji Colony
571	19	19-8-209 to 19-5-59E	Hathiramji Colony
572	19	19-8-84/H to 19-6-16	Yadava Colony
573	19	19-8-84/C to 19-6-58	Yadava Colony
574	19	19-8-112 to 19-6-20/B2	Yadava Colony
575	19	19-8-84 to 19-7-68	R.C. Road- Yadava Colony
576	19	19-8-111 to 19-6-19/508	Yadava Colony
577	19	19-12-1 to 19-8-169.508	Bairagipatteda
578	19	19-12-123 to 19-8-149	Bairagipatteda
579	19	19-12-247 to 19-8-190/D	Bairagipatteda
580	19	19-12-661 to 19-8-66/J	Bairagipatteda
581	19	19-12-673 to 19-8-70/A	Bairagipatteda
582	19	19-8-1 to 19-8-82K5	Dasarimatam
583	19	19-8-70/1 to 19-8-83/G/2	SBI Colony
584	19	19-8-122 to 19-8-118/B(1)	SBI Colony
585	19	19-8-170 to 19-8-82/A/10	Air Bye-pass Road
586	19	19-8-114 to 19-7-136	Yadava Colony
587	19	19-8-82/A to 19-7-99/D/17	Yadava Colony
588	19	19-8-121 to 19-8-90/h	SBI Colony
589	19	to 19-8-120	Yadava Colony, SBI Colony
590	19	19-8-169D to 19-8-208	Yadava Colony, SBI Colony
591	19	19-5-1 to 20-3-52/B	Gandhi Puram
592	19	19-6-1 to 20-3-53/C4	TTD Quarters
593	19	19-6-53 to Repeat 1 & 2 ward	Govindarajapuram
594	19	19-6-17/A to Repeat 1 & 2 ward	Govindarajapuram
595	19	19-7-20 to 20-3-59/G	TTD Choultries
596	19	19-6-19/101 to 20-3-71 and Bye-Numbers	Sridevei Apartment,
		to End (one house)	Govindaraja puram
597	19	19-8-169/101 to 20-3-92/3A	Mithra Classic Apartment
		to Repeat 1 & 2 Ward	Bank Colony
598	19	19-8-141 to (20-3-233 to	Mitra Classic Apartment, Bank

			Colony
599	19	19-8-159 to 20-3-350	Mitra Classic Apartment, Bank Colony
600	19	19-8-66/N to No Door Nos)	Yadava Colony
601	19	19-8-66A to 20-3-131/7	Dasari Mattam
602	19	19-8-71 to 20-3-131/16	Sivaji Nagar, Yadava Colony
603	19	19-8-83 to 20-3-131/D1	Yadava Colony
604	19	19-8-116 to 20-3-136	Yadava Colony
605	19	19-8-82/A to 20-3-138/14	Yadava Colony
606	19	19-7-69 to 20-3-139/12	Gopalraju Colony,
		to 20-3-144/A	Beside Railway Gate, Yellappareddy Quarters
607	19	19-7-99/D to 20-3-165	R.C. Road,
		to 20-3-238	Seshadri Sekhar Apartment
608	19	19-8-82 to 20-3-363	Dasarimattam,
		to Repeat 1 & 2	Yadava Colony
609	19	19-8-117 to Repeat 1 & 2	Yadava Colony
610	19	19-8-191 to 20-3-53/F5	Yadava Colony
611	20	20-3-1 to End (one house)	Sivajyothi Nagar, Yerramitta & Bhupal Nagar
612	20	20-3-53/A to 20-3-69	Yerramitta
613	20	20-3-53/D to 20-3-71/D	Yerramitta
614	20	20-3-53/G to 20-3-71/3	Yerramitta
615	20	20-3-54 to 20-3-73/A1	Yerramitta
616	20	20-3-70 to 20-3-91	Yerramitta
617	20	20-3-73/2 to 20-3-127/1	Yerramitta
618	20	20-3-92 to 20-5-95	Yerramitta
619	20	20-3-123/4 to End (one house)	Sivayothi Nagar
		to 20-5-233	
		to	
		to 20-5-476	
620	20	20-3-128 to 20-5-484	Sivayothi Nagar
621	20	20-3-131/8 to 20-5-494	Postal Quarters
622	20	20-3-131/A to 20-5-499	Sivajyothi Nagar
623	20	20-3-132 to One house	Sivajyothi Nagar
624	20	20-3-137 to 20-5-513/C	Pragathi Nagar
625	20	20-3-139 to 20-5-617	Sivajyothi Nagar
626	20	20-3-140 to One house	Airport Quarters
627	20	20-3-145 to 20-5-650	Sivajyothi Nagar
628	20	20-3-166 to 20-5-747/B	Ayyappa Colony
629	20	20-3-351 to 20-1-202/G	Sivajyothi Nagar
630	20	20-3-53/D to 20-1-414	Yerramitta
631	20	20-3-53/G1 to End	Yerramitta
632	20	20-3-53/E to End	Yerramitta
633	20	20-3-53/G/1 to End	Yerramitta
634	20	20-3-60 to End	Yerramitta
635	20	20-3-71/C to 20-1-438	Yerramitta
636	20	20-3-71/1 to 20-1-459/A	Yerramitta
637	20	20-3-72 to 20-1-460/A2	Yerramitta
638	20	20-3-74 to 20-1-460/5	Yerramitta
639	20	20-3-93 to 20-1-460/F3C	Yerramitta
640	20	20-5-1 to 20-1-469/H	Sanjay Gandhi Colony
641	20	20-5-99 to End	Sanjay Gandhi Colony
642	20	20-5-123 to End	Sanjay Gandhi Colony
643	20	to End	
644	20	20-5-250 to End	Sanjay Gandhi Colony
645	20	20-5-481 to 20-1-470/57H4	Sanjay Gandhi Colony
646	20	20-5-486 to 20-5-249/B	Sanjay Gandhi Colony
647	20	20-5-496 to 20-5-480	Sanjay Gandhi Colony
648	20	20-5-502 to One house	Sanjay Gandhi Colony
649	20	20-5-504 to One house	Sanjay Gandhi Colony
650	20	20-5-587 to 20-5-501	Sanjay Gandhi Colony
651	20	20-5-618 to One house	Sanjay Gandhi Colony
652	20	20-5-619 to 20-5-586	Sanjay Gandhi Colony
653	20	20-5-735 to One house	Sanjay Gandhi Colony
654	20	20-1-1 to One house	Korlagunta
655	20	20-1-203 to 20-5-734	Korlagunta
656	20	20-1-420/D to 20-1-416/18/C46	Korlagunta
657	20	20-1-420/C to 20-1-417/5	Korlagunta

658	20	20-1-420/G to 20-1-416/103	Korlagunta
659	20	20-1-420/B to 20-1-439/C	Korlagunta
660	20	20-1-421 to 20-1-420/A5	Korlagunta
661	20	20-1-440 to 20-1-420/B4	Korlagunta
662	20	20-1-460 to 20-1-420/D3	Korlagunta
663	20	20-1-460/1 to 20-1-470/57	Korlagunta
664	20	20-1-460/E to 20-1-470/96	Korlagunta
665	20	20-1-466 to 20-1-470/153D	Korlagunta
666	20	20-1-490 to 20-4-6N	Korlagunta
667	20	20-1-470/1 to 20-4-7C2	Korlagunta
668	20	20-1-470/1A to 20-4-43/C	Korlagunta
669	20	20-1-470 to 20-1-460/D5	Korlagunta
670	20	20-1-470/57A to 20-1-460/B2	Chandra Sekar Reddy Colony
671	20	20-5-234 to 20-1-460/C6	Sanjay Gandhi Colony
672	20	20-5-477 to 20-1-465	Sanjay Gandhi Colony
673	20	20-5-485 to 20-1-469/E	Sanjay Gandhi Colony
674	20	20-5-495 to 20-1-472/5H4	Sanjay Gandhi Colony
675	20	20-5-500 to 20-5-98	Sanjay Gandhi Colony
676	20	20-5-503 to 20-5-122/B1	Sanjay Gandhi Colony
677	20	20-5-514 to End	Sanjay Gandhi Colony
678	20	20-5-617/A to 20-4-7/6/2	Sanjay Gandhi Colony
679	20	20-5-618/A to 20-4-7/H5	Sanjay Gandhi Colony
680	20	20-5-651 to 20-2-548	Sanjay Gandhi Colony
681	20	20-1-415 to End	Subash Nagar
682	20	20-1-417 to End	Subash Nagar
683	20	20-1-416/100 to End	Subash Nagar
684	20	20-1-439 to End	Subash Nagar
685	20	20-1-420/A to 20-2-548/F1	Subash Nagar
686	20	20-1-420/B to End	Subash Nagar
687	20	20-1-420/D2 to 20-2-575/B2	Subash Nagar
688	20	20-1-470/1 to	C.S.R. Colony
689	20	20-1-470/57I to	C.S.R. Colony
690	20	20-1-470/97 to	Navodaya Colony
691	20	20-4-1 to	Kothapalli
692	20	20-4-7 to	Kothapalli
693	20	20-4-8 to	Kothapalli
694	20	20-1-460/D to	Korlagunta
695	20	20-1-460/B to	Korlagunta
696	20	20-1-460/C to	Korlagunta
697	20	20-1-461 to	Korlagunta
698	20	20-1-469/D to	Korlagunta
699	20	20-1-471 to	Korlagunta
700	20	20-5-95A to	Sanjay Gandhi Colony
701	20	20-5-100 to	Sanjay Gandhi Colony
702	20	20-4-7 to	Kotha Palli
703	20	20-4-7/1 to	Kotha Palli
704	20	20-4-7/C3 to	Kotha Palli
705	20	20-2-471 to 548/L End	Maruthi Nagar
706	20	20-2-548/1 to	Maruthi Nagar
707	20	20-2-548/A to 20-2-548/K2	Maruthi Nagar
708	20	20-2-548/2 to 20-2-548/I1	Maruthi Nagar
709	20	20-2-548/H to	Maruthi Nagar
710	20	20-2-548/F to	Maruthi Nagar
711	20	20-2-624/2/1 to	Maruthi Nagar
712	20	20-2-549 to	Maruthi Nagar
713	20	20-2-548 to	Maruthi Nagar
714	20	20-2-548/1 to	Maruthi Nagar
715	20	20-2-548/A to	Maruthi Nagar
716	20	20-2-548/F1 to	Maruthi Nagar
717	20	20-2-548/F to	Maruthi Nagar
718	20	20-2-548/E1 to	Maruthi Nagar
719	20	20-2-548/H2 to	Maruthi Nagar
720	20	20-2-548/H4 to	Maruthi Nagar
721	20	20-2-548/J to	Maruthi Nagar
722	20	20-2-548/D to	Maruthi Nagar
723	20	20-2-548/D2 to	Maruthi Nagar
724	20	20-2-548/D1 to 20-6-35	Maruthi Nagar
725	20	20-2-548/D4 to 20-2-548/D4	Maruthi Nagar
726	20	20-2-548/E4 to 20-2-548/E4	Maruthi Nagar

727	20	20-2-548/E3 to 20-2-548/H4	Maruthi Nagar
728	20	20-2-548/E2 to 20-2-548/A18/B	Maruthi Nagar
729	20	20-2-548/E to 20-2-548/K2	Maruthi Nagar
730	20	20-2-548/L to 20-2-548/I1	Maruthi Nagar
731	20	20-2-548/A/1A to END	Maruthi Nagar
732	20	20-2-548/K to 20-2-548/G3	Maruthi Nagar
733	20	20-2-548/I to 20-2-708	Maruthi Nagar
734	20	20-2-548/I2 to	Maruthi Nagar
735	20	20-2-548/B to	Maruthi Nagar
736	20	20-2-548/C to	Maruthi Nagar
737	20	20-2-548/C1 to	Maruthi Nagar
738	20	20-2-548/A1 to	Maruthi Nagar
739	20	20-2-548/A1/A3 to	Maruthi Nagar
740	20	20-2-548/A2 to	Maruthi Nagar
741	20	20-2-548/A3 to	Maruthi Nagar
742	20	20-2-548/G1 to	Maruthi Nagar
743	20	20-2-548/J1 to	Maruthi Nagar
744	20	20-2-548/G to	Maruthi Nagar
745	20	20-2-548/1G to	Maruthi Nagar
746	20	20-2-548/G2 to	Maruthi Nagar
747	20	20-2-548/H to	Maruthi Nagar
748	20	20-2-548/D3 to	Maruthi Nagar
749	20	20-6-1 to	Maruthi Nagar
750	20	20-2-548/D to	Maruthi nagar
751	20	20-2-548/E to	Maruthi nagar
752	20	20-2-548/H1 to	Maruthi nagar
753	20	20-2-548/A1 to	Maruthi nagar
754	20	20-2-548/K to	Maruthi nagar
755	20	20-2-548/I to Maruthi nagar	Maruthi nagar
756	20	20-2-548/L to Maruthi nagar	Maruthi nagar
757	20	20-2-548/G to Maruthi nagar	Maruthi nagar
758	20	20-2-576 to Maruthi nagar	Maruthi nagar
759	20	20-2-548/A14 to Korlagunta Maruthi Nagar	Korlagunta Maruthi Nagar
760	20	20-2-548/A7 to Korlagunta Maruthi Nagar	Korlagunta Maruthi Nagar
761	20	20-2-548/A18/A to Korlagunta Maruthi Nagar	Korlagunta Maruthi Nagar
762	20	20-2-548/A18/B to Korlagunta Maruthi Nagar	Korlagunta Maruthi Nagar
763	20	20-2-548/A4 to Korlagunta Maruthi Nagar	Korlagunta Maruthi Nagar
764	20	20-2-548/A10/A to Korlagunta Maruthi Nagar	Korlagunta Maruthi Nagar
765	20	20-2-548/A13/B to Korlagunta Maruthi Nagar	Korlagunta Maruthi Nagar
766	20	20-2-548/A13/C to Korlagunta Maruthi Nagar	Korlagunta Maruthi Nagar
767	20	20-2-548/12 to Korlagunta Maruthi Nagar	Korlagunta Maruthi Nagar
768	20	20-2-548/A13/D to Korlagunta Maruthi Nagar	Korlagunta Maruthi Nagar
769	20	20-2-548/A13/A to Korlagunta Maruthi Nagar	Korlagunta Maruthi Nagar
770	20	20-2-548/A11 to Korlagunta Maruthi Nagar	Korlagunta Maruthi Nagar
771	20	20-2-548/A12 to Korlagunta Maruthi Nagar	Korlagunta Maruthi Nagar
772	20	20-2-548/A5/C to Korlagunta Maruthi Nagar	Korlagunta Maruthi Nagar
773	20	20-2-548/A5/D to Korlagunta Maruthi Nagar	Korlagunta Maruthi Nagar
774	20	20-2-548/A6 to Korlagunta Maruthi Nagar	Korlagunta Maruthi Nagar
775	20	20-2-548/A5/A to Korlagunta Maruthi Nagar	Korlagunta Maruthi Nagar
776	20	20-2-548/A5 to Korlagunta Maruthi Nagar	Korlagunta Maruthi Nagar
777	20	20-2-548/A7 to Korlagunta Maruthi Nagar	Korlagunta Maruthi Nagar

778	20	20-2-548/A6/A to Korlagunta Maruthi Nagar	Korlagunta Maruthi Nagar
779	20	20-2-548/A6 to Korlagunta Maruthi Nagar	Korlagunta Maruthi Nagar

ANNEXURE-II			
List of Areas Prohibited for High Rise Buildings			
Sl. No	**Ward No.**	**Block No.**	**Name of the Locality / Area**
1	**2**	**3**	**4**
1			All the areas as per Annexure-I
2	1	1-6-600 to 1-6-790	Indira Nagar
3	1	1-3-276 to 1-3-291	P.P.Chavadi Street
4	1	1-4-345 to 1-4-473/P	Kummara Thopu
5	1	1-4-473/1 to 1-4-493	Uttagunta (Hameed Nagar)
6	1	1-4-494 to 1-4-494/62/A	Salivahana Nagar
7	1	to	
8	1	1-3-292 to 1-3-337	P.P.Chavadi Street
9	2	2-2-232, 232A to School	Salivahana Nagar
10	2	36923 to 2-1-76/B	Kola Street
11	2	28522 to 2-1-153	Kola Street
12	2	to	
13	2	2-1-76/A to 2-1-76/Z	Chinnagunta
14	2	2-1-76/1 to 2-1-76/57	Chinnagunta
15	2	2-2-235/1 to 2-2-235/15	Chinnagunta
16	2	to 2-2-235/A, B	Chinnagunta
17	2	2-2-236 to S.T.Office	Chinnagunta
18	2	2-2-236/11 to ®	Chinnagunta
19	3	36951 to 43160	School Street
20	3	43526 to 19055	Chambadhi Street
21	3	19421 to 28917	Pogathota Street
22	3	29284 to 3-4-124	Giddangi Street
23	3	3-5-125 to 3-5-139, 166	Adrathi Sandhu
24	3	3-6-140 to 3-6-165	Katikarangadi Street
25	3	3-6-166/A to 3-6-194	Katikarangadi Street
26	3	3-7-195 to 3-7-273	Bestha Street
27	3	3-7-274 to 3-8-330	Kummaramitta Street
28	4	36982 to 4-1-206	Patnool Street
29	4	4-2-207 to 4-2-294	Gaju Street
30	4	4-2-346 to 4-3-360	Gaju Street
31	4	4-3-762 to 4-3-772/C,	Giripuram
32	4	4-4-147 to 4-4-148/6	Nehru Nagar
33	4	4-4-1061/B to 4-4-1125/B	Bommagunta
34	4	36989 to 4-8-268/A	N.C.B. Colony
35	4	36988 to 47215	Ramakrishna Puram
36	4	4-7-1/1 to 30779	TUDA Apartment
37	4	4-4-861 to 4-4-911	Nehru Nagar
38	4	4-4-912 to 4-4-957	Nehru Nagar
39	4	4-4-957/A to 4-4-1021	Nehru Nagar
40	4	4-4-841 to 4-4-860	Nehru Nagar
41	4	36987 to 4-6-77/A	Reservoir Colony
42	4	38083 to 4-6-5/B	R.S.V.P.
43	4	4-4-613 to 4-4-727	Nehru Nagar
44	4	4-4-503 to 4-4-612	Nehru Nagar
45	4	4-4-1022 to 4-4-1061/A	Nehru Nagar
46	4	4-2-295 to 4-2-336	Gaju Street
47	4	4-3-337 to 4-3-345	Giripuram
48	4	4-3-362 to 4-3-502/A	Giripuram
49	4	4-3-773 to 4-3-794/E	Giripuram
50	4	4-5-1126 to 4-5-1253/A	Giripuram
51	5	5-2-107 to 5-2-205A	Anantha Street
52	5	5-3-206 to 5-3-248	Gandla Mitta Street
53	5	5-4-249 to 5-4-286	Vijayalakshmi Street
54	5	5-5-356 to 5-5-429	SanjaiGandhi nagar
55	6	6-3-174 to 6-3-184	Manchala Street
56	6	6-3-185 to 6-3-260	Manchala Street
57	6	6-3-261 to 6-3-296	Manchala Street
58	6	6-3-297 to 6-3-317	Manchala Street
59	6	6-3-318 to 6-3-328	Manchala Street

60	6	6-5-442 to 6-5-483/B	KalikammaGudi Street
61	6	6-6-483/C to 6-6-536/A	KalikammaGudi Street
62	6	6-1-C/1 to 6-1-C/26	Haridwara Colony
63	6	6-8-750 to 6-8-758	Sanjeevaiah nagar
64	6	6-8-759 to 6-8-787/2	Sanjeevaiah nagar
65	6	6-1-1J to 6-1-1J/47	Haridwara Colony
66	6	6-1-1missed to	Haridwara Colony
67	6	37052 to 6-10-132	Singalagunta
68	6	6-10-133 to 6-10-157	Singalagunta
69	6	6-10-158 to 6-10-243/1	Singalagunta
70	6	6-10-244 to 6-10-356/A	Singalagunta
71	6	6-10-357 to 6-10-438A	Singalagunta
72	6	6-8-788 to 6-8-814	Back side of church,
		to	Sanjeevaiah Nagar
73	6	37773 to 40330	Haridwara Colony
74	6	6-1-2K2 to 6-1-2K16	Haridwara Colony
75	6	6-1-2N/B to 3A	Haridwara Colony
76	6	23529 to 6-1-64/A42	Pachigunta V.R. Nagar
77	6	B, C, D, E, FTypeallquarters to	TTD Quarters
78	6	37053 to 6-11-205/c	Chennareddy Colony
79	6	6-11-206 to 6-11-328	Maruthi Nagar
80	6	37055 to 21714	A.B. Colony – 1
81	6	37056 to 6-14-66/D	A.B. Colony – 2
82	7	7-6-216 to 7-6-263	Mitta Street
83	7	7-4-116 to 7-4-132/h	R.Sannidhi Street
84	7	7-6-264 to 7-6-333/F	Mitta Street
85	8	8-3-258 to 8-3-351	New Street
86	8	8-4-352 to 8-4-381	Gajula Street
87	8	8-5-382 to 8-5-542	Panta Street
88	9	37135 to 18507	G.M.Street
89	9	18873 to 9-2-77/A	G.M. Lane
90	9	28736 to 9-3-171/A	Porla Street
91	10	37165 to 30225	Akuthota Street
92	10	10-4-232, 233 to 10-4-239	Muduru Sandhu
93	10	10-5-240 to 10-5-268	Doddapuram Street
94	10	10-6-269 to 10-6-281	Giridhardas Lane
95	10	10-7-282 to 10-7-321	Nadamuni Street
96	10	10-9-331 to 10-9-354	Jaganadhapuram
97	10	10-10-355 to 10-10-375/A	Jagannadhapuram
		10-11-376 to 10-11-390A	
98	10	10-12-391 to 10-12-439/B1	Jagannadhapuram
99	10	10-4-224 to 10-4-231/A	Muduru Sandu
100	10	10-12-440 to 10-12-461/A	Jagannadhapuram
101	10	10-13-461/B to 10-13-476/A, B, C, D	Jagannadhapuram
102	10	10-2-115 to 10-2-137	KalikammaGudi Street
103	12	12-3-228 to 12-3-242/A	Sunnapu Street
104	12	12-3-243 to 12-3-282	Sunnapu Street
105	12	12-3-283 to 12-3-335	Sunnapu Street
106	12	12-4-336 to 12-4-386	Bandla Street
107	12	12-4-391 to 12-4-523/A	Bandla Street
108	12	12-5-524 to 12-5-529/A	S.K.D. Nagar
109	12	12-5-555 to 12-5-569/C	S.K.D. Nagar
110	12	12-5-529/B to 12-5-553, 554	S.K.D. Nagar
111	12	12-4-387 to 12-4-390	Bandla Street
112	12	37226 to 12-3-210	Yadava Street, Tilak Road, Nimmakayala Street,
113		to	
114	13	13-7-939/G1 to 13-7-939/G5	Korlagunta
115	13	13-7-939/GA to 13-7-939G6	Korlagunta
116	13	13-7-939/H2/A to 13-7-939/H2/B	Korlagunta
117	13	13-7-939/H2/C1 to 13-7-939/H2/C3	Korlagunta
118	13	13-7-943G to 13-7-943H	Korlagunta
119	13	13-7-954 to 13-7-964/A	Korlagunta

120	13	13-5-531/A2, 531/A11, 531/2A, 531/3A, 531/B, B1/1, 531B1/2, 531B1, 531B1/2, 531B/3, 531B2, 531BB1/4, 531B1/5, 531BB1/6, 531B1/7, 531B1/8, 531B1/9, 531BB3, B1/10, 531/2, 531/2/A, 531/2/B, 531/2B1, 531A3, 531/3A, 531/3A, 531/D, 531/A, 531/3, 531/3/1, 531/3C, 531/3D, 531/3E, 531/4, 531A4/1, 531/4A/1, 531/5, 531/5A, 531/5/1, 531/5/1/1, 531/5A1, 531/A5/1, 531/A5/2, 531/5A/3, 531/5A/6, 531C, 531A5, 531A4, 531/A5, 531/5/D2, 531/5/D3, 531/5/D4, 531/5/D5, 531/D8, 531D11, 531/D12, 531D13, 531/D14 to	Tata Nagar
121	13	13-7-772 to 13-7-822	Vinayaka Nagar
122	13	13-7-823 to 13-7-938/B	Korlagunta
123	13	13-7-939/1A, 939/1A, 939A1, 939A, 939A2, 939A1, 939B, 939C, 939D, 939E, 939E1, 939F, 939F1, 939G, 939G6, 939G7, 939G8, 939H, 939H, 939H1/2, 939H1/3, 939/HA, 939H2, 939H4, 939H2/1, 939H2/C, 939H2/C3, 939H2/1D, 939H2/D, 939/8, 939/7, 939/9, 939/10, 939/11, 939/11A, 939H5, 939H6, 939H3, 939H3/1, 939/1, 939/2, 939/3 to	Korlagunta
124	13	13-7-940 to 13-7-942	Korlagunta
125	13	13-7-943 to 13-7-943A, 943B, 943C, 943D, 943E, 943E1, 943F, 943F1, 943F2, 943F3, 943F4	Korlagunta
126	13	13-7-944 to 13-7-953A	Korlagunta
127	13	13-1-80B to 13-1-80B1	Peddakapu Street
128	13	13-1-80B2 to 13-1-80B25	Peddakapu Street
129	13	13-2-225 to 13-2-247C	Chinnakapu Street
130	13	13-3-391A to 391A1, 391A2, 391A3, 391B	Municipal Vegetable Market Area
131	13	13-4-402 to 13-4-525	Mallaiahgunta Katta
132	13	13-8-1 to 13-8-312C	Tataiahgunta
133	13	13-3-275A, 275A2, 275B, 275B1, 275B2, 275B3 to	Nawab Pet
134	13	13-3-276 to 13-3-326	Nawab Pet
135	13	13-5-526 to 13-5-531&531A, 13-5-531D5, 531D6, 531D7, 531/5E, 531/5E1, 531/5F, 531/5F2, 531/5F3, 531/5F4, 531/5F4/4, 531/5F5, 531/C, 531/C1/1, 531/C1, 531/C2, 531/C3, 531/5B, 531/5B1, 531/6, 531/7, 531/8, 531/9, 531/9A, 531/9B, 531/9A, 531/10, 531/10A, 531/10b, 531/10C, 531/11, 531/12/1, 531/11A1, 531/12, 531/12a, 531/12B, 531/12C	Tata Nagar
136	13	13-5-531/1B to 13-5-531/18	Tata Nagar
137	13	13-5-532 to 13-5-571D	Tata Nagar
138	13	13-6-572 to 13-6-600/44/162B	Peddakapu layout
139	13	13-6-600/45 to 13-6-600/53	Peddakapu layout
140	13	13-6-601 to 13-6-615, 615A, 615A1, 615A2, 615A3, 615B, 615C, 615F, 615G, 615I, 615J, 615J1, 615K, 615M, 615H	Peddakapu layout
141	13	to	
142	13	13-1-1 to 13-1-80, 80A, 81	Peddakapu Street
143	13	13-1-82 to 13-1-224	Peddakapu Street
144	13	13-2-248 to 13-2-275	Chinnakapu Street
145	13	13-6-600/44/163 to 13-6-600/44/204	Peddakapu Layout
146	13	13-6-615H1 to 13-6-615H49	Peddakapu Layout
147	13	13-6-616 to 13-6-769	Peddakapu Layout
148	13	13-6-770 to 13-6-771/14	Peddakapu Layout
149	13	13-6-771A1 to 13-6-771/A13	Peddakapu Layout
150		to	
151	14	14-1-1 to 14-1-47;	Nehru Street
152	14	14-1-112 to 14-1-115/A3	Nehru Street

153	14	14-1-48 to 14-1-83	Nehru Street
154		to	
155	15	15-5-253 to 15-5-276	Marrimanu Sandhu
156	16	16-4-352 to 16-4-377/B	Kasthuribai Sandu
157	16	16-5-378 to 16-5-416	Kasthuribai Sandu
158	16	16-1-135 to 16-1-153	Karnala Street
159	16	16-6-417 to 16-6-465	Karnala Layout
160	17	17-1-1 to 17-1-64/C	Aravapalli Street
161	17	17-2-65 to 69 to 17-2-154 17-2-70 to	Poola Street
162	17	17-3-154/1 to 17-3-286/B	Poola Street
163	17	17-4-287 to 17-4-305	Avilala Street
164	17	17-5-305/A to 17-5-334/A	Avilala Street
165	17	17-6-335 to 17-6-445	Poola Thota
166	18	18-1-268 to 18-1-401/B	Bhavani Nagar
167	18	18-1-451 to 18-1-464	Bhavani Nagar
168	18	18-1-552 to 18-1-560A	Bhavani Nagar
169	18	18-1-586 to 18-1-587/505	Bhavani Nagar
170	18	18-1-609 to 18-1-733A	Bhavani Nagar
171	18	18-1-735 to 18-1-744	Bhavani Nagar
172	18	18-1-747 to 18-1-798	Bhavani Nagar
173	18	18-1-66 to 66/O, 66/R, 66N, 66M, 66/M1, 66/K, 66/K1, 66K2, 66/L8, 66/L6, 66/L5, 66/L3, 66/L2, 66/L1, 66/S	Bhavani Nagar
174	18	18-1-66A to 18-1-66/A5	Bhavani Nagar
175	18	18-1-67 to 18-1-90B	Bhavani Nagar
176	18	18-1-66 to 18-1-66/1, 66/1A, 66/2, 66/1B, 66/1C, 66/2m66/3m66/3Am66/3C, 66/3D, 66/3E	Bhavani Nagar
177	18	18-1-90/A1 to 90/9/103(18-1-91NodoorNo.)	Bhavani Nagar
178	18	18-1-92A to 18-1-94/1	Bhavani Nagar
179	18	18-1-90/A14 to 18-1-99/B	Bhavani Nagar
180	18	18-1-745 to 18-1-745/2	Bhavani Nagar
181	18	18-1-746 to 18-1-746/6A	Bhavani Nagar
182	18	18-1-734A to 18-1-734/C1	Bhavani Nagar
183	18	18-6-1 to 18-6-427	Sundaraiah Nagar
184	18	18-5-372 to 18-5-461A	Sapthagiri Nagar
185	18	18-1-800 to 18-1-800+810A	Bhavani Nagar
186	18	18-8-55 to 18-8-65/D	Madura Nagar
187	18	18-5-1 to 18-5-371	Sapthagiri Nagar
188	18	18-5-1/1 to 18-5-1/47	Suraiah Katta
189	18	18-2-239 to 18-2-291(18-2-236 to 238Nodoors)	Ashok Nagar
190	18	18-2-292A1 to 18-2-292B/167	Yanadhi Colony
191	18	18-2-292/C to 18-2-292/C7	Yanadhi Colony
192	18	18-1-799(Additional) to	
193	18	18-9-1 to 18-9-130	Municipal Employees Colony
194	19	19-1-1 to 19-1-120	Chinthala Chenu
195	19	19-2-1 to 19-2-88/D5	U.P.H. Wada & Srinivasa puram
196	19	19-3-10, 13/D1, 10/A, 3/D/2, 10B, 10/A1, 13/M, 13/M1, 13/M2, 13/M3, 13/M4, 14, 13K, 13/H1, 13/H2, to	Santhi Nagar
197	19	19-3-1/D/2A2, D/2A, D1, C3, C3, D2/A15, 13/P, D11/F, D2/A12, D2/B10, D2/A11, D2/B12, D2/A9, D2/A10, D2/A3, D2/A4, D2/A5, D2/A6, D2/A7, C, A3, C, A1, A2/B, C4, A7, A, A2/A, A2/D, D2/F16, D3/E5, D3/E6, D3/E7, D3/E16, D2/F16, D2/F10, A4, A6/A, 6A1, 6A/10, A/5A, A/5A1, 5A2, 5A3, A5/C, A5/C1, 5/B, , 5/B1, A5, B, B9, B8/A2, B8, B8/A1, B/8A, H, A1, B3/B1, B2/A2, B3/A1, B2/A1, F, A3, B2/A5, A4, A1, B/2A, B/2A1, B2/2A2, to	Santhi Nagar
198	19	19-3-1/B1/A1, B1/E1, 19-3-14/10, 2B, 19-3-14, 1, 2, 9, 2A, 3, 4, 2C, 6, 6B, 7, 18C, B13/D, 1C/10, 19-3-1/B1/A, B2, B3, B/35, 1B, B/31, B32, B/49, B13,	Santhi Nagar

		B11, B14, B1, B1/A, B, B15, B16, B8, B8/2, B4, B4/B, B4/CA, B4/D, B4/C, B4/E, 4D, B4/C1, B4/C3, 10/3, B7/A1, B7, B7/A, 3, B7/A2, B8, B7/E1, B5/A, B7/C3, G7, B4, B5/2, B5/1, B5, B5/4, B7, B5/6A, B5/3A, B10, C, 19-3-10A, B19-3-1/D2/A1, D2/A3, C1/A2, C1/B2, C2/A, C1/A1, C1/B1, C1/A, C, C2, C3, C3, D/2B, D/2C, 19-3-2, 19-3-1, E, E1, E2, F2, F3, F4, F5, G, G2, G3, K, K1, K2, 2, K5, 1K, KA, 19-3-2/F2, B1, B9, F, F2, B9, F, F2, F3, E, E3, F2/B, A, C, D1, A, E4, E, E1, E, E3, F1, F1/A, G, F1/A20, G2/A, GA/1, GA/2, GA, G2, 3G, F1/B, F1, G, G, 19-3-3/D2, 2, 19-3-2/4, 2, 1, 4A, 3B, 3C, G6, G5, G3/A, G2, G4, G1, G5/F2, 19-3-5/F, F1, H, I, J, K1, K, G, C1, 19-3-2/G4/A, 2/G3, H, G to	
199	19	19-3-3, A, B1, 8, 5, 19-3-2H2, H1, H2, H3, G3, G4, 19-3-3/2, 1, 3A, 3, 19-3-5/C, 19-3-1/B5/3, B5/4, B6/3, B6/2, B6/1, G5/F, G3/E1, G3/E1, G6/F, 19-3-2/G/3C, G/B3, G/3A, 19-3-1/B5, 19-3-2/G, 19-3-1/G/3F, 19-3-2/H1, G/32C, G/3B, B5/4, G/4C, G3/E5, G3/E4, G3/E, G3/C1, G3/E1, G3/E3, 19-3-2G/6A1, G6, G3, G/7A, G/7C, G9/A, G3/H, G/2F, G/6A, G/8C, G/8E, G7, G8/A, G8, G7/A, G9/A, G9, G/8D, 19-3-2, G/8B, G/A8, G2, G12/K, 19-3-5/D1/B, D1/A, D1, D1/3, D2, C4, K2, CA, CA, C2, C3, C5, C5/A, C6, C6/A1, C6/A2, J1, M, H, 19-3-2/H/2, H3, H4, 19-3-39, A, C, 19-3-41, A, 19-3-42, 19-3-13/2, 19-3-13, 19-3-12/B, A1, A, B1, A, D, C, G1, C2, C3, C4, C5, 1A, 19-3-11/A1, A, 19-3-12/1, 2, 19-3-9, 19-3-12/1, 2, 19-3-9, 19-3-10, 19-3-12, 19-3-11, B, B2, C, E, B1, B3, D, D1, 19-3-7B, 19-3-7/A2, 19-3-7/B, B1, 19-3-8/B2, B1, B, E, F, E1, F1/A, F2, A, F3, 19-3-7/A, C1, C, D, D4, D1, D2, A, 19-3-6/A, 19-3-3/B, B1, 19-3-4/D, D1, C1/A, C, C5, C6, C8, C7, C1O, C2, A, A5, A6, 19-3-5/1, 5/1B, 5/1A5/1A/C, 19-3-13G/A, E, F1, F3, 19-3-41, A, to	Santhi Nagar
200	19	19-9-22/g3 to 19-9-37/A11	Lakshmipuram
201	19	19-13-1 to 19-13-70	Parvathi puram
202	19	19-13-4/1 to 19-13-4/70	Lenin Nagar
203	19	19-15-1 to 19-15-91	Pragathi Nagar
204	19	19-3-1/B4/C to 19-3-1/B13/A	
		19-3-1/B4/F to 19-3-1/B12/C	
		19-3-1/4D to 19-3-1/B11/1	
		19-3-1/B4/C1 to 19-3-1/B7/A	
		19-3-1/B4/C3 to 19-3-1/B12/C	GARUDADRI NAGAR
		19-3-1/B5/D10 to 19-3-1/B/A7	
		19-3-1/B4/D16 to 19-3-1/B10/A3	
		19-3-1/B6/A to 19-3-1/B10/B3	
		19-3-1/B4/D6 to 19-3-1/B/A5	
		19-3-1/B4/D5 to 19-3-1/B12/B	
		19-3-1/B4/D9 to 19-3-1/B7/A2	
		19-3-1/B4/D1 to 19-3-1/B/A6	
		19-3-1/B10/A2 to 19-3-1/B12/A	
		19-3-1/B1/A9 to 19-3-1/B12	
		19-3-1/B10/A3 to 19-3-1/B10/A3	
		19-3-1/B6/E to 19-3-1/E12/A1	
		19-3-1/B5/D1 to 19-3-1/B5/B	
		19-3-1/B5/D2 to 19-3-1/B6/E	
		19-3-1/C6/41 to 19-3-1/B10/C	
		19-3-1/B4/C to 19-3-1/B/A15	
		19-3-1/B4/C4 to 19-3-1/B/A8	
		19-3-1/B6/A to 19-3-1/B/A17	

		19-3-1/B6/C to 19-3-1/B7/A5	
		19-3-1/B6/D to 19-3-1/B7/A4	
		19-3-1/C6/46 to 19-3-1/B/A11	
		19-3-1/B6/C3 to 19-3-1/B/A12	
		19-3-1/B6/C2 to 19-3-1/C6/20	
		19-3-1/B5/1 to	
		19-3-1/B5/A to	
		19-3-1/B6/C6 to	
		19-3-1/B6/C5 to	
		19-3-1/B10 to	
205	19	19-3-1/B10/A3 to 19-3-3D	
		19-3-1/B/A4 to 19-3-3/D1	HARINATHA REDDY COLLEGE SIDE
		19-3-1/B8/D8 to 19-3-3/D/A1	
		19-3-1/B8/C to 19-3-3/D2	
		19-3-1/C5/A5 to 19-3-3/DA	
		19-3-1/C6/46 to 19-3-3/K	
		19-3-1/C7 to 19-3-3/K1	
		19-3-1/C8 to 19-3-2/G3/B	
		19-3-1/C9 to 19-3-3/K2	
		19-3-1/C10 to 19-3-7/1	
		19-3-1/C6/1 to 19-3-7/A2	
		19-3-1/C6/2 to 19-3-7/3C	
		19-3-1/C6/D to 19-3-7/4A	
		19-3-1/C6/D1 to 19-3-7/A3	
		19-3-2/G10 to 19-3-7/4C	
		19-3-2/H11 to 19-3-7/4A	
		19-3-2/H19 to to 19-3-7/4C	
		19-3-2/H39 to 19-3-7/4A	
		19-3-2/G3/J to 19-3-5/C2	
		19-3-2/G4/J1 to 19-3-5/1	
		19-3-2/G4/M6 to 19-3-5/C1/A	
		19-3-2/G10/M2 to 19-3-5/C4/A	
		19-3-2/G4/J to 19-3-5/C1	
		19-3-2/G5/M to 19-3-5/C	
		19-3-2/G4/M to 19-3-5/C/1A	
		19-3-2/G10 to 19-3-5/C/1E	
		19-3-2/G4/M5 to 19-3-5/C1/1A	
		19-3-2/G10 to 19-3-5/B2	
		19-3-2/G12 to 19-3-7/3	
		19-3-2/E/12A to 19-3-7/4	
		19-3-2/C2/A6 to 19-3-7/3A	
		19-3-5/C1 to 19-3-3/7	
		19-3-3/H5 to 19-3-3/7\A1	
		19-3-3/H6/A to 19-3-3/7A	
		19-3-3/H6 to	
		19-3-3/D/B1 to	
206	19	19-9-3/B4 to 19-9-3/E4	JAYA NAGAR
		19-9-3/A3 to 19-9-3/E2	LAXMI PURAM
		19-9-3/A3/G1 to to 19-9-3/E5	
		19-9-3/A3/G9 to 19-9-3/E6	
		19-9-3/A5 to 19-9-3/E10	
		19-9-3/A/5A to 19-9-3/EA	
		19-9-3/A8 to 19-9-3/EB	
		19-9-3/A6 to 19-9-22/G2	
		19-9-3/A2 to 19-9-22/C	
		19-9-3/A/7A to 19-9-22/1	
		19-9-3/A7 to 19-9-22/B	
		19-9-3/E5 to 19-9-22/G	
		19-9-3/F to 19-9-11	
		19-9-3/A8 to 19-9-11/A	
		19-9-3/A3 to 19-9-11/B	
		19-9-3/A1 to 19-9-11/1	
		19-9-3/1 to 19-9-11/2	
		19-9-3/F3 to 19-9-11/3	
		19-9-3/1B to 19-9-27/A6	
		19-9-3/6A to 19-9-27/A7	
		19-9-3/4A to 19-9-27/B8	
		19-9-3/6 to 19-9-27/A8	

		19-9-3/5 to 19-9-27/A10	
		19-9-3/2 to 19-9-27/A1	
		19-9-3/2A to 19-9-29/A1	
		19-9-3/3 to 19-9-29	
		19-9-3/4 to 19-9-29/A	
		19-9-7/E/A1 to 19-9-29/D	
		19-9-5 to 19-9-29/C	
		19-9-5/A to 19-9-29/B1	
		19-9-5/G1 to 19-9-29/B	
		19-9-5/G2 to 19-9-18/C	
		19-9-5/G3 to 19-9-18/D	
		19-9-5/G5 to 19-9-18/F	
		19-9-7 to 19-9-18/F1	
		19-9-7/3A to 19-9-18/F2	
		19-9-7/EA to 19-9-18/FA	
		19-9-7/E4 to 19-9-28	
		19-9-7/E3 to 19-9-28/1	
		19-9-6A to 19-9-28/3	
		19-9-6/A1 to 19-9-8/1A	
		19-9-7/EA1 to 19-9-8/1	
		19-9-7/C to 19-9-8/A	
		19-9-7/C7 to 19-9-8/D	
		19-9-7/1A to 19-9-8/B	
		19-9-7/1 to 19-9-28	
		19-9-7/6/A1 to 19-9-28/F	
		19-9-6/A2 to 19-9-28/G	
		19-9-6/2A to 19-9-28/H	
		19-9-6/2C to 19-9-28/H1	
		19-9-6/A4 to 19-9-28/J	
		19-9-6/A5 to 19-9-28/H1/D	
		19-9-6/A3 to 19-9-28/C9	
		19-9-6/A6 to 19-9-28/H2/E	
		19-9-6/C6 to 19-9-28/H1/B	
		19-9-6/C7 to 19-9-28/H2/C	
		19-9-6/B to 19-9-28/H/1A	
		19-9-6/B3/A to 19-9-28/A	
		19-9-6/B2/A to 19-9-28/1	
		19-9-6//B2 to 19-9-29/3	
		19-9-6/B4 to 19-9-29/2	
		19-9-3/E7 to 19-9-29/1A	
		19-9-3/E8 to 19-9-29/1	
		19-9-6/B1 to 19-9-29/4	
		19-9-3/F to 19-9-29/9D	
		19-9-3/A2 to 19-9-29/12A	
		19-9-3/F/A1 to 19-9-29/10D	
		19-9-3/1/A3 to 19-9-28/H3	
		19-9-3/F/A2 to 19-9-28/H3/A	
		19-9-3/F/A3 to 19-9-28/H2	
		19-9-3/E1 to 19-9-28	
		19-9-11/B1 to 19-9-28/2A	
		19-9-3/E3 to 19-9-28/2A/1	
		to 19-9-28/6A	
		to 19-9-28/6B	
207	19	19-9-40 to 19-9-76	T.C. Road (old)
208	19	19-3-12G1 to 19-3-G1	Kasimgadda
209	19	19-3-12D to 19-3-12/J	Kasimgadda
210	19	19-10-1 to 19-10-111/B	New Indira nagar
211	19	19-4-40 to 19-4-41/6	STV Nagar
212	19	19-4-240 to 19-4-250	STV Nagar
213	19	19-4-293 to 19-4-305	STV Nagar
214	19	19-4-335 to 19-4-360/A1	STV Nagar
215	19	19-4-366 to 19-4-379/D	TMC, STV Nagar Municipal School
216	19	19-13-70/A to 19-13-71	Electrical Sub Station
217	19	19-4-8/1 to 19-4-39/10B to 41	STV Nagar
218	19	19-4-42 to 19-4-148/10A	STV Nagar
219	19	19-4-150 to 19-4-239	STV Nagar
220	19	19-4-251 to 19-4-292D	STV Nagar
221	19	19-4-306 to 19-4-334	STV Nagar
222	19	19-4-361 to 19-4-365/A	STV Nagar

223	19	19-4-380 to 19-4-393	STV Nagar
224	19	19-4-8/1 to 19-4-9/11	
		19-4-30/4 to 19-4-7/C	
		19-4-30/5 to 19-4-9/8	
		19-4-6/4A to 19-4-9/8B	
		19-4-30/8 to 19-4-9/2	
		19-4-3/4C to 19-4-9/8A	S.T.V. NAGAR
		19-4-9/6 to 19-4-9/10	
		19-4-9/7A to 19-4-9/8D	
		19-4-9/7 to 19-4-9/9	
		19-4-7/A to 19-4-12/A	
		19-4-9/7B to 19-4-10	
		to 19-4-13	
225	19	19-4-148/11 to 19-4-148/23	Bhagath Singh Colony
226	19	19-4-149/1 to 19-4-149/68	Obulesu Colony
227	19	19-8-84/H to 19-8-82/15A	Yadava Colony
228	19	19-8-84/C to 19-8-84/K5	Yadava Colony
229	19	19-8-112 to 19-8-113	Yadava Colony
230	19	19-8-111 to 19-8-111	Yadava Colony
231	19	19-8-1 to 19-8-66	Dasarimatam
232	19	19-8-70/1 to 19-8-70/I3	SBI Colony
233	19	19-8-122 to 19-8-169/25	SBI Colony
234	19	19-5-1 to 19-5-59E	Gandhi Puram
235	19	19-8-66A to 19-8-70/A	Dasari Mattam
236	19	19-8-71 to 19-8-82K5	Sivaji Nagar, Yadava Colony
237	19	19-8-83 to 19-8-83/G/2	Yadava Colony
238	19	19-8-116 to 19-8-118/B(1)	Yadava Colony
239	19	19-8-82/A to 19-8-82/A/10	Yadava Colony
240	19	19-8-82 to 19-8-90/h	Dasarimattam,
		to	Yadava Colony
241	20	20-3-53/A to 20-3-53/C4	Yerramitta
242	20	20-3-53/D to Repeat1&2ward	Yerramitta
243	20	20-3-53/G to Repeat1&2ward	Yerramitta
244	20	20-3-54 to 20-3-59/G	Yerramitta
245	20	20-3-70 to 20-3-71andBye-Numbers	Yerramitta
246	20	20-3-73/2 to End(onehouse)	Yerramitta
247	20	20-3-92 to 20-3-92/3A	Yerramitta
248	20	20-3-137 to 20-3-138/14	Pragathi Nagar
249	20	20-3-166 to 20-3-238	Ayyappa Colony
250	20	20-3-53/D to Repeat1&2	Yerramitta
251	20	20-3-53/G1 to Repeat1&2	Yerramitta
252	20	20-3-53/E to 20-3-53/F5	Yerramitta
253	20	20-3-53/G/1 to End(onehouse)	Yerramitta
254	20	20-3-60 to 20-3-69	Yerramitta
255	20	20-3-71/C to 20-3-71/D	Yerramitta
256	20	20-3-71/1 to 20-3-71/3	Yerramitta
257	20	20-3-72 to 20-3-73/A1	Yerramitta
258	20	20-3-74 to 20-3-91	Yerramitta
259	20	20-3-93 to 20-3-127/1	Yerramitta
260	20	20-5-1 to 20-5-95	Sanjay Gandhi Colony
261	20	20-5-99 to End(onehouse)	Sanjay Gandhi Colony
262	20	20-5-123 to 20-5-233	Sanjay Gandhi Colony
263	20	to	
264	20	20-5-250 to 20-5-476	Sanjay Gandhi Colony
265	20	20-5-481 to 20-5-484	Sanjay Gandhi Colony
266	20	20-5-486 to 20-5-494	Sanjay Gandhi Colony
267	20	20-5-496 to 20-5-499	Sanjay Gandhi Colony
268	20	20-5-502 to Onehouse	Sanjay Gandhi Colony
269	20	20-5-504 to 20-5-513/C	Sanjay Gandhi Colony
270	20	20-5-587 to 20-5-617	Sanjay Gandhi Colony
271	20	20-5-618 to Onehouse	Sanjay Gandhi Colony
272	20	20-5-619 to 20-5-650	Sanjay Gandhi Colony
273	20	20-5-735 to 20-5-747/B	Sanjay Gandhi Colony
274	20	20-1-1 to 20-1-202/G	Korlagunta
275	20	20-1-203 to 20-1-414	Korlagunta
276	20	20-1-420/D to End	Korlagunta
277	20	20-1-420/C to End	Korlagunta
278	20	20-1-420/G to End	Korlagunta
279	20	20-1-420/B to End	Korlagunta

280	20	20-1-421 to 20-1-438	Korlagunta
281	20	20-1-440 to 20-1-459/A	Korlagunta
282	20	20-1-460 to 20-1-460/A2	Korlagunta
283	20	20-1-460/1 to 20-1-460/5	Korlagunta
284	20	20-1-460/E to 20-1-460/F3C	Korlagunta
285	20	20-1-466 to 20-1-469/H	Korlagunta
286	20	20-1-490 to End	Korlagunta
287	20	20-1-470/1 to End	Korlagunta
288	20	20-1-470/1A to End	Korlagunta
289	20	20-1-470 to End	Korlagunta
290	20	20-1-470/57A to 20-1-470/57H4	Chandra Sekar Reddy Colony
291	20	20-5-234 to 20-5-249/B	Sanjay Gandhi Colony
292	20	20-5-477 to 20-5-480	Sanjay Gandhi Colony
293	20	20-5-485 to Onehouse	Sanjay Gandhi Colony
294	20	20-5-495 to Onehouse	Sanjay Gandhi Colony
295	20	20-5-500 to 20-5-501	Sanjay Gandhi Colony
296	20	20-5-503 to Onehouse	Sanjay Gandhi Colony
297	20	20-5-514 to 20-5-586	Sanjay Gandhi Colony
298	20	20-5-617/A to Onehouse	Sanjay Gandhi Colony
299	20	20-5-618/A to Onehouse	Sanjay Gandhi Colony
300	20	20-5-651 to 20-5-734	Sanjay Gandhi Colony
301	20	20-1-415 to 20-1-416/18/C46	Subash Nagar
302	20	20-1-417 to 20-1-417/5	Subash Nagar
303	20	20-1-416/100 to 20-1-416/103	Subash Nagar
304	20	20-1-439 to 20-1-439/C	Subash Nagar
305	20	20-1-420/A to 20-1-420/A5	Subash Nagar
306	20	20-1-420/B to 20-1-420/B4	Subash Nagar
307	20	20-1-420/D2 to 20-1-420/D3	Subash Nagar
308	20	20-1-470/1 to 20-1-470/57	C.S.R. Colony
309	20	20-1-470/57I to 20-1-470/96	C.S.R. Colony
310	20	20-1-470/97 to 20-1-470/153D	Navodaya Colony
311	20	20-4-1 to 20-4-6N	Kothapalli
312	20	20-4-7 to 20-4-7C2	Kothapalli
313	20	20-4-8 to 20-4-43/C	Kothapalli
314	20	20-1-460/D to 20-1-460/D5	Korlagunta
315	20	20-1-460/B to 20-1-460/B2	Korlagunta
316	20	20-1-460/C to 20-1-460/C6	Korlagunta
317	20	20-1-461 to 20-1-465	Korlagunta
318	20	20-1-469/D to 20-1-469/E	Korlagunta
319	20	20-1-471 to 20-1-472/5H4	Korlagunta
320	20	20-5-95A to 20-5-98	Sanjay Gandhi Colony
321	20	20-5-100 to 20-5-122/B1	Sanjay Gandhi Colony
322	20	20-4-7 to End	Kotha Palli
323	20	20-4-7/1 to 20-4-7/6/2	Kotha Palli
324	20	20-4-7/C3 to 20-4-7/H5	Kotha Palli
325	20	20-2-471 to 20-2-548	Maruthi Nagar
326	20	20-2-548/1 to End	Maruthi Nagar
327	20	20-2-548/A to End	Maruthi Nagar
328	20	20-2-548/2 to End	Maruthi Nagar
329	20	20-2-548/H to End	Maruthi Nagar
330	20	20-2-548/F to 20-2-548/F1	Maruthi Nagar
331	20	20-2-624/2/1 to End	Maruthi Nagar
332	20	20-2-549 to 20-2-575/B2	Maruthi Nagar
333	20	20-2-548 to	Maruthi Nagar
334	20	20-2-548/1 to	Maruthi Nagar
335	20	20-2-548/A to	Maruthi Nagar
336	20	20-2-548/F1 to	Maruthi Nagar
337	20	20-2-548/F to	Maruthi Nagar
338	20	20-2-548/E1 to	Maruthi Nagar
339	20	20-2-548/H2 to	Maruthi Nagar
340	20	20-2-548/H4 to	Maruthi Nagar
341	20	20-2-548/J to	Maruthi Nagar
342	20	20-2-548/D to	Maruthi Nagar
343	20	20-2-548/D2 to	Maruthi Nagar
344	20	20-2-548/D1 to	Maruthi Nagar
345	20	20-2-548/D4 to	Maruthi Nagar
346	20	20-2-548/E4 to	Maruthi Nagar
347	20	20-2-548/E3 to	Maruthi Nagar
348	20	20-2-548/E2 to	Maruthi Nagar

349	20	20-2-548/E to	Maruthi Nagar
350	20	20-2-548/L to 548/LEnd	Maruthi Nagar
351	20	20-2-548/A/1A to	Maruthi Nagar
352	20	20-2-548/K to 20-2-548/K2	Maruthi Nagar
353	20	20-2-548/I to 20-2-548/I1	Maruthi Nagar
354	20	20-2-548/I2 to	Maruthi Nagar
355	20	20-2-548/B to	Maruthi Nagar
356	20	20-2-548/C to	Maruthi Nagar
357	20	20-2-548/C1 to	Maruthi Nagar
358	20	20-2-548/A1 to	Maruthi Nagar
359	20	20-2-548/A1/A3 to	Maruthi Nagar
360	20	20-2-548/A2 to	Maruthi Nagar
361	20	20-2-548/A3 to	Maruthi Nagar
362	20	20-2-548/G1 to	Maruthi Nagar
363	20	20-2-548/J1 to	Maruthi Nagar
364	20	20-2-548/G to	Maruthi Nagar
365	20	20-2-548/1G to	Maruthi Nagar
366	20	20-2-548/G2 to	Maruthi Nagar
367	20	20-2-548/H to	Maruthi Nagar
368	20	20-2-548/D3 to	Maruthi Nagar
369	20	20-6-1 to 20-6-35	Maruthi Nagar
370	20	20-2-548/D to 20-2-548/D4	Maruthi nagar
371	20	20-2-548/E to 20-2-548/E4	Maruthi nagar
372	20	20-2-548/H1 to 20-2-548/H4	Maruthi nagar
373	20	20-2-548/A1 to 20-2-548/A18/B	Maruthi nagar
374	20	20-2-548/K to 20-2-548/K2	Maruthi nagar
375	20	20-2-548/I to 20-2-548/I1	Maruthi nagar
376	20	20-2-548/L to END	Maruthi nagar
377	20	20-2-548/G to 20-2-548/G3	Maruthi nagar
378	20	20-2-576 to 20-2-708	Maruthi nagar
379	20	20-2-548/A14 to	Korlagunta Maruthi Nagar
380	20	20-2-548/A7 to	Korlagunta Maruthi Nagar
381	20	20-2-548/A18/A to	Korlagunta Maruthi Nagar
382	20	20-2-548/A18/B to	Korlagunta Maruthi Nagar
383	20	20-2-548/A4 to	Korlagunta Maruthi Nagar
384	20	20-2-548/A10/A to	Korlagunta Maruthi Nagar
385	20	20-2-548/A13/B to	Korlagunta Maruthi Nagar
386	20	20-2-548/A13/C to	Korlagunta Maruthi Nagar
387	20	20-2-548/12 to	Korlagunta Maruthi Nagar
388	20	20-2-548/A13/D to	Korlagunta Maruthi Nagar
389	20	20-2-548/A13/A to	Korlagunta Maruthi Nagar
390	20	20-2-548/A11 to	Korlagunta Maruthi Nagar
391	20	20-2-548/A12 to	Korlagunta Maruthi Nagar
392	20	20-2-548/A5/C to	Korlagunta Maruthi Nagar
393	20	20-2-548/A5/D to	Korlagunta Maruthi Nagar
394	20	20-2-548/A6 to	Korlagunta Maruthi Nagar
395	20	20-2-548/A5/A to	Korlagunta Maruthi Nagar
396	20	20-2-548/A5 to	Korlagunta Maruthi Nagar
397	20	20-2-548/A7 to	Korlagunta Maruthi Nagar
398	20	20-2-548/A6/A to	Korlagunta Maruthi Nagar
399	20	20-2-548/A6 to	Korlagunta Maruthi Nagar

PUTTUR MUNICIPALITY			
ANNEXURE-I (See Rule-4)			
List of Old/ Existing Built-Up Areas/ Congested Areas/ Settlement/ Gram Khantam/ Abadi			
Sl.No.	Ward No.	Block No.	Name of the Lociality / Area
1	2	3	4
1	1		Aretamma Colony,
2	2		Besta St,
3	3		Kapu St,
4	4		Bazaar St,
5	5		Sengunda St,
6	6		Eswaragudi St,
7	7		Rajaji St,
8	8		Tirupati Road,
9	9		M B Road,
10	10		Rama Naidu Colony,
11	11		N G O Colony,
12	12		Swamy St,
13	13		Jandamanu St,
14	14		Shop St,
15	15		K N Road,
16	16		Puttur H/W,
17	17		RTC Colony,
18	18		Old Tirupati Road,
19	19		Anambattu Road,
20	20		Gandhi Nagar,
21	21		Dasarigunta St,
22	22		Othawada St,
23	23		Mahammed St,
24	24		Thatithopu St,
25	25		Seelakara St,
26	26		Old Weavers Colony,
27	27		Kamaraj Nagar,
28	28		Church Compound,
29	29		Thaimambapuram,
30	30		Kalyanapuram,
31	31		Netham,
32	32		Rachapalem,
33	33		Veerappa Reddy Palem,
34	34		Pillaripattu,
35	35		Cherlopalli,
36	36		Chinnaraju Kuppam,
37	37		Thimmapuram,
38	38		Nandimangalam,

ANNEXURE-II (See Rule-4)			
List of Areas Prohibited for High Rise Buildings			
Sl. No	Ward No.	Block No.	Name of the Locality / Area
1	2	3	4
1			All the areas as per Annexure-I

ADONI MUNICIPALITY			
ANNEXURE-I (See Rule-4)			
List of Old/ Existing Built-Up Areas/ Congested Areas/ Settlement/ Gram Khantam/ Abadi			
Sl.No.	**Ward No.**	**Block No.**	**Name of the Lociality / Area**
1	**2**	**3**	**4**
1	1		Khooni Mohalla
2	1		Bharpet
3	1		Syedpet
4	3		Pinjari Street
5	5		Thyliwada
6	5		Kilchinpet
7	6		Boyageri
8	6		Gokarjhanda (Except Master Plan Road)
9	7		Vaddegeri (Except Master Plan Road)
10	8		Kharibodi
11	8		Kummarigeri
12	9		Jamkhanwadi
13	9		Maratiwadi (Except Master Plan Road)
14	11		Brahmin Street And Kota Gudi
15	11		Chaman Katta
16	14		Khajipura (Except Master Plan Road)
17	14		Kagazwadi
18	15		L B Street
19	15		Chowkimutt
20	18		Santhapet (Except Master Plan Road)
21	18		Matkarwadi (Except Master Plan Road)
22	19		Fareed Saheb Mohalla (Except Master Plan Road)
23	19		Rajput Street
24	20		Venkanna Pet
25	21		M M Colony
26	21		Devi Nursing Home Back Side
27	21		Sai Baba Nagar (A.B.G. School Back Side)
28	21		Mandigiri
29	24		Karvenpet (Except Master Plan Road)
30	25		Havannapet (Except Master Plan Road)
31	26		Kowdalpet (Except Master Plan Road)

ANNEXURE-II (See Rule-4)			
List of Areas Prohibited for High Rise Buildings			
Sl. No	**Ward No.**	**Block No.**	**Name of the Locality / Area**
1	**2**	**3**	**4**
1			All the areas as per Annexure-I

ALLGADDA MUNICIPALITY			
ANNEXURE-I (See Rule-4)			
List of Old/ Existing Built-Up Areas/ Congested Areas/ Settlement/ Gram Khantam/ Abadi			
Sl.No.	Ward No.	Block No.	Name of the Lociality / Area
1	2	3	4
1	1	1 to 7	Lakshimpuram veedhi, Kandukur road east, Bhumabali reddy nagar, Palasagaram High schol road, ramalakshmi colony, Bhavanarayanaswamy veedhi, SV palace road, Lingamaiah veedhi, Ammavarisala veedhi, Peddanna veedhi.
2	2	1 to 2 & 4 to 10	Showkar pet south side, showkarpet North side, padmanabha rao street, C.P. Thimma Reddy street, sale vari veedi, Smashanam street, Ahobilam road, Ashraman street, Bangaraiah veedhi.
3	3	1 to 14	Hussain reddy veedhi, Thotapalle narasaiah veedhi, Geetha veedhi, Daffedarula veedhi, chinnapu reddy veedhi, Ayya Miyya veedhi, Revenue quarters, Ramalayam street, lakshmi reddy veedhi, vahab veedhi, Rahiman veedhi, Mouli veedhi Khudba veedhi, Muslim veedhi.
4	4	2 to 7	Police line veedhi, Ediga Ramaiah veedhi, Akbar veedhi, Elementary school veedhi, Valmiki veedhi, Church Maseed veedi.
5	5	1 to 8 & 10 to 11	Pathuri veedhi, Bramhaiah veedhi, Boya peta, Dudekulapeta, Golla veedhi, Mangali veedhi, Dastagiri reddy veedhi, Mount road, Church maseed street.
6	6	1 to 16	Church maseed street, mount road, bheegalavari street, sivaram talkies street, kabela street, sardhar street, Khadar Street, Pathamaseed Street, Muslim Street, Vijayapuri Street, Jamuna Street, Kambagiri Street, Chand Street, Saibaba Street, Mallikarjunasastry Street, Pama Street.
7	7	1 to 7	Nehru Street, Thomandru Street, Saw Mill Street, Balaji Street, Dr. Pulla Reddy Street, Jantharamanthar Street.
8	8	3 to 4 & 6 to 12	Dommara Colony, DCTO Ofice Street, Ramasubba Reddy Street, Adarsha Abhyudaya Colony, Lakshmi Narasimha Nagar, Yesunadhapuram Street, Srinivasa nagar, Dr. Samule Street, Chalamaiah Street, Vidyanagar, Gowrisankar Street.
9	9	1 to 14 & 16 to 17	Mikhel Street, Bhagyanandham Street, Sundaram Street, Linga Reddy Street, Gajjalanna Street, Daniyel Street, Chennu Colony, Benjimen Street, Dhanpal Street, Lingamdinne Road, Medari Street, Mount Road, Sagaram Street, Jeenagiri Ramaiah Street, harijanapeta, S.V. Nagar Viswaroopa Coloy.
	Palasagaram		
10	1		1-1 to 1-166 built up area old village
	Devarayapuram		
11	2-1		2-1-1 to 2-1-194 built up area old village.
12	2-2		2-2-1 to 2-2-40 & 2-2-41 to 2-2-177 built up area old village.
	Chintakunta		
13	1-1		1-1-1 to 1-1-100 built up area old village
14	1-2		1-2-1 to 1-2-127 built up area old village
15	1-3		1-3-1 to 1-3-129 built up area old village
16	4		4-1 to 4-125 built up area old village
17	5		5-1 to 5-113 built up area old village
18	6		6-1 to 6-159 built up area old village
19	7		7-1 to 7 end built up area old village
20	8		8-1 to 8-150 built up area old village
21	9		9-1 to 9-193 built up area old village
	Pedakandla		
22	1		1-1 to 169 built up area old village
23	2	1	2-1 to 2-270 built up area old village

24	3		3-1 to 3-144 built up area old village
25	4		4-1 to 4-247 built up area old village
26	5		5-1 to 5-40 built up area old village
27	6		6-1 to 6-2 built up area old village
Item(2)	All Notified slum areas and EWS Housing areas.		

ANNEXURE-II (See Rule-4)			
List of Areas Prohibited for High Rise Buildings			
Sl. No	**Ward No.**	**Block No.**	**Name of the Locality / Area**
1	**2**	**3**	**4**
1			All the areas as per Annexure-I

ATMAKUR MUNICIPALITY			
ANNEXURE-I (See Rule-4)			
List of Old/ Existing Built-Up Areas/ Congested Areas/ Settlement/ Gram Khantam/ Abadi			
Sl.No.	**Ward No.**	**Block No.**	**Name of the Lociality / Area**
1	**2**	**3**	**4**
1	1		Indira Nagar, Gareeb Nagar, Ekkalavya Nagar,Saibaba Nagar, Akkiraja Colony
2	2		Urban Colony, Veerabhadra Talkies area
3	3		Sreeram Nagar (Kappalakunta)
4	4		Peddapeerla Veedhi
5	5		Reddygari Veedhio
6	6		Ghandhi Park
7	7		Brahmana Veedhi
8	8		Thotageri
9	10		Vakitipeta
10	11		Rajaveedhi
11	12		Gollaveedhi
12	13		Pathasamithi
13	14		Sale veedhi
14	15		Zenda Arugu
15	16		Near Post Office Chityala veedhi
16	17		Ussainsa Nagar,Rahamath Nagar
17	18		Krishna Singh Veedhi
18	19		Kalla Veedhi
19	20		Kalla Veedhi
20	21		Lingaeth veedhi
21	22		Kothapeta
22	23		Ediga peta
23	24		Jumma Masidh
24	25		Kothapeta
25	26		Kothapeta
26	27		Ishlampeta, sidhapalle rastha
27	28		Kothapeta
28	29		Vadla Geri
29	30		SPG Palem
30	31		ABM Palem
31	32		Gollaveedhi

ANNEXURE-II (See Rule-4)			
List of Areas Prohibited for High Rise Buildings			
Sl. No	**Ward No.**	**Block No.**	**Name of the Locality / Area**
1	**2**	**3**	**4**
1			All the areas as per Annexure-I

BANAGANAPALLE MUNICIPALITY			
ANNEXURE-I (See Rule-4)			
List of Old/ Existing Built-Up Areas/ Congested Areas/ Settlement/ Gram Khantam/ Abadi			
Sl.No.	Ward No.	Block No.	Name of the Lociality / Area
1	2	3	4
			Banganapalle
1	1		Pendikanti Nagar, Bethamcherla road, NGOs colony, BC colony, Panchamapeta SC colony, Gopal nagar.
2	2		Karimbach, Dorakota, Khajiwada
3	3		Khajiwada, Rayalaseema Bank road, mangal peta, Ashtanam road.
4	4		Gounda Veedhi, Jungle Masque, Ashtanam Road.
5	5		Gounda Veedhi, Boyapeta.
6	6		Ashtanam, road, Kaman road, Old lPolice Station.
7	7		Andhra bank Road, Rice Mill Kottala, Petrol Bunk, Lal Masqu
8	8		SBI road, Mahaboob Talkies, LIC office, Edga Nagar, R & B guest house, Gutti road, RTC bus stand, Sub-Registrar office, R & B Office, MM court, Fire station.
9	9		Muthumaiah street, MLA Rami Reddy street, Syndicate Bank road.
10	10		Syndicate bank road, Jumma Masid street, Old Bus Stand, Rangarajupeta.
11	11		Rangaraju Street, Lali road, Anjaneyaswamy Temple road, Vegetable Market, Mutton market, Dasri peta.
			Bhanumukkala
12	12		Mangalavaram peta, Sivanandi Nagar, Pakkirpet, SC colony
13	13		Mangalavaram peta, Katika Veedhi, Tenkayaal Veedhi, Karran Mohiddin colony, Pedda Peerla Chavidi
14	14		Ammavarishala Veedhi, Margaz Masque, Aakula Veedhi, SC colony.
15	15		Injari Veedhi, Ammavarishala Veedhi, Karanamaiah Street, Peddamma Gudi Street.
16	16		Syed peta, Owk Mitta Urban colony, SRBC colony, Ram Bhupal nagar, Yerukalipeta.
17	17		Gollapeta, Chakalipeta, Mangalipeta, Naik Peta.
18	18		Jendaman street, sivalayam street
19	19		Yerukalastreet, ST Urban colony,Moulali konda veedi, Budugajangala veedhi, Vaddepeta, Telugupeta, Kolimipeta.
			Bathulurupadu
20	1		4-1 to 4-160 built up area old village
			Yagantipalli
21	1		1-1 to 1-180 & 2-1to 2-215 built up area old village.
			Rallakothur
22	1		1-1 to 1-170 built up area old village.
23	5		5-51 to 5-990 built up area old village.
24	6		6-1 to 6-50 built up area old village
25	7		7-30 to 7-60 built up area old village
26	8		8-1 to 8-25 built up area old village.
			Mittapalli
27	1		1-1 to 1-120, 1-201 to 1-210 built up area old village.
			Kapulapalli
28	1		1-1 to 1-90, built up area old village.
Item (2) : All notiied slum areas and E.W.S. Housing areas.			
ANNEXURE-II (See Rule-4)			
List of Areas Prohibited for High Rise Buildings			
Sl. No	Ward No.	Block No.	Name of the Locality / Area
1	2	3	4
1			All the areas as per Annexure-I

DHONE MUNICIPALITY			
ANNEXURE-I (See Rule-4)			
List of Old/ Existing Built-Up Areas/ Congested Areas/ Settlement/ Gram Khantam/ Abadi			
Sl.No.	Ward No.	Block No.	Name of the Lociality / Area
1	2	3	4
1	1	8-88/1 to 8-153/4	David Nagar
		9-1 to 9-106/8-1	Venkateswara Talkies area
2	2	9-107 to 9-179	Ajanta Hotel Street, Raghavendra Swamy Temple Street.
		10-1 to 10-71	
		12-1 to 12-120	
		12-121 to 12-17/20	Maruthi Nagar
3	3	10-72 to 10-143	Sweepers colony
		11-1 to 11-138/1	Ayyappa swamy Temle colony area
		13-1 to 13-130-6	Mutton market area
4	4	13-130-7 to 13-165/1	Pathapeta Hanuman nagar
		16-1 to 16-106	Leprosy colony
		17-1 to 17-192	Aravageri
5	5	14-1 to 14-115	Mala Veedhi
		15-1 to 15-123/1	Rajiv Nagar part
		18-1 to 18-164	Railway track side.
		20-1 to 20-35	
6	6	20-36 to 20-94/1	Rajiv Nagar
		21-110/2 to 21-197	Chakirevu Mitta
7	7	19-1 to 19-171/1	Kondapeta part
		21-1 to 21-110/1	Mutton market railway Track ,
		22-1 to 22-177/1	track area
8	8	23-1/1 to 23-156	Kondapeta part
		24-1 to 24-23	Hanumanvedi
9	9	24-108 to 24-159/20	Kondapeta part
		24-24 to 24-108/1	Jandakatta Street
		25-1 to 25-40-17	
10	10	24-159/21 to 24-182	Chigurumanupeta Part I
		26-1 to 26-155/1-4	
11	11	26-115/1-5 to26-162-1	Chigurumanupeta Part II
		25-40/60/1 to 25-120-1	Masjid Street
12	12	1-1 to 1-142	Dorapalle Road
		2-1 to 2-2/220-2	Bangaraiah Quarters
			Blind Colony
13	13	3-1 to 3-167/18	
		5-2 to 5-166	Ambedkar Nagar
		4-149-159 to 4-149-187	Loco Shed Area
		4-149-187 to 4-149-194	
		4-1 to 4-25	
14	14	4-26 to 4-110/4	Sunder Singh Colony
		4-149/58 to 4-149/158	
		4-193/3 to 4-289	
		4-149-16 to 4-149-22	
15	15	4-110/5 to 4-149/57	
		4-150 to 4-193-2	Nallagutta Area
		4-149/6 to 4-149/32-1	
		4-149/32-11/1 to 4-149/157	
16	16	6-1 to 6-148	
		7-1 to 7-38	Jangala Colony
17	17	7-39 to 7-358	Tarakarama Nagar (Left)
		7-354 to 7-496	Raja talkies backside area
18	18	8-1-101 to 8-1-167	Indira Nagar (Right)
19	19	8-1-167/12 to 8-1-168	Srinivasa Theatre area
		8-1-168/1 to 41141	
20	20	41122 to 8-1-100/2	K.E.Madanna Nagar
		37124 to 8-87/48	Indira Nagar (Left)

ANNEXURE-II (See Rule-4)
List of Areas Prohibited for High Rise Buildings

Sl. No	Ward No.	Block No.	Name of the Locality / Area
1	2	3	4
1	1	8-88/1 to 8-153/4	David Nagar
		9-1 to 9-106/8-1	Venkateswara Talkies area
2	2	9-107 to 9-179	ajantha Hotel street,
		10-1 to 10-71	Raghavndra swamy temle street
		12-1 to 12-120	
		12-121 to 12-17-20	
		12-121 to 12-17/20	Maruthi nagar
3	3	26573 to 10-143	Swwepers colony, Ayyappa swamy temple area
		41214 to 11-138/1	
		13-1 to 13-130/6	Mutton market area
4	4	13-130-7 to 13-165/1	Pathapeta Hanuman nagar.
		16-1 to 16-106	leprosy colony
		17-1 to 17-192	Aravageri
5	5	14-1 to 14-115	Mela Veedhi , Rajiv Nagar panchayat
		15-1 to 15-123/1	Railway track side.
		18-1 to 18-164	
		20-1 to 20-35	
6	6	20-36 to 20-94/1	Rajiv nagar
		21-110/2 to 21-197	chakrevu mitta
7	7	19-1 to 19-171/1	Kondapeta part, Mutton pmarket railway tract, tracaarea
		21-1 to 21-110/1	
		22-1 to 22-177/1	
8	8	23-1/1 to 23-156	Kodapeta part
		24-1 to 24-23	Hanumanveedhi
9	9	24-108 to 24-159/20	Kondapeta part, Jandakatta street.
		24-24 to 24-108/1	
		25-1 to 25-40-17	
10	10	24-159/21 to 24-182	Chigurumanupeta Part I
		26-1 to 26-155/1-4	Masjid Street
11	11	26-115/1-5 to 26-162-1	
		25-40/60/1 to 25-120-1	
12	12	1-1 to 1-142	Dorapalle road,
		2-1 to 2-2/220-2	Bangaraiah quarters
		to	Blind colony.
13	13	3-1 to 3-167/18	Ambedkar Nagar
		5-2 to 5-166	Loco shed area.
		4-149-159 to 4-149-187	
		4-149-187 to 4-149-194	
		4-26 to 4-110/4	
14	14	4-149/58 to 4-110/4	Sundersingh colony.
		4-149/58 to 4-149/158	
		4-193/3 to 4-289	
		4-149-16 to 4-149-22	
15	15	4-110/5 to 4-149/57	Nallagutta Area
		4-150 to 4-193-2	
		4-149/6 to 4-149/32-1	
		4-149/32-11/1 to 4-149/157	
16	16	6-1 to 6-148	Jangala colony
		7-1 to 14062	
17	17	14427 to 7-358	Tarakarama Nagar (Left), Raja Talkies backside area.
18	18	7-354 to 7-496	Tarakarama Nagar (Right), Srinivasa theatre area
19	19	8-1-101 to 8-1-167	
		8-1-167/12 to 8-1-168	
		8-1-168/1 to 8-20	
20	20	8-1 to 8-1-100/2	K.E> Madanna nagar
		8-21/1 to 8-87/48	Indira Nagar (Left)

GUDURU MUNICIPALITY			
ANNEXURE-I (See Rule-4)			
List of Old/ Existing Built-Up Areas/ Congested Areas/ Settlement/ Gram Khantam/ Abadi			
Sl.No.	Ward No.	Block No.	Name of the Lociality / Area
1	2	3	4
1	1		AVM Palem
2	2		Paigeri
3	3		Kothageri
4	4		Kota Veedhi & Kummara Veedhi
5	5		Sajeeva Nagar, Santhi Nagar, Telugu Veedhi
6	6		Daiyam Katta, Kota Veedhi
7	7		Raja Veedhi
8	8		Hakeem Veedhi
9	9		Singena Geri
10	10		Kondageri
11	11		Padakana Veedhi
12	12		Golla Veedhi, East BC Colony
13	13		Urukunda Veedhi
14	14		Kotal Veedhi
15	15		Boyageri

ANNEXURE-II (See Rule-4)			
List of Areas Prohibited for High Rise Buildings			
Sl. No	Ward No.	Block No.	Name of the Locality / Area
1	2	3	4
1			All the areas as per Annexure-I

KURNOOL MUNICIPAL CORPORATION			
ANNEXURE-I (See Rule-4)			
List of Old/ Existing Built-Up Areas/ Congested Areas/ Settlement/ Gram Khantam/ Abadi			
Sl.No.	Ward No.	Block No.	Name of the Lociality / Area
1	2	3	4
1	1	56 Peta	Sankara Matam Area
		58 Peta	Kuruva Veedhi
2	2	38 Peta	Patel Road
		65 peta	Subhedar Veedhi
3	3	15 Peta	Khadakpura
		39 peta	Vaddageri
4	4	40 Peta	Dharma peta (Slum)
		40 Peta	Banagaru Peta (Slum)
5	5	4 peta	Bangi Abdul Rahiman Street
		5 Peta	Rangaraju Veedhi
		5 peta	Dr. Gaffar Street
6	6	6 peta	Salekhan Veedhi
		7th & 8th peta	Srishabotla Veedhi
		7th peta	Khaleel Veedhi
		10 peta	Risaldar Veedhi (Chakali Veedhi)
		9th peta	Pinjari Veedhi
7	7	12 & 13 petas	Bhandari Street
		16 peta, 37 & 38 peta	Chotial Nabhi Sab Veedhi
8	8	53,54 & 66 peta	Jhumma majid area
9	9	19 peta & 54 part	Bandimetta (Notified Slums)
10	10	34 peta	Mangala Geri
		24 & 25	Gani Galli
		23 peta	Katika Veedhi
11	11	29 peta	Chunnam Veedhi
		1 peta	Main Bazar
		28 & 32 peta	Kummari Veedhi
12	12	26 peta	Chinna Market Road
		30 peta	Matam Veedhi
		31 peta	Chittari Veedhi
13	13	35 peta	Venkobarar Veedhi
		34 peta	Mangala Veedhi
		35 peta	Kummari Veedhi
14	14	36 peta	Chittari Veedhi
		36 peta	Nagula Katta
		36 part	Kummari veedhi part
15	15	32 peta	Shantha Kaseema Veedhi
16	16	2 peta	Elukuru Venkata Subbaiah Veedhi
		3 peta	Kalluru Dharwaja
17	17	46 peta	Aleemubarak Nagar (Slum)
		46 peta	Venkata Swamy Nagar (Slum)
18	18	46 peta	Budhawara Peta, Harijanawada
19	19	46 peta	Sanjany Gandhi Nagar, Giriprasad Nagar
		69 peta	Telugugeri, Kurva geri, Peddageri
		22 peta	Malageri
20	20	69 Peta	Joharapuram (Village)
21	21	87 Peta	K.C.Canal Bund
22	22	86 peta	Syamala Nagar, Somappa Colony
23	23	87 peta	Arundhathi Nagar
24	24	50 peta	Arora Nagar
25	25	49 peta	Sree ram Nagar
26	26	49 peta	Satya Nagar
		49 peta	Maddhur Nagar
		49 peta	Lakshmi Nagar
		49 peta	V.N. Nagar
27	27	50 peta	Devanagar, Jangala Veedhi
		50 peta	Birlagadda
28	28	46 peta	Chakali
		46 peta	Kammari geri
29	29	80 & 87	Mangali Geri
		80 & 87	old Kallur
30	30	10,11,80,81,12, 81 peta	Krishna Nagar, Abbas Nagar

31	31	-	-
32	32	81 peta	Shareef Nagar
33	33	77 peta	Mujafer Nagar
		77 peta	Industrial Estate
34	34	70 to 75 peta	old Kallur
35	35	76 & 77	Weaker Section Colony 1
36	36	76 & 77	Weaker Section Colony 2
		76 & 77	Weaker Section Colony 3
37	37	76 peta	Rajuv Nagar
		76 peta	Thilak Nagar
		76 peta	Jamapala Sivaiah Nagar
		51 peta	S.A.P.Camp
38	38	45 peta	Ashok Nagar
		45 peta	Pala Kottalu
		45 peta	Labour Colony
39	39	51 Peta	SAP Camp
40	40	51 peta	Indira Gandhi Nagar
		51 peta	P.V.N.R.Nagar
		51 peta	Challavari Veedhi
41	41	45 Peta	N.R.Nagar
		45 Peta	K.C.Canal
42	42	45 peta	Azumuddin Nagar
		45 peta	Bhagath Singh Colony
		45 peta	Sri Nagar Colony
43	42	45 peta	Babu Jagjeevan Ram Nagar
44	43	44 peta	Dharma peta (Slum)
45	44	44 peta	Roja Area (Slum)
46	45	40 peta	Bangaru peta
		40 peta	River View Colony
		40 peta	Bhagya Nagar
		40 peta	Medam Compound
47	46	40, 42, 41	Gowali Geri
		40, 42, 41	Nandyal gate
		40, 42, 41	Kothapeta slum
48	47	43 peta	-
49	48	41 peta	Kothapeta area
		41 peta	Kothapeta Police quarters
50	49	41 peta	Saibaba Sanjeevaiah Nagar
51	50	58,62,63 & 64 petas	Lal Bahadoor Sastry Nagar
		58,62,63 & 64 petas	S.Nagappa Nagar
		58,62,63 & 64 petas	Chithambar rao Veedhi
		62 peta	Mallikarjuna Veedhi

ANNEXURE-II			
List of Areas Prohibited for High Rise Buildings			
Sl. No	Ward No.	Block No.	Name of the Locality / Area
1	2	3	4
1	1	56 Peta	Roshanghat Veedhi
2	2	52 Peta	Nethaji Road
		67 & 68 Peta	Urban Bank Veedhi
		38 peta	38 peta
3	3	17 Peta	Coles Junior College
4	4	39 peta	Vaddageri
5	5	9 peta	Adoni Darwaja
		11 Peta	Osmania College Road
6	6	10 peta	S.L.Daaru Veedhi
7	7	-	-
8	8	54 peta	Potti Sri Ramulu Veedhi
9	9	-	-
10	10	-	-
11	11	27 Peta	Setty Basappa Veedhi
12	12	30 Peta	Pakala Veedhi
		26 Peta	Main Street
13	13	36 peta	Pakala Veedhi
14	14	36 peta	Kummari Nagamma Majid
15	15	32 peta	Shamta Khasheem Saheb Veedhi
16	16	-	-
17	17	46 peta	Wood Land
		46 peta	Kallur Darwaja Road
18	18	-	-
19	19	46 peta	Chanikyapuri Colony
		46 peta	Sapatagiri Nagar
		48 Peta	Aditya Nagar
		46 Peta	
		22 Peta	
		69 Peta	Joharapuram
20	20	-	-
21	21	-	-
22	22		Housing Board Colony
			Mahalaxmi Colony
		86 Peta	Doctors Colony
		86 Peta	N.G.O Colony
23	23	87 peta	Kallur
24	24	50 peta	C Camp Quarters
		50 peta	B Camp Quarters
25	25	49 peta	C Camp Area
26	26	49 peta	C Camp
27	27	50 peta	B Camp Quarters
		50 peta	
		50 peta	
28	28	46 peta	
29	29	-	-
30	30	10,11,80,81,12, 81 peta	
31	31	-	-
32	32	-	-
33	33	-	-
34	34	-	-
35	35	-	-
36	36	76 peta	Sampath Nagar
37	37	51 Peta	
38	38	45 peta	Ramalingeswar Nagar
		45 peta	
		45 peta	Venus Colony
		45 peta	Venkataramana Colony
39	39	51 Peta	
40	40	51 peta	
41	41	45 Peta	
		45 Peta	Ashok Nagar
		45 Peta	

42	42	45 peta	
		45 peta	
		45 peta	Prem Nagar
		45 peta	Venkataramana Colony
43	43	44 peta	Prakash Nagar
44	44	44 peta	Prakash Nagar
45	45	40 peta	Rebal Veedhi
46		40 peta	
47	46	40 Peta	Eswar Nagar
		40 Peta	Bhagya Nagar
		41	
48	47	43 peta	Narasimha Rao Peta
		43 peta	Kotha Peta Area
		43 peta	
		43 peta	
		43 peta	M C Upper Primary School
49	48	41 peta	
50	49	41 peta	
51	50	58 Peta	Pand Krishna Rao Veedhi
		62 peta	
52			All the areas as per Annexure-I

NANDIKOTKUR MUNICIPALITY			
ANNEXURE-I (See Rule-4)			
List of Old/ Existing Built-Up Areas/ Congested Areas/ Settlement/ Gram Khantam/ Abadi			
Sl.No.	**Ward No.**	**Block No.**	**Name of the Lociality / Area**
1	**2**	**3**	**4**
1		1	Kota Veedhi
2		2	Kota Veedhi
3		3	Kota Veedhi
4		4	Chakalipeta, Abutting Alluru Road,
5		5	Abduting Alluru Road
6		6	Karuvapeta
7		7	Ramulavariveedhi Street.
8		8	Kuruvapeta
9		9	Ramulavariveedhi Street, Peerla Chavadi Lane
10		10	Badugaveedhi, Medhar Lane, MPP school back side.
11		11	Taluq office road and beside roads.
12		12	Near Sai baba peta
13		13	Lingam veedhi, by the side of panchayat raj office lane
14		14	Dr. Thirupathi Reddy lane, Mazeed lane, sweet Ebraheem lane.
15		15	Pedda Faqruddin Lane, Srinivasulu House Lane, D. Dastagiri, Siddaiah lane, Chenchu colony, Dasari peta, (near sai Baba peta)
16		17	Chakaliveedhi
17		18	Shikaripeta
18		19	Darga Lane
19		20	Saimyala Lane
20		22	Kottakummaripeta, Ganimiya lane
21		23	Manju Hotel House lane, IPinjari peta
22		24	A.B.M. Palem, Karremma gudi lane, Maddigatla peta
23		25	A.B.M.Palem, Maddigatla peta
24		26	Indira Nagar, CSI palem Church street.

ANNEXURE-II (See Rule-4)			
List of Areas Prohibited for High Rise Buildings			
Sl. No	**Ward No.**	**Block No.**	**Name of the Locality / Area**
1	**2**	**3**	**4**
1			All the areas as per Annexure-I

NANDYAL MUNICIPALITY			
ANNEXURE-I (See Rule-4)			
List of Old/ Existing Built-Up Areas/ Congested Areas/ Settlement/ Gram Khantam/ Abadi			
Sl.No.	**Ward No.**	**Block No.**	**Name of the Lociality / Area**
1	2	3	4
1	1		Sharaff Veedhi(Byrmal Street) Harijanawada, Main Bazaar, R.T.C.Bustand, Tallipeeru Veedhi, Gandhi Chowk, I Town Policestation, Sunkulamma Street, Anjaneyaswami Temple Area, Beemavaram Road Area.
2	2		Mullanpeta, Kalpana Centre, Daily Market, Chand Bada, Sreedevi Nagar, Farooq Nagar.
3	3		Byrmal Street area, Roja Kunta,
4	4		M.H. School area, Satram Badi area, M.H.School area.
5	5		Sunkumallam Street, Main Road, Bygari Street.
6	6		Rangaraju Veedhi, Pappulabatti Bazaar.
7	7		Nadigadda, Main Bazaar Area, Thotti Bavi area, Masjid area, Kalikamba Temple, Kota Street, Rangaraju street.
8	8		Madar Peta
9	9		Panpatti Veedhi
10	10		Telugupeta
11	11		Sangapeta
12	12		Chakalipeta, Peddabanda
13	13		Neeli Veedhi
14	14		Anakala Veedhi
15	15		Bolledula Veedhi, Basavanna Temple
16	16		Anjuman Masque area, Opp:RTC Line.
17	17		Park Road, Farooq Nagar, Jagajjanani Nagar
18	18		Bonthala Veedhi
19	19		Medam Vari Veedhi
20	20		Sanchipattala Veedhi
21	21		Uppari Peta, Ambedkar Nagar.
22	22		Kota Street
23	23		Zandaman Street
24	24		Harijanawada, P.V. Nagar.
25	25		Danielpuram, Saleem Nagar, Ramanatha Reddy Nagar Area, Nandamuri Nagar, Y.S. Nagar.
26	26		Mission Compound, Gnanapuram, Viswasapuram, Vijayapuri Nagar, Haneef Nagar, Royal Compound, Syam Nagar, V.C. Colony.
27	27		Moolasagaram, Islampeta, Gollapeta.
28	28		Noonepalli Harijanawada, Edigapeta, Maruthi Nagar, Ekalavya Nagar, Viswa Nagar, Tikkaswamy Durga, Saibaba Nagar, Vidya Nagar, Devanagar, Sadiq Nagar, Nivarthi Nagar, Kolim Peta.
29	29		Tekke, Harijanawada, Sunkulamma Temple Area, Vivekananda, Suddula Peta, Saraswathi Nagar.
30	30		Revenue Quartors, Gopal Nagar, Bogguline Area, Gandhi Nagar, Vijayanagar Colony.

ANNEXURE-II (See Rule-4)			
List of Areas Prohibited for High Rise Buildings			
Sl. No	**Ward No.**	**Block No.**	**Name of the Locality / Area**
1	**2**	**3**	**4**
1			All the areas as per Annexure-I

YEMMIGANUR MUNICIPALITY			
ANNEXURE-I (See Rule-4)			
List of Old/ Existing Built-Up Areas/ Congested Areas/ Settlement/ Gram Khantam/ Abadi			
Sl.No.	**Ward No.**	**Block No.**	**Name of the Lociality / Area**
1	**2**	**3**	**4**
1	1		Venkatapuram
2	2		Kummara Geri, Uppara Peta, Erukala Geri
3	3		Uppara Veedi, Kota Veedi
4	4		Boddarai Veedi, Kota Veedi
5	5		Chinna bavi Street
6	6		---
7	7		Mallari Street, Machani Street, Sandugudi Area
8	8		---
9	9		---
10	10		Mallari street, Machani Street, Kondaveeti Prantam Area, Jain Temple Area
11	11		Maremma Kond Area, Ganganna Majid Area
12	12		--
13	13		--
14	14		Chinna Kamela, Katike Street
15	15		--
16	16		Hasan Beig Street, Chunnambatti Street
17	17		Choudeshwari Temple Area, Hafeez Majid Area
18	18		---

ANNEXURE-II (See Rule-4)			
List of Areas Prohibited for High Rise Buildings			
Sl. No	**Ward No.**	**Block No.**	**Name of the Locality / Area**
1	**2**	**3**	**4**
1			All the areas as per Annexure-I

BADVEL MUNICIPALITY			
ANNEXURE-I (See Rule-4)			
List of Old/ Existing Built-Up Areas/ Congested Areas/ Settlement/ Gram Khantam/ Abadi			
Sl.No.	Ward No.	Block No.	Name of the Lociality / Area
1	2	3	4
1	-		Grama Netham Poramboku
2	-		Grama Netham Poramboku
3	-		Grama Netham Poramboku
4	-		Grama Netham Poramboku
5	6		Vallelavaripalle
6	6		Madakalavaripalle
7	6		Madakalavaripalle H.W.
8	17		Sastri Nagar
9	12		Sumithra Nagar
10	12		Sumithra Nagar
11	13		Sri Krishna Devaraya Nagar
12	13		Sri Krishna Devaraya Nagar
13	19		Bhava Narayana Nagar
14	19		Bhava Narayana Nagar
15	19		Bhava Narayana Nagar
16	19		Bhava Narayana Nagar
17	19		Bhava Narayana Nagar
18	19		Bhava Narayana Nagar
19	19		Bhava Narayana Nagar
20	19		Bhava Narayana Nagar
21	15		N.G.Os Places
22	15		N.G.Os Places
23	7		Marthoma Nagar
24	1		Veerareddy to Eguva Bramhin Street
1	4		Ashok Nagar Total Area
2	3		Rooprampeta
3	24		Gudem - Main
4	24		Gudem - H.W.
5	25		Pedda Agharam
6	25		Chinna Agharam
7	20		Pangavandlapalle
8	20		Tothigaripalle
9	20		Bovillavaripalle
10	14		Chennakesampalle
11	14		Bakarapeta
12	19		Chennampalle
13	14		Chemuduru
14	13		Rikshaw Colony
15	14		Vidya Nagar
16	14		Vidya Nagar

ANNEXURE-II (See Rule-4)			
List of Areas Prohibited for High Rise Buildings			
Sl. No	Ward No.	Block No.	Name of the Locality / Area
1	2	3	4
1			All the areas as per Annexure-I

JAMMALAMADUGU MUNICIPALITY

ANNEXURE-I
(See Rule-4)

List of Old/ Existing Built-Up Areas/ Congested Areas/ Settlement/ Gram Khantam/ Abadi

Sl.No.	Ward No.	Block No.	Name of the Lociality / Area
1	2	3	4
1	9		Chakali Street
2	10		Gadda Street
3	5		Kota Street
4	6		Opp Post Office line
5	7		IL School street
6	4		Lakshumama Chenu
7	20		Sai ram back side street
8	21		Nagalakatta line
9	26/2		Gadda Street
10	26/3		Kannelur old area
11	13		Chakalai Street
12	13		Nashyam Vari Street
13	11		Gadiyaram Street
14	12		Marivadi street
15	15		Chenna Bsappa Street
16	16		Mucharla Street
17	16		Kakitala Street
18	16		Mayalur Nagi Reddy street
19	19		Jelil Street

ANNEXURE-II
(See Rule-4)

List of Areas Prohibited for High Rise Buildings

Sl. No	Ward No.	Block No.	Name of the Locality / Area
1	2	3	4
1	9		Chakali street
2	10		Gadda Street
3	4		Lakshumma Chenu
4	26/2		Gadda Street
5	13		Nashyam street
6	11		Gadiyram street
7	15		Chennabasppa Street
8	16		Muchrla Street
9	12		Maravadi street
10	19		Jelil Street
11	5		Kota Street
12	20		Sai Ram Theatar back Side Area
13			All the areas as per Annexure-I

KADAPA MUNICIPAL CORPORATION			
ANNEXURE-I (See Rule-4)			
List of Old/ Existing Built-Up Areas/ Congested Areas/ Settlement/ Gram Khantam/ Abadi			
Sl.No.	Ward No.	Block No.	Name of the Lociality / Area
1	2	3	4
1	1		Yerramukkapalli, Gandhi Nagar, Sunnapurallapalli, Chintalappa Street, Poosala Street, Kandipalem, Rajiv Gandhi Nagar
2	2		Nagarajupeta, Sri Hari rao Street, Baroda Street, Beldari Street
3	3		Nayak Saheb Street, Raja Reddy Street, Siva Lingam Palli Street
4	4		Sion Puram, Mruthyunjayakunta, Ayyaswamipillai Street, Badulla Makan Street, Gunta Bazar
5	5		Puta Anjaneya Swami Street, Kaluva Gadda Street, Kota Gadda Street, J Ramachandra Rao Street, Matam Street, Duvvur Venkatarao Street, Bramhana Street
6	6		G. Rama Rao Street, Raja Khan Bag Street, G. Chalamaiah Street, Sale Nagaiah Street, Mattipedda Puli Street, KMH Street
7	7		ChilakalaBavi Street, Trunk road East West parts, Narasa Ramaiah Street, Mochempeta, Dastagiri Peta, Gurrala Gadda, Malani road
8	8		Almaspeta, vakkalapeta, Guduru HW, Saipeta 8th Ward, Agadi West Part, Hyth Khan Street, Bellary Road lanes, Agadi Road lanes, Saipeta lanes, Agadi Main road lanes, Jagadam Palli, Srinivasa hall lane, Yanadi Colony, Kattakinda HW
9	9		Saipeta 9th Ward, Katta Kinda HW, Agadi East Part
10	10		Bellam Mundy Street, Jyothi Govindappa Street, Koncharapeta, Trunk road west Part South Part, Bellary road east part, Jangam erukalappa Street
11	11		Bellary road North & South, Sundara rama Badrappa Street, Muthyala Ramaiah Stret, Chinna Besta Street, Abdul Nabi Street, Giddangi Dada Saheb Street, Habibullah Street, Kummara Kunta Street, Mangala Rama Badrappa Street, Mandi Madara Saheb Street
12	12		Kanchara peta Medara Street, Ammavarisala Street, Hanumappa Street, Manchala Ramappa Street, Puruturi Gangaiah Street, Medara street, Medara Street Lanes, Potti Sri Ramulu Street
13	13		BKM Street, Trunk road West, Muni Rao Street Part, Lohar Pakruiddin Street, Chittor Kondappa Street, Rahamathulla Street
14	14		Pedda Besta Street East part, YV Street West Part, Sangam peta South Part, Mahaboob Nagar, Nakash, Gopala Swami Street, Sangam Peta, Sangam Peta (South Part), Mahaboob Nagar East Part, Y.V Street Near Pedda Darga, Kummara Kunta
15	15		Y.V Street East Part, Pedda Besta Street West Part, Bellary road South part, Bandlamitta Street, Gajula Street, Habibulla Street.
16	16		Sunnapurallamitta, Masapeta, Ghouse Nagar, Gajula Street, DC Road east, Masapeta
17	17		Old Market area, Bogara Street east & west, Khadar Khan Masid, Sadu Chenganna Street, Habibulla Street, Y.V Street west, Mandi Bazar, BKM Street, Habibulla Street
18	18		Habibulla Street, Sathuchenganna Street, Chinnaraya street, Haji Gafoor Khan Street, Gandla Street, Gurram Chennaiah St.,
19	19		Varasumiah Street, SF Street, Houje Street, RKM Street, Haji Gafoor Saheb Street, Jumma Masid Street, Old RR Lane, SF Street, Ahamed Street, Horonmiah Street
20	20		Mastanvalli street west, Akula Street, BKM Street, Vasubala Chinnaiah Street, Scout Hall lane, Namaste Board lane south, Balaji peta, R.K Nagar, National Lodge Back side
21	21		Palem Palli Street, Veera Swami Mundy Street, Gunta Bazar, NFS Street, Murugeshan Compound
22	22		Patha Kadapa
23	23		Patha Kadapa
24	24		Patha Kadapa
25	25		Patha Kadapa, BC Colony
26	26		Modemedi Palli
27	27		Modemedi Palli
28	28		Model SC Colony
29	29		Nana Palli, Yanadi Colony

30	30		Ukkayapalli, BR Colony
31	31		Devuni Kadapa
32	32		Devuni Kadapa
33	33		Gandi, Patha Kadapa HW, Venkateswarapura,. Yanadi Colony
34	34		Devuni Kadapa
35	35		Devuni Kadapa HW
36	36		Chinnachowk SC Colony & ST Colony, Ashok Nagar
37	37		Vidhyut Nagar-2, Vadde Colony, Chalamareddy Palli, Kondayapalli, Nehuru Nagar, Vidhyut Nagar
38	38		Buddayapalli, Tilak Nagar, Babu Jagjeevanram Colony, Sri ram Nagar, ramanjaneyapuram, Swaraj Nagarm
39	39		Pakkirpalli SC Colony
40	40		Mutharasupalli HW, Bharath Nagar
41	41		Ghouse Nagar, Ganjikunta Colony 2
42	42		Mruthyunjayakunta
43	43		Chandramouli Nagar, Niranjan Nagar colony
44	44		Chemmumiahpeta ST Colony
45	45		Chemmumiahpeta HW
46	46		Kagithalapenta
47	47		Kagithalapenta, ravindra Nagar
48	48		Kagithalapenta, ravindra Nagar main road, devasena street, saibaba Sreet, Santhaiah Street, Law College Street, Vilasam Bhavi Street, Ramunidevalaya Street, Old Panchayat office Street, Katikapari street, Chapati gangireddy street
49	49		Ravindra Nagar main road,venkateswara school street, mahila vikas street, shamiriya nagar, akkayapalli
50	50		Vatikalla HW, Ravindra Nagar main road old Post Office opposite street
51	51		Ravindra Nagar South Side, Old Panchayat Office, New Sarada School Street
52	52		Nabikot South and North, Kummari Street, Jadala Swami Street
53	53		Nabikota Main lane norht side, kummari street
54	54		Kagithalapenta, Nabikota Main road
55	55		Chowtapalli
56	56		Pedda Chowtapalli
57	57		Darga mitta
58	58		Sastry Nagar, Tilak Nagar
59	59		Sanjeev reddy nagar, Tilak Nagar
60	60		Nabikota North side
61	61		Nabikota west side, Maratikunta
62	62		Marati Street
63	63		Mathabhavani School Lane
64	64		Mariyapuram
65	65		Arundhathi Nagar, Mariyapuram
66	66		Ambabhavi Nagar, Mariyapuram
67	67		Mariyapuram Cooli Sangam Street
68	68		Old Alamkhan Palli
69	69		Old Alamkhan Palli
70	70		Ranithota, Dastagiri Peta
71	71		Alamkhanpalli HW
72	72		Kamalanagar Dandu HW
73	73		Guduru HW
74	74		Lohiya Nagar
75	75		NO Built up areas
76	76		Ramarajupalli, Ramachandrapuram, Budagajangam Colony
77	77		Nandyala Nagi Reddy Colony, ASR nagar, Achari Colony
78	78		Yanadi Colony, Achari Colony
79	79		Yanadi Colony, Achari Colony
80	80		Palempalli, Rukavari palli, Bachumpalli, Khader Khan Kottalu
81	81		Dandu HW
82	82		Dandu HW
83	83		Putlam Palli
84	84		Vadee Palli
85	85		Saroji Nagar, Cherlopalli
86	86		Sivanandapuram
87	87		Faridanagar
88	88		Angadi Street
89	89		Angadi Street, Baba Nagar, CMR Palli
90	90		Chinnamusal Reddy Palli, NR Mattam, NR Mattam HW

91	91		Sankarapuram, Mamillapalli, Mamillapalli HW, PMR Palli, Konnepalli HW
92	92		Nayanavaripalli, Srinivasapuram, NTR Colony, Balijapalli
93	93		Somayajulapalli ST Colony, Saibaba Nagar, ST Colony, BS Thanda, Subbannagari Palli
94	94		RPS Nagar, Ramachandraiah Colony, Mery nagar
95	95		Telugu Ganga Project Colony
96	96		Utukuru, Utukuru HW
97	97		Utukuru HW, Sai nagar, Mulavanka
98	98		Agraharam, Agraharam ST Colony, Venkatagari Palli, Polugari Palli, Polugari Palli HW, Somavandla Palli
99	99		Proffessors Colony
100	100		Viswanathapuram
101	101		Viswanathapuram HW, Valmiki Nagar, JV nagar, Swami Nagar
102	102		Bayana palli
103	103		AL Colony
104	104		Narasaramaiah Gai Palli, Narasaramaiah Gari Palli HW
105	105		Rayalapanthulapalli
106	106		Chinnamachupalli HW
107	107		Chinnamachupalli
108	108		Chinnamachupalli
109	109		Jangamreddy Palli HW
110	110		Jangamreddy Palli HW, Jangamreddypalli
111	111		Maruthi Nagar, Chinnamachupalli
112	112		Seshaiahgaripalli

ANNEXURE-II (See Rule-4)			
List of Areas Prohibited for High Rise Buildings			
Sl. No	**Ward No.**	**Block No.**	**Name of the Locality / Area**
1	**2**	**3**	**4**
1			All the areas as per Annexure-I

MYDUKUR MUNICIPALITY			
ANNEXURE-I (See Rule-4)			
List of Old/ Existing Built-Up Areas/ Congested Areas/ Settlement/ Gram Khantam/ Abadi			
Sl.No.	Ward No.	Block No.	Name of the Lociality / Area
1	2	3	4
1	1	1 to 7	Old Town
2	2	1 to 2 & 4 to 10	Old Town
3	3	1 to 14	Old Town
4	4	2 to 7	Old Town
5	5	1 to 8 & 10 to 11	Old Town
6	6	1 to 16	Pale Mabu street, Masjeed street, back side of Girls hostel, Mulabate veedhi.
7	7	1 to 7	Chakalaviveedhi, Akula mabu street, Raja reddy street.
8	8	3 to 4 & 6 to 12	Cheevupost side street, Menaka nursing home lane, Mahadevarayaa temple street, Burgala street.
9	9	1 to 14 & 16 to 17	Parvathi nagar, mehaboob Nagar, Seeba ramanjaneya ram, Gandhi nagar, Anakule street,
10	10		williams nagar, Arundathi nagar, chowdeswari nagar, Vena vijayanagar colony, venkatasubbamma nagar,
11	11		Darga sandu.
12	12		Kamalamma sandu, Haji sandu, Nandicollege, street, Pedidreddy street,
13	13		Phailman mohammad street, paiter dastagiri street, shain mohammad bee lane.
14	14		Mangaliveedhi, Mahesh angadi street, saradavidya mandi lane, opp to devi hall
15	15		Guntur kottalu, saraswathi peta, sarayapalli.
16	16		Pathapalem, gaddamalavada
17	17		Mamillapalli, Kottapalli, Srinagaram
18	18		Venkatapuram Yaparalapalli
19	19		Gallapalli, Thimmayapalli, Krishnapuram, bandivaripalli
20	20		Bommayapalli.

ANNEXURE-II (See Rule-4)			
List of Areas Prohibited for High Rise Buildings			
Sl. No	Ward No.	Block No.	Name of the Locality / Area
1	2	3	4
1			All the areas as per Annexure-I

PRODDATUR MUNICIPALITY			
ANNEXURE-I (See Rule-4)			
List of Old/ Existing Built-Up Areas/ Congested Areas/ Settlement/ Gram Khantam/ Abadi			
Sl.No.	Ward No.	Block No.	Name of the Lociality / Area
1	2	3	4
1	1		Bollavaram Harizanawada, Bollavaram, Christain Colony, Buddayapalli Slum, Mahashri Vidya Mandir Slum
2	2		Weaker Section 2 nd Ward, Buddaya Palli, Rajaka Wada, Slum, Prakash Nagar, Bakara Peta
3	3		A.B.M.H. School, Harizana Wada, Sai Kuteer Road, Ram Nagar Slum, P.W.D. Office Road, Sarswathi Vidyamandir Road, Sunnapu Batti Street, Holmespeta
4	4		Venkateswarala Peta, Kummara Kottala, Geethasramam Road, Super Bazer Road Babuji Nagar Slum, Khalahastaiahgari Street, Nehru Road, Hanuman Nagar Slum
5	5		Geethasramam Road, Sambaiahgari Street, Vinayaka Nagar, Vijayanagaram Street, Devanga Peta, Sree Ram Nagar, Chetta Kottala, Dorasani Palli Road, Dommara Wada Slum
6	6		Vinayaka Nagar, Arts College Road Slum, Ahammad Nagar
7	7		Sreenivasa Nagar, Subbi Reddy Kottala, Harizana Wada Behind, N.G.O. Home, Indira Nagar Slum, Seavengar's Colony Slum, Sanjeevaiah Nagar Slum, Andhra Kesari Road Slum, Saraswathi Vidyamandir Road
8	8		Medara Street, Godown Street, Swayam Sevak Street, Sree Ramula Peta
9	9		Medara Street, Sankara Rao Street, Mannoji Rao Street, Sree Ramula Peta
10	10		K.K. Street, Sarvakatta Street, Islam Puram Street, Kompala Pullanna Street, Gangamma Temple Street,
11	11		Sundaracharla Street, Durta Bazer, Mokshagundam Street, Jadalagari Street, Main Bazer, Khader Hussain Mosque Street
12	12		Kota Street, Gangamma Temple Street, Rajabata Street
13	13		Tirumalanayuni Peta Rajabata Street, Tyagaraja Street, Vedurla Bazar, Vengala Reddy Peta
14	14		Dastagiri Peta Slum, S.P.G. Compound, Alibaig Street, Pandu Ranga Swamy Temple Street
15	15		Zinna Road, Modam Palli
16	16		Nadimpalli Street, Tirumalanayuni Peta, Nadimpalli Street
17	17		Gowramma Katta Street, Subbi Reddy Gari Street, Nadimpalli Street Slum
18	18		Main Bazar, Rangaiahgari Street, Gowramma Katta Street, Seshugari Street, Old Market Area
19	19		Kanyakaparameswari Temple Street, Joke Palem Area Rameswara Peta, Balobigari Street
20	20		Adarsha Colony, Harizana Wada, Back side Government Hospital, Modampalli Harizana Wada, Modampalli Slum, Housing Colony, Modampalli Harizana Wada, North & South Slum, Yellamma Temple Slum
21	21		Khader Hussain Mosque Street, Yerraguntla By-pass Road, I Town Police Station Area, Hyder Khan Street
22	22		Kotta Kottala, Ashar Sharief Street
23	23		Sundaracharala Street, Islam Puram Street, Gangamma Temple Street
24	24		Makka Mosque Street, Subbaiah Hospital Line
25	25		Matti Maseed Street, Santha Kumari Street, Usman Mosque Street, Saibaba Kottala Slum
26	26		Bangaraiah Kottala Slum, Guruvaiah Thota, Mitta Madi Slum
27	27		Rameswaram Christain Colony Slum, Weaker Section Colony Rameswaram, Vasantha Peta Harizana Wada Slum
28	28		Rameswaram, Dinnemeedi Kottala Slum, Munaiah Kottala Slum

ANNEXURE-II (See Rule-4)			
List of Areas Prohibited for High Rise Buildings			
Sl. No	Ward No.	Block No.	Name of the Locality / Area
1	2	3	4
1	24		Vasantha Peta

2	22		Lay - Out, Moulana Azad Street Lain No.1 to 4, Rajaji Road
3	22 , 25		Rajaji Road
4	3,4,5,6,8 & 10		Gandhi Road Both Sides
5	1,2,3 & 7		J.N.F. Road Both Sides
6	3		Y.M.R. Colony
7	2		Sastry Nagar
8	7		Korrapadu Road
9	7,10 & 9		Sivalayam Street
10	9,12,14, 15		Mydukur Road
11	13		Light Palem Junction
12	15		Zinna Road
13	15		Balaji Nagar Extention
14	20 & 15		Modampalli By - pass Road
15	20		Yerraguntla By - pass Road
16	21		L.I.C. Back, Chakali Area
17	27		Vemana Nagar Extention Area
18	26		Mitta Madi Extention (Rameswaram to Bollavaram)
19	28		Sri hari Nagar (Near Municipal Water Works Road Rameswaram)
20	5		Kesava Nagar Extention Area
21	4		Hanuman Nagar Extention Area
22	5		Mahendra Nagar Extention Area
23	3		Sai Kuteer Road Extention Area
24	3		Sunnapuvari Street Extention Area
25	2		Y.S. Nagar Extention Area
26	7		Sreenivasa Nagar Extention Area
27	26		Nagendra Nagar
28	7, 9		Kandula Bala Narayana Reddy
29			All the areas as per Annexure-I

PULIVENDULA MUNICIPALITY			
ANNEXURE-I (See Rule-4)			
List of Old/ Existing Built-Up Areas/ Congested Areas/ Settlement/ Gram Khantam/ Abadi			
Sl.No.	**Ward No.**	**Block No.**	**Name of the Lociality / Area**
1	**2**	**3**	**4**
1	1		Parnapalli Bustand, Chinnanna romm street, Nadagowda school to Christian line, Chenna Reddy colony near Ester house, Chinna Anki Reddy house, Bangarupeta, New Church, Lakshmahal back side, P.Dastagiri house, Nagarigutta, S.C Colony, Dhobi Colony, Gopivihar Street, Lakshmahal back side, Parnapalli bustand, New Raja Reddy Colony, Rajiv Gandhi Colony
2	2		Pula Angallu Circle Start, Reddy vari street, Bayamma thota, near Geethanjili school, Jubli Road, Old Jr.Collage, Seionpuram 2nd bazaar, R&B Guest house end, Y.S.Jayamma Colony, Near Market yard, Chinna konda reddy colony endMarket yard start, Old Junior collage, Seionpuram 2nd bazar, P.Gurrappa House, Ahobilapuram, Gandhi Nagar, Near Fire Station, Ambati subbarayudu petrole bunk, Ambati subbarayudu petrole bunk, Mullavari street, Janadmanu Peerla chavidi, Alam Sab House (Ice Factory), Rathnmaiah setti house, Rotarypuram Mandal Primary School, Kachivaripalli
3	3		Pula Angallu Circle, Ammavarisala street, Mosque street, Old Y.S.Raja Reddy street, Sivalayam Street, Degree college road, RTC Bustand road, Bakarapuram, Jayaram setti street, Srinivasa rao street, Ammavarisala street, Ediga street, Islampuram, RTC Bustand road, Girls high school street, Guntha Bazar, Islampuram
4	4		Parnapalli bustand, Teacher Gangadhar Street, Telephone exhange old office, Rosi Reddy Street, Sri rama hall 2nd line, Maruthi theater, Bramhanapalli road, Swamy Vivekananda Street, RTC Subbatayudu House, State Bank 2nd colony, Yarragudipalli, Penthukothu church, C.S.I Church, Eliya Street, Rajyalakshmi theater, Rishi School, Teacher Gangadhar Street, State Bank 2nd colony End, Pushpagiri school (M.C Bali Reddy) Subhakar Reddy Colony, Girls collage road, RTC Bustand, Near Raghava Reddy house up, Near Girls Junior Collage, NGO Home, S.T Colony (Electrical Office Back side), Ring Road, Bypass road, Ganta Mastan street, Bylor Chenna Reddy street, Eliya Street, Telephone exchange office, Rosi Reddy Street, Sri rama hall 2nd line, Maruthi theater, Bramhanapalli road, Swamy Vivekananda Street
5	5		Bramhanapalli, Chinnarangapuram, Yarramreddy palli, Peddarangapuram, Ulimella, Boggudupalli, Polepalli, Velamavaripalli, Venkatapuram

ANNEXURE-II (See Rule-4)			
List of Areas Prohibited for High Rise Buildings			
Sl. No	**Ward No.**	**Block No.**	**Name of the Locality / Area**
1	**2**	**3**	**4**
1			All the areas as per Annexure-I

`

RAJAMPETA MUNICIPALITY			
ANNEXURE-I (See Rule-4)			
List of Old/ Existing Built-Up Areas/ Congested Areas/ Settlement/ Gram Khantam/ Abadi			
Sl.No.	**Ward No.**	**Block No.**	**Name of the Lociality / Area**
1	**2**	**3**	**4**
1	1	1/144 A-1 to upto 1st Ward	Market Street Harichandra Nagar Edigapalem
		1/1 to 1/30, 1/1 to 1/144R, 1/281 to 1/346.Q.4	By Pass Road
2	2	2/36 to 2/38-O, 2/101-A to 2/163B-6, 2/164 to 2/165	Chakralamadugu Ram Nagar Ram Nagar
		2/207 to 2/269, 2/330 to 2/424, 2/516 to 5/531	Mahaboob Nagar Mangal mitta Boyapalem
		2/708-B to 2/741-2 2nd Ward	Akula Street Tirupathi to Kadapa Road
3	3	3/230 to 3/231-O, 3/242A to 3/262A	Sar Street Kanakamma Street
4	4	4/64F to 4/70, 4/141-A to 4/141M	Usman Nagar Yerraballi
5	5	5/506A-B to 5/506D-B-1, 5/62 to 5/73	Kolimi Street Kolimi Street
		5/459 to 5/465-A, 5/92-A to 5/93-A	Eguvagadda Street NSR Theetre Back Side
6	6	6/927 to 6/987	Noonivaripalli Vidyut Nagar
7	7	7/1 to 7/405G	Balijapalli
8	8	8/47A to 8/48-I-8	Sai Nagar
9	9	9/A2 to 9/A12, 9/171 to 9/185	Mannur Lingala Street
		9/223A to 9/223C, 9/376 to 9/385	Lingala Street Yerraballi
		9/455 to 9/457	Yerraballi

ANNEXURE-II (See Rule-4)			
List of Areas Prohibited for High Rise Buildings			
Sl. No	**Ward No.**	**Block No.**	**Name of the Locality / Area**
1	**2**	**3**	**4**
1			All the areas as per Annexure-I

RAYACHOTI MUNICIPALITY

ANNEXURE-I
(See Rule-4)

List of Old/ Existing Built-Up Areas/ Congested Areas/ Settlement/ Gram Khantam/ Abadi

Sl.No.	Ward No.	Block No.	Name of the Lociality / Area
1	**2**	**3**	**4**
1	1 & 2	1 to 9	Masapeta & Kayalavandlapalli and existing
2	3 to 8	10 to 24	Mahaboob Nagar & Kothapalli
3	9 to 11	25 to 33	Alimabad Street & Mahaboob Basha Street
4	12 to 16	34 to 40	S.N.Colony
5	17 to 18	50 to 53	Kothapeta Ramapuram existing built
6	19 to 22	41 to49	Bose Nagar built
7	23 to 25	54 to 59	Bhattu Street built
8	26 to 27	60 to 63	Gandhi Bazaar & Trunk Road built
9	28	64 to 67	Nayab Sab Street & Budan Sab Street built
10	29 to 30	68 to 73	Patha Rayachoty & Brahmin Street built
11	31	74 to 85	Mittavandlapalli, Gollapalli, Muneappagaripalli, Abbavaram & Reddyvaripalli

ANNEXURE-II
(See Rule-4)

List of Areas Prohibited for High Rise Buildings

Sl. No	Ward No.	Block No.	Name of the Locality / Area
1	**2**	**3**	**4**
1			All the areas as per Annexure-I

ADILABAD MUNICIPALITY			
ANNEXURE – I (See Rule – 4)			
List of sites in Old / Existing built-up areas / Congested areas / Settlement / Grama Kantam / Abadi			
SL.No.	Ward No.	Block No.	Name of the Locality / Area
1	2	3	4
1	4	2	Kumarpet
2	3	4	Brahmanwada
3	3	3	Chota Talab (Chincharwada)
4	2	2	Kolipura
5	2	5	Tirpelly
6	2	5	Badh-ka-Mohalla
7	2	5	Kasab Galli

ANNEXURE – II (See Rule – 4)			
List of Areas Prohibited for High-Rise Buildings			
SL.No.	Ward No.	Block No.	Name of the Locality / Area
1	2	3	4
1	4	2	Kumarpet
2	3	4	Brahmanwada
3	3	3	Chota Talab (Chincharwada)
4	2	2	Kolipura
5	2	5	Tirpelly
6	2	5	Badh-ka-Mohalla
7	2	5	Kasab Galli

BELLAMPALLY MUNICIPALITY			
ANNEXURE – I (See Rule – 4)			
List of sites in Old / Existing built-up areas / Congested areas / Settlement / Grama Kantam / Abadi			
SL.No.	Ward No.	Block No.	Name of the Locality / Area
1	2	3	4
1	---	---	90% of the Municipality is covered by Singareni Collories Company Limited, Govt. and Railway Land, as such - Nil

ANNEXURE – II (See Rule – 4)			
List of Areas Prohibited for High-Rise Buildings			
SL.No.	Ward No.	Block No.	Name of the Locality / Area
1	2	3	4
1	---	---	90% of the Municipality is covered by Singareni Collories Company Limited, Govt. and Railway land, as such - Nil

BHAINSA MUNICIPALITY			
ANNEXURE – I (See Rule – 4)			
List of sites in Old / Existing built-up areas / Congested areas / Settlement / Grama Kantam / Abadi			
SL.No.	Ward No.	Block No.	Name of the Locality / Area
1	2	3	4
1	1	1-1,1-2,1-3, 1-4,1-5	Batty Gally, Panjesha Gally, Korba Gally, Boi Gally, Dhobi Gally, Zulfakar Gally, Ambedkar Nagar, Main Road, Sanjay Gandhi Market, Padmavathi Colony, Jewelry Market
2	2	2-1,2-2,2-3, 2-4,2-5	Ganesh Nagar, Hajam Gally, Brahman Gally, Marvadi Gally, Himmath Ram Malla, Kumar Gally, New Colony / Chinay talkies, Old Bazar, Gowli Pura, Quazi Gally, Shakeel Gally
3	3	3-1,3-2,3-3 3-4,3-5	Bangala Gally, Barimam Gally, Kisan Gally, Pandri Gally, Sidhartha Nagar, Old Bazar, Bhail Bazar area Kunta area, Naya Badi, Madina Colony, Asad Baba Nagar
4	4	4-1,4-2,4-3	Chowdary Gally, Market Gally, Zainulabuddin Gally, Gunj Area, Narsimha Nagar, Rajiv Nagar, Pule Nagar, Ram Gopal Area, Owaisi Nagar, Subhash Nagar, Shastri Nagar, New Pipri, Gopal Nagar

ANNEXURE – II (See Rule – 4)			
List of Areas Prohibited for High-Rise Buildings			
SL.No.	Ward No.	Block No.	Name of the Locality / Area
1	2	3	4
1	2	2-1	Hajam Gally
2	2	2-2	Brahman Gally, Marvadi Gally

KAGAZNAGAR MUNICIPALITY			
ANNEXURE – I **(See Rule – 4)**			
List of sites in Old / Existing built-up areas / Congested areas / Settlement / Grama Kantam / Abadi			
SL.No.	**Ward No.**	**Block No.**	**Name of the Locality / Area**
1	**2**	**3**	**4**
1	1-1-1 to 1-1-310	---	Rajiv Chowk
2	1-2-1- to 1-2-388 1-3-1 to 1-3-32	---	Railway gate area, Old Municipal Office area
3	1-3-138 to 1-3-238/A	---	Indira Market & Santhosh Function Hall area
4	1-3-240 to 1-3-303	---	Kanyakaparameshwari Temple Area, Subhash Road area
5	1-4-1 to 1-4-10	---	Ambedkar Chowk area
6	1-4-11 to 1-4-70	---	Patel Road & Indira Market area
7	1-4-71 to 1-4-143	---	Patel road & Bhagathsing Road
8	1-4-144 to 1-4-167	---	Subhash Road

ANNEXURE – II **(See Rule – 4)**
List of Areas Prohibited for High-Rise Buildings
All area mentioned in category – I (Excepts plots abutting 18 m and above roads)

MANCHERIAL MUNICIPALITY

ANNEXURE – I
(See Rule – 4)

List of sites in Old / Existing built-up areas / Congested areas / Settlement / Grama Kantam / Abadi

SL.No.	Ward No.	Block No.	Name of the Locality / Area
1	2	3	4
1	1	1	Maruthi Nagar
2	2	3	ACC Area
3	3	1	Savithri Nagar
4	7	28	Gopal Wada
5	11	25	Ashok Road
6	15	19	N.T.R.Colony Road
7	16	20	College Road
8	18	20	Yedla Road
9	19	9	Gosevamandal
10	28	18	Padmashali Colony
11	26	18	Vyshya Bhavan Area
12	26	15,16,17	Old Mancherial
13	32	12	Gouthami Nagar

ANNEXURE – II
(See Rule – 4)

List of Areas Prohibited for High-Rise Buildings

SL.No.	Ward No.	Block No.	Name of the Locality / Area
1	2	3	4
1	3	3	A.C.C.Locality
2	1	1	Rallavagu
3	26 & 27	15,16&17	Old Mancherial
4	20 & 21	5,6,7,10&11	Indira Nagar Ganga Reddy Road R.P.Road

MANDAMARRI NAGARAPANCHAYAT			
ANNEXURE – I (See Rule – 4)			
List of sites in Old / Existing built-up areas / Congested areas / Settlement / Grama Kantam / Abadi			
SL.No.	Ward No.	Block No.	Name of the Locality / Area
1	2	3	4
1	---	---	Due to the total Mandamarri Municipality area covered under 1/70 Act and tribal agency area. Most of the area belonging to the SCC Ltd area. And also the population is also decreased. Asper 2001 census the population is 67000 and 2011 census population is 52000. When coal mines are closed the employees of SCC Ltd are shifted to other places. Hence the above reasons the congested areas are not proposed.

ANNEXURE – II (See Rule – 4)			
List of Areas Prohibited for High-Rise Buildings			
SL.No.	Ward No.	Block No.	Name of the Locality / Area
1	2	3	4
1	---	---	Due to the total Mandamarri Municipality area covered under 1/70 Act and tribal agency area. Most of the area belonging to the SCC Ltd area. And also the population is also decreased. Asper 2001 census the population is 67000 and 2011 census population is 52000. When coal mines are closed the employees of SCC Ltd are shifted to other places. Hence the above reasons the Area Prohibited for High Rise Buildings are not proposed.

NIRMAL MUNICIPALITY

ANNEXURE – I
(See Rule – 4)

List of sites in Old / Existing built-up areas / Congested areas / Settlement / Grama Kantam / Abadi

SL.No.	Ward No.	Block No.	Name of the Locality / Area
1	2	3	4
1	6	3	Bangalpet (Notified slum)
2	2	4 & 5	Kabutarkaman, Hanmanji Gutta (Notified slum)
3	4	2	Bestawarpet (Notified slum)
4	9,15	2	Brahmapuri
5	4	4	Kalwagadda
6	10,12,11	5	Budhawarpet (Notified slum)
7	16	2	Islampura
8	17	6	Market area
9	19,33	5	Old bus stand area
10	20,17	6	Kamal talkies road
11	20	6	Kapuwad Dyagawad (Notified slum)
12	21	6	Chikkadpally, Sweeper Colony
13	23,24	6 & 7	Bagulawada (Notified slum)
14	24, 22	6	Motinagar Shishumandir
15	33, 22	6	Panjeshagally, Pangapally (Notified slum)
16	26	7	Gollapet Kapuwada (Notified slum)
17	28	1	Siddapur (V) (Notified slum)
18	33, 32	1	Madina Colony, Sarad Mahal (part) (Notified slum)
19	33	7	Zohranagar, Kalanagar (Notified slum)
20	35, 36	5	Gajulpet ((Notified slum)
21	28, 31	1	Eidgaon (Notified slum)
22	11	5	Viveknagar
23	34	5	Old Priyadarshininagar (Power house area)

ANNEXURE – II
(See Rule – 4)

List of Areas Prohibited for High-Rise Buildings

SL.No.	Ward No.	Block No.	Name of the Locality / Area
1	2	3	4
1	6	3	Bangalpet (Except 40’-0” wide road)
2	2	4 & 5	Kabutarkaman, Hanmanji Gutta
3	4	2	Bestawarpet
4	9,15	2	Brahmapuri (Except 40’-0” wide road)
5	4	4	Kalwagadda (Except 40’-0” wide road)
6	10,12,11	5	Budhawarpet (Except 50’-0” wide road)
7	16	2	Islampura (Except 40’-0” wide road)
8	17	6	Market area (Except 40’-0” wide road)
9	19,33	5	Old bus stand (Except 50’-0” wide road)
10	20,17	6	Kamal talkies road area (Except 40’-0” wide road)
11	20	6	Kapuwad Dyagawad (Except 40’-0” wide road)
12	21	6	Chikkadpally, Sweeper Colony (Except 80’-0” wide road)
13	23,24	6 & 7	Bagulawada (Except 40’-0” wide road)
14	24, 22	6	Shishumandir (Except 40’-0” wide road)
15	33, 22	6	Panjeshagally, Pangapally (Except 40’-0” wide road)
16	26	7	Gollapet Kapuwada (Except 40’-0” wide road
17	28	1	Siddapur (V) (Except 60’-0” wide road)
18	33, 32	1	Madina Colony, Sarad Mahal (part) (Except 60’-0” wide road)
19	33	7	Zohranagar, Kalanagar (Except 40’-0” wide road)
20	35, 36	5	Gajulpet (Except 60’-0”& 40’-0” wide road)
21	28, 31	1	Eidgaon (Except 150’-0” wide road)
22	11	5	Viveknagar (Except 150’-0” wide road)
23	34	5	Old Priyadarshininagar (Power house area) (Except 40’-0” wide road)

HUSNABAD NAGARAPANCHAYAT			
ANNEXURE – I (See Rule – 4)			
List of sites in Old / Existing built-up areas / Congested areas / Settlement / Grama Kantam / Abadi			
SL.No.	Ward No.	Block No.	Name of the Locality / Area
1	2	3	4
1	1	1-1 to till end	Jyothinagar, Nagara Panchayat Office Back side
2	2	2-1 to till end	Ambedkarnagar, Boddu Raouthu
3	4	4-1 to till end	Arepally Part, Chinthal Colony Part
4	5	5-1 to till end	Arepally Part
5	6	6-1 to till end	Arepally Part, Budigajangala Colony, Sanjeevaiah Colony
6	7	7-1 to till end	Shivayalam Street, Ganesh Nagar
7	13	13-1 to till end	Pragathinagar
8	14	14-1 to 14-64	Reddy Colony
9	15	15-1 to till end	Pochamma Wada Krishna Talkies Road
10	16	16-1 to till end	Godam Gadda
11	18	18-1 to till end	Maryala Wada, Vidyanagar
12	20	20-1 to till end	Subashnagar
13	21&22	21-46 to 22-63	K.B.Colony

ANNEXURE – II (See Rule – 4)			
List of Areas Prohibited for High-Rise Buildings			
SL.No.	Ward No.	Block No.	Name of the Locality / Area
1	2	3	4
1	1	1-1 to till end	Jyothinagar, Nagara Panchayat Office Back side
2	2	2-1 to till end	Ambedkarnagar, Boddu Raouthu
3	4	4-1 to till end	Arepally Part, Chinthal Colony Part
4	5	5-1 to till end	Arepally Part
5	6	6-1 to till end	Arepally Part, Budigajangala Colony, Sanjeevaiah Colony
6	7	7-1 to till end	Shivayalam Street, Ganesh Nagar
7	13	13-1 to till end	Pragathinagar
8	14	14-1 to 14-64	Reddy Colony
9	15	15-1 to till end	Pochamma Wada Krishna Talkies Road
10	16	16-1 to till end	Godam Gadda
11	18	18-1 to till end	Maryala Wada, Vidyanagar
12	20	20-1 to till end	Subashnagar
13	21&22	21-46 to 22-63	K.B.Colony

HUZURABAD NAGARAPANCHAYAT			
ANNEXURE – I **(See Rule – 4)**			
List of sites in Old / Existing built-up areas / Congested areas / Settlement / Grama Kantam / Abadi			
SL.No.	**Ward No.**	**Block No.**	**Name of the Locality / Area**
1	**2**	**3**	**4**
1	1	Pochamma Wada	Old, existing built up area, congested areas, settlement, Grama Kantam, Abadi
2	2	Tenugu Wada	- do -
3	3	Prathapa Wada	- do -
4	4	Bhusarapu Wada	- do -
5	5	Kummari Wada	- do -
6	6	Chakali Wada	- do -
7	7	Indhira Marg	- do -
8	8	Maruthi Nagar	- do -
9	9	Banda Ankoos Wada	- do -
10	17	Mamindla Wada	- do -
11	18	4th Class Employees Colony	- do -
12	21	Gandhi Nagar	- do -

ANNEXURE – II **(See Rule – 4)**			
List of Areas Prohibited for High-Rise Buildings			
SL.No.	**Ward No.**	**Block No.**	**Name of the Locality / Area**
1	**2**	**3**	**4**
1	1	Pochamma Wada	Abutting 40'-0" wide road and above Master Plan roads are allowed for construction of High-rise buildings
2	2	Tenugu Wada	- do -
3	3	Prathapa Wada	- do -
4	4	Bhusarapu Wada	- do -
5	5	Kummari Wada	- do -
6	6	Chakali Wada	- do -
7	7	Indhira Marg	- do -
8	8	Maruthi Nagar	- do -
9	9	Banda Ankoos Wada	- do -
10	17	Mamindla Wada	- do -
11	18	4th Class Employees Colony	- do -
12	21	Gandhi Nagar	- do -

JAGITYAL MUNICIPALITY			
ANNEXURE – I (See Rule – 4)			
List of sites in Old / Existing built-up areas / Congested areas / Settlement / Grama Kantam / Abadi			
SL.No	**Ward No.**	**Block No.**	**Name of the Locality / Area**
1	**2**	**3**	**4**
1	1	6-2/P,7-2/P,7-3/P,	Old Pochammawada
2	5	6-2/P,6-3, 6-4/P, 7-2/P,7-3/P	Pochammawada, Naidu Hospital Road
3	7	6-3/P, 6-4/P, 6-5/P, 7-1/P	Pochammawada, Brahman Street (Old Bus stand) and Santhosh Nagar
4	8	6-3/P, 6-5/P, 6-6, 7-1/P	Brahman Street and Padma Nagar
5	9	1-1/P, 7-6/P, 7-7/P	Mahalaxmi Nagar and Chilukawada
6	10	1-1/P	Chiluwa Wada
7	11	1-1/P, 1-2/P	Anagadi Bazar and Kuntakatta
8	12	2-1/P, 2-2/P, 2-3/P	Vegetable Market road area
9	13	1-6P, 2-1/P, 2-2/P, 2-3/P, 2-4/P	Tower Circle Sriram Nagar
10	21	2-4/P, 2-5/P, 2-6/P, 3-2/P	Mothemala wada and Puranipeta
11	22	2-5/P, 2-6/P, 3-1/P, 3-2/P	Gajula Pochamma area, Sidhartha School
12	23	3-1/P, 3-3/P, 3-4/P	Puranipeta Masjid
13	24	3-3/P, 3-4/P, 3-5/P	Tenuguwada and Ganesh Nagar
14	25	3-2/P, 3-3/P, 3-4/P, 3-5/P	Puranipet, Dobi Wada
15	30	4-5/P, 4-6/P	Daggulamma Temple Area
16	31	4-6/P, 5-1/P	Tenuguwada
17	32	4-6/P, 5-1/P	Osmanpura, Quilagadda, Tenuguwada
18	34	5-3/P, 5-4/P, 5-5/P	Hazari Mahella, Osmanpura, Katikawada
19	35	5-4/P, 5-5/P, 6-3/P	Pochammawada
20	36	5-2/P, 5-5/P, 5-6/P	Quilagadda, Jandamahella
21	37	5-2/P, 5-6/P, 6-1/P	Quilagadda, Jandamabella, Sutharipeta, Kothawada
22	38	6-1/P, 6-2/P	Kothawada, Kalachi Harizana Wada and Beeraiah Temple area

ANNEXURE – II (See Rule – 4)			
List of Areas Prohibited for High-Rise Buildings			
SL.No.	**Ward No.**	**Block No.**	**Name of the Locality / Area**
1	**2**	**3**	**4**
---	---	---	---

JAMMIKUNTA NAGARAPANCHAYAT			
ANNEXURE – I **(See Rule – 4)**			
List of sites in Old / Existing built-up areas / Congested areas / Settlement / Grama Kantam / Abadi			
SL.No.	**Ward No.**	**Block No.**	**Name of the Locality / Area**
1	**2**	**3**	**4**
1	10/P	10-1-1 to 10-1-100 10-2-1 to 10-2-100 10-3-1 to 10-3-86	Jammikunta Road, Abadi S.C.Colony
	11/P	11-1-1 to 11-1-145	
	12/P	12-1-1 to 12-1-114	
	13/P	13-1-1 to 13-1-119	
	14/P	14-1-1 to 14-1-103	
2	15/P	15-1-1 to 15-1-138 15-2-1 to 15-2-65/21	Keshavapuram , S.C. Colony
3	16/P	16-1-1 to 16-1-180	Hanumandlapalle
4	16/P	16-2-1 to 16-2-100 16-3-1 to 16-3-78	Mothkulagudem, S.C.Colony
	17/P	17-1-1 to 17-1-100 17-2-1 to 17-2-43	
	18/P	18-1-1 to 18-1-89/7	

ANNEXURE – II **(See Rule – 4)**			
List of Areas Prohibited for High-Rise Buildings			
SL.No.	**Ward No.**	**Block No.**	**Name of the Locality / Area**
1	**2**	**3**	**4**
All area mentioned in Annexure – I (Excepts plots abutting 18 m. and above roads)			

KARIMNAGAR MUNICIPAL CORPORATION			
ANNEXURE – I (See Rule – 4)			
List of sites in Old / Existing built-up areas / Congested areas / Settlement / Grama Kantam / Abadi			
SL.No.	Ward No.	Block No.	Name of the Locality / Area
1	2	3	4
1	1	1,2,3,4,5&6	Shashab Mahalla (Part), Medariwada (Part), Old Bazar (Part), Padmashali street (Part) & Shastri road (Part)
2	2	1,2,3,4,5,6,7	Brahmanwada (Part), Prakasham Gunj (Part), Boiwada (Part), Kaman road (Part), Dhobiwada (Part), Sikhwadi (Part), Market road (Part), Dommariwada (Part), Mukarampura (Part),
3	3	2,3,4&5	Sawaran street (Part), Doctor street (Part), Sainagar (Part), Azmathpura (Part) and Valmikinagar (Part)
4	4	1,2,3,4,5&6	Madeena complex (Part), Rajeev chowk (Part), Jafri road (Part), Tilak road (Part), Dwarakanagar (Part), Anandnagar (Part), Weekly market (Part) and Rajivnagar (Part)
5	5	1,2,3,4,5,6	Fathepura (Part), Ahmedpura (Part), Mangaliwada (Part) and Kapuwada (Part)
6	6	1,2,3,4,5,6	Ashoknagar (Part), Hussainipura (Part), Mothazkhana (Part), Durgammagadda (Part), Karkhanagadda (Part), Sahethnagar (Part), Sharmanagar (Part) and Ambedkarnagar (Part)
7	7	2	Mankammathota (Part)
8	8	4	Ganesh Nagar (Part)
9	10	5&6	Kisan Nagar (Part)

ANNEXURE – II (See Rule – 4)			
List of Areas Prohibited for High-Rise Buildings			
SL.No.	Ward No.	Block No.	Name of the Locality / Area
1	2	3	4
1	1	1,2,3,4,5&6	Shashab Mahalla (Part), Medariwada (Part), Old Bazar (Part), Padmashali street (Part) & Shastri road (Part)
2	2	1,2,3,4,5,6,7	Brahmanwada (Part), Prakasham Gunj (Part), Boiwada (Part), Kaman road (Part), Dhobiwada (Part), Sikhwadi (Part), Market road (Part), Dommariwada (Part), Mukarampura (Part),
3	3	2,3,4&5	Sawaran street (Part), Doctor street (Part), Sainagar (Part), Azmathpura (Part) and Valmikinagar (Part)
4	4	1,2,3,4,5&6	Madeena complex (Part), Rajeev chowk (Part), Jafri road (Part), Tilak road (Part), Dwarakanagar (Part), Anandnagar (Part), Weekly market (Part) and Rajivnagar (Part)
5	5	1,2,3,4,5,6	Fathepura (Part), Ahmedpura (Part), Mangaliwada (Part) and Kapuwada (Part)
6	6	1,2,3,4,5,6	Ashoknagar (Part), Hussainipura (Part), Mothazkhana (Part), Durgammagadda (Part), Karkhanagadda (Part), Sahethnagar (Part), Sharmanagar (Part) and Ambedkarnagar (Part)
7	7	2	Mankammathota (Part)
8	8	4	Ganesh Nagar (Part)
9	10	5&6	Kisan Nagar (Part)

KORUTLA MUNICIPALITY

ANNEXURE – I
(See Rule – 4)

List of sites in Old / Existing built-up areas / Congested areas / Settlement / Grama Kantam / Abadi

SL. No.	Ward No.	Block No. & House No.		Name of the Locality / Area
		From	To	
1	2	3	4	5
1	1	1-3-160, 1-4-1	1-3-425, 1-4-45	Adarsha nagar layout fee Erukalawad, Ailpur road upto Suryodaya School Road left side
2	2	1-3-1	1-3-118/2	Ailapur road, Prakasham road upto Katkam Sangaiah function place
3	3	1-2-111,1-2-197	1-2-177,1-2-410	Prakasham Road & Jhanshi road
4	4	1-1-1071,1-2-178	1-1-1362,1-2-196	Jhansi Road upto Junction
5	5	1-1-638,1-1-1363	1-1-849,1-1-1383	Kallur road upto Junction
6	6	1-1-586,1-1-850	1-1-637,1-1-904	Bheemunidubba Part
7	7	1-1-261, 1-1-468, 1-1-554	1-1-401, 1-1-524, 1-1-585	Bheemunidubba & Rahamathpura Part
8	8	1-1-151,1-1-22	1-1-260,1-1-103	Hajipura part
9	9	5-2-470,5-3-1	5-2-535,5-3-220	Sairampura Colony & Sanjeeva Nagar
10	10	5-3-221,5-4-1, 6-4-202	5-3-388, 5-4-111, 6-4-227	Shanthi Road & Ambedkar Nagar
11	11	5-2-168	5-2-469	Raheempura
12	12	5-1-286,5-2-1	5-1-400,5-2-167	Rathalapump & Teachers Club Road
13	13	3-1-1,5-1-59	3-1-200,5-1-285	Indira Road & Patel Road
14	14	6-1-1,6-2-1, 6-3-123	6-1-150, 6-2-200, 6-3-194	Bendapally, Kalwagadda
15	15	6-3-58, 6-4-1, 6-4-228	6-3-122,6-4-201, 6-4-240	Gangampet
16	16	4-3-52, 6-3-1	4-3-282, 6-3-57	Jawahar road, Khagajipura & Ravindra road
17	17	4-4-1,4-5-1,4-6-1	4-4-161, 4-5-108, 4-6-131	Ravindra Road & Jawahar Road
18	18	3-2-1, 3-3-1,3-4-1	3-2-140,3-3-120, 3-4-165	Patel road & Jawahar Road
19	19	2-6-1,2-6-86, 5-1-1	2-6-26,2-6-320 5-1-58	Srinivas Road, Vinobha Road, Santhoshimata Veedi & Indira road
20	20	2-3-108,2-4-1, 2-5-1, 2-6-27	2-3-177,2-4-140, 2-5-150, 2-6-85	Gandhi road, Ganeshwada & Vinobha road
21	21	2-1-1,2-2-1, 2-3-1, 2-3-93	2-1-169,2-2-162, 2-3-92,2-3-107	Thilak road, Gandhi road, Vivekananda road & Go-down area
22	22	3-5-1,3-6-1, 2-1-170	3-5-145,3-6-135, 2-1-210	Kamunipenta & Gandhi Road
23	23	4-2-60, 4-3-1	4-2-290, 4-3-51	Hyderguda, Ravindra road
24	24	4-1-471, 4-1-897	4-1-549, 4-1-1098	Balaji Road & I.B.back side area

ANNEXURE – II
(See Rule – 4)

List of Areas Prohibited for High-Rise Buildings

SL.No.	Ward No.	Block No.	Name of the Locality / Area	Remarks
1	2	3	4	5
1	---	---	---	No areas prohibited for High-rise buildings

METPALLY MUNICIPALITY

ANNEXURE – I
(See Rule – 4)

List of sites in Old / Existing built-up areas / Congested areas / Settlement / Grama Kantam / Abadi

SL. No.	Ward No.	Block No. & House No.		Name of the Locality / Area
		From	To	
1	2	3		4
1	1	1-4-543/10	1-4-543/47, 1-10-299/71	Court back side, Dubbawada, SRSP Camp, Regunta
2	3	2-2-54, 2-2-201, 3-1-73, 3-3-46	2-2-136, 2-217, 3-1-148, 3-3-47/1	Dubbawada, Market area, Boyawada
3	4	4-1-50, 4-3-29, 4-3-99	4-1-97, 4-3-67, 4-3-136	Shivaji Nagar, Matam area
4	5	3-1-149, 4-1-1	3-1-253, 4-1-16	Market area, Old Boyawada, Boyawada
5	6	4-1-17, 4-1-98, 4-2-1, 4-3-1 4-3-68, 4-3-170	4-1-49, 4-1-152, 4-2-137,4-3-28, 4-3-98, 4-3-170	Boyawada, Shivaji Nagar, Chawidi, Gajulpet
6	7	4-3-137, 5-1-1, 5-4-1	4-3-169, 5-1-173 5-4-75	Gajulpet, Singapur
7	8	5-2-1, 5-3-1	5-2-199, 5-3-144/A	Gajulpet, Indira Nagar
8	10	1-1-1, 1-2-1	1-1-177,1-2-139	Brahmanwada, Bukawada
9	11	1-2-140	1-2-242	Market Majid, Pochammawada, Chaitanya Nagar
10	19	1-4-456/A	1-4-543/47	Kalanagar 1,2,3,4 Street
11	21	3-1-1	3-1-72	Gole Hanuman Area, Grandalayam Road area
12	23	2-2-137	2-2-200	Bombay Building area, Dubbawada

ANNEXURE – II
(See Rule – 4)

List of Areas Prohibited for High-Rise Buildings

SL.No.	Ward No.	Block No.	Name of the Locality / Area	Remarks
1	2	3	4	5
---	---	---	---	No areas prohibited for High-rise buildings

PEDDAPALLY NAGARAPANCHAYAT			
ANNEXURE – I **(See Rule – 4)**			
List of sites in Old / Existing built-up areas / Congested areas / Settlement / Grama Kantam / Abadi			
SL.No.	**Ward No.**	**Block No.**	**Name of the Locality / Area**
1	**2**	**3**	**4**
1	2	1	Opp: Busstand, Konthamwada, Pragathinagar, Old court, Ambedkarcolony, Adarshanagar
2	2	5,6	Nallapochammwada, Chandapalli road area, Dharmaram road area
3	3	1,7	Thilaknagar, Paida Bazar, Jyothinagar, Chitteti wada, Lalchinthachowk, Seetharama Temple area, Shankergunj, Koti, Sagarroad, Kanchara Bavi area
4	4	1,2	Bandiwada, Balajinagar, Vidyanagar, Chinna Masjid area
5	4	3	Mudami street
6	4	4,5	Subhashnagar, Kaman Area
7	4	6,7	Indiranagar, Mogalpura
8	4	8	Muthyalapochammawada, Janda Area, Main road

ANNEXURE – II **(See Rule – 4)**			
List of Areas Prohibited for High-Rise Buildings			
SL.No.	**Ward No.**	**Block No.**	**Name of the Locality / Area**
1	**2**	**3**	**4**
1	2	1	Opp: Busstand, Konthamwada, Pragathinagar, Old court, Ambedkarcolony, Adarshanagar
2	2	5,6	Nallapochammwada, Chandapalli road area, Dharmaram road area
3	3	1,7	Thilaknagar, Paida Bazar, Jyothinagar, Chitteti wada, Lalchinthachowk, Seetharama Temple area, Shankergunj, Koti, Sagarroad, Kanchara Bavi area
4	4	1,2	Bandiwada, Balajinagar, Vidyanagar, Chinna Masjid area
5	4	3	Mudami street
6	4	4,5	Subhashnagar, Kaman Area
7	4	6,7	Indiranagar, Mogalpura
8	4	8	Muthyalapochamma wada, Janda Area, Main road

RAMAGUNDAM MUNICIPAL CORPORATION

ANNEXURE – I
(See Rule – 4)

List of sites in Old / Existing built-up areas / Congested areas / Settlement / Grama Kantam / Abadi

SL.No.	Ward No.	Block No.	Name of the Locality / Area
1	2	3	4
1	1	---	Malyalapalli (V) Grama Kantam
2	1	---	Ramagundam (V), Grama Kantam
3	8	---	Janagama (V) Grama Kantam
4	12	---	Rammandir Area, Grama Kantam, Godavarikhani
5	15	---	Old Municipal area
6	16	---	Addaguntapalli
7	15	---	Laxminagar, Old Congested area
8	16	---	Kalyan Nagar
9	16	---	Swatantra Chowk
10	17	---	Maderbasti
11	14	---	Ganesh Nagar
12	2	---	Rahmat Nagar, Slum area
13	1	---	Bharat Nagar, Slum area
14	33	---	KCR Colony and Pragathi Nagar Colony
15	32	---	Elkalapalli Gate
16	32	---	Sanjaynagar Slum Area
17	1	---	ST Colony, Ramagundam
18	28	---	New Maredupaka, SC Colony

ANNEXURE – II
(See Rule – 4)

List of Areas Prohibited for High-Rise Buildings

SL.No.	Ward No.	Block No.	Name of the Locality / Area
1	2	3	4
1	9 to 26	---	Coal Belt Area (SCCL) abutting to Godavari River
2	32/P	---	FCI, Township
3	34	---	NTPC, Township

SIRICILLA MUNICIPALITY			
ANNEXURE – I **(See Rule – 4)**			
List of sites in Old / Existing built-up areas / Congested areas / Settlement / Grama Kantam / Abadi			
SL.No.	**Ward No.**	**Block No.**	**Name of the Locality / Area**
1	**2**	**3**	**4**
I. OLD AREAS			
1	2	2-1,2-2,2-4,2-6,2-7	Sanjeevaiah Nagar, Kummariwada, Anantha Nagar & Ashok Nagar
2	4,1	4-5,4-6	Ambedkar Nagar
3	3	3-4,3-5,3-6,3-7 & 3-8	Shanthi Nagar
4	4	4-2, 4-3	Dhobhigalli
5	9,10	9-6, 10-1	Thukkaraopalli
6	10,11,12	10-3,10-5,10-6,10-7, 10-8,11-1,11-2,11-3, 11-4,11-8,12-3, 12-4,12-11	B.Y.Nagar, Indira Nagar
7	1	1-2,1-5,1-6,1-7, 1-8	Padma Nagar, Ambika Nagar
8	1, 12	1-3,1-4,1-8,12-9	Venkampet Mysaram Temple, Pragathi Nagar & Sardar Nagar
9	5	5-1	Venkateshwara Temple Street
10	10	10-1, 10-2	Sai Nagar
11	2	2-1, 2-2	Ashok Nagar
12	9	9-6	Balyal Nagar
13	9	9-7, 9-8	Tharakaramana Nagar
14	11, 12	11-4,11-5,11-6, 11-7,12-11	P.S.Nagar
15	12	12-6,12-7	Sardar Nagar
16	8,9	8-4,9-3,9-4	Nehru Nagar
II. EXISTING BUILT UP AREAS			
17	2,3	2-7,2-8,3-1,3-2	Old Petrol Bunk to New Petrol Bunk
18	6	6-2	Bhavanarushi Nagar
19	6	6-4,6-5,6-6	Geetha Nagar, Vidya Nagar
20	7,8,12	7-8,8-1,8-3,12-5	Gandhi Nagar & Gopal Nagar
21	9	9-5	Venkat Rao Nagar
22	8	8-5	Nehru Nagar
23	6,7	6-8,7-1,7-2,7-3,7-4	Subhash Nagar
III. CONGESTED AREAS / OLD ABADI AREAS / GRAMA KANTAM			
24	5	5-8	Venkateshwara Temple Street
25	5	5-2,5-3	Vimal Theatre Area
26	5	5-3,5-4	Siddulwada, Kummarigalli
27	3,4,5	3-2,3-3,4-2,4-3,5-1	Dobhigalli, Shashtri Nagar, Vishwabrahmanaveedhi
28	4	4-7,4-8	Pochamma Street, Boiwada
29	12	12-7,12-8,12-7,12-9, 12-10	Venkampet, Pragathi Nagar
30	2	2-6	Sanjeevaiah Nagar
31	4	4-4	Reddywada

ANNEXURE – II **(See Rule – 4)**			
List of Areas Prohibited for High-Rise Buildings			
SL.No.	**Ward No. (Revenue)**	**Block No.**	**Name of the Locality / Area**
1	**2**	**3**	**4**
1	5	5-8	Venkateshwara Temple Street
2	5	5-2,5-3	Vimal Theatre Area
3	5	5-3,5-4	Siddulwada, Kummarigalli
4	3,4,5	3-2,3-3,4-2,4-3,5-1	Dobhigalli, Shashtri Nagar, Vishwabrahmanaveedhi
5	4	4-7,4-8	Pochamma Street, Boiwada
6	12	12-7,12-8,12-7,	Venkampet, Pragathi Nagar

		12-9, 12-10	
7	2	2-6	Sanjeevaiah Nagar
8	4	4-4	Reddywada

VEMULAWADA NAGARAPANCHAYATH			
ANNEXURE – I **(See Rule – 4)**			
List of sites in Old / Existing built-up areas / Congested areas / Settlement / Grama Kantam / Abadi			
SL.No.	**Ward No.**	**Block No.**	**Name of the Locality / Area**
1	**2**	**3**	**4**
1	1	1-5,1-6,1-7,1-8	Sanjeevaiah Nagar, Shivanagar, Vasavi Sastram back side area, Kummari Veedhi, Rammandir Street.
2	2	2-1,2-2,2-3,2-4,2-5	Main road, Mochiwada, Kummariwada, Harijana Wada, Mudiraj Street
3	3	3-1,3-2	Mudiraj Street, Uppugadda part
4	4	4-1,4-2	Vishwabhrahmana Veedi, Uppugadda Street part, Vegetable Market area part
5	5	5-1, 5-2	Dhobhi Galli, Subash Nagar
6	6,7,8	6-1,6-2,6-5,6-6, 7-1,7-2,8-2	S.C.Colony, Chiluka Wada, Vadla Kammari Wada, Andhra Bank Opp., Vegetable Market area part, Baddi Pochamma Street, Nagareshwara Swamy Temple back side area, Perukaveedhi, Anjani Nagar.

ANNEXURE – II **(See Rule – 4)**			
List of Areas Prohibited for High-Rise Buildings			
SL.No.	**Ward No.**	**Block No.**	**Name of the Locality / Area**
1	**2**	**3**	**4**
1	1	1-5,1-6,1-7,1-8	Sanjeevaiah Nagar, Shivanagar, Vasavi Sastram back side area, Kummari Veedhi, Rammandir Street.
2	2	2-1,2-2,2-3,2-4,2-5	Main road, Mochiwada, Kummariwada, Harijana Wada, Mudiraj Street
3	3	3-1,3-2	Mudiraj Street, Uppugadda part
4	4	4-1,4-2	Vishwabhrahmana Veedi, Uppugadda Street part, Vegetable Market area part
5	5	5-1, 5-2	Dhobhi Galli, Subash Nagar
6	6,7,8	6-1,6-2,6-5,6-6, 7-1,7-2,8-2	S.C.Colony, Chiluka Wada, Vadla Kammari Wada, Andhra Bank Opp., Vegetable Market area part, Baddi Pochamma Street, Nagareshwara Swamy Temple back side area, Perukaveedhi, Anjani Nagar.

KHAMMAM MUNICIPALITY			
ANNEXURE – I (See Rule – 4)			
List of sites in Old / Existing built-up areas / Congested areas / Settlement / Grama Kantam / Abadi			
SL.No.	Ward No.	Block No.	Name of the Locality / Area
1	2	3	4
1	2	5	Buradaraghavapuram
2	2	1	Potti Sree Ramulu Road
3	2	2	Raghava Theatre Road
4	2	1	Gandhi Chowk Area
5	2	3	Harkar well center
6	3	4	Gandhi Nagar
7	9	5,6,7,10 & 11	Kasba Bazar
8	9	1,6,7	Kaman Bazar
9	9	2	Bommana Center
10	9	4	Aziz Street
11	8	8	Riccob Bazar
12	8	6	Mominan Mohalla

ANNEXURE – II (See Rule – 4)			
List of Areas Prohibited for High-Rise Buildings			
SL.No.	Ward No.	Block No.	Name of the Locality / Area
1	2	3	4
1	2	5	Buradaraghavapuram
2	2	1	Potti Sree Ramulu Road (Except sites abutting to 60’-0” and above wide road)
3	2	2	Raghava Theatre Road (Except sites abutting to 60’-0” and above wide road)
4	2	1	Gandhi Chowk Area (Except sites abutting to 60’-0” and above wide road)
5	2	3	Harkar well center
6	3	4	Gandhi Nagar
7	9	5,6,7,10&11	Kasba Bazar (Except sites abutting to 60’-0” and above wide road)
8	9	1,6,7	Kaman Bazar
9	9	2	Bommana Center
10	9	4	Aziz Street
11	8	8	Riccob Bazar
12	8	6	Mominan Mohalla

KOTHAGUDEM MUNICIPALITY			
ANNEXURE – I **(See Rule – 4)**			
List of sites in Old / Existing built-up areas / Congested areas / Settlement / Grama Kantam / Abadi			
SL.No.	**Ward No.**	**Block No.**	**Name of the Locality / Area**
1	**2**	**3**	**4**
1	1	1 & 2	Old Kothagudem
2	6	7 & 8	Netaji Market, Ganesh Basthi
3	7	2 & 3	Medara Basthi
4	10	3 & 4	Nehru Basthi, Durjan Basthi
5	12	1 & 2	Burma Camp
6	17	1 & 2	Ramavaram 7 – No. Bazar

ANNEXURE – II **(See Rule – 4)**			
List of Areas Prohibited for High-Rise Buildings			
SL.No.	**Ward No.**	**Block No.**	**Name of the Locality / Area**
1	**2**	**3**	**4**
1	---	---	Nil

MANUGURU MUNICIPALITY

ANNEXURE – I
(See Rule – 4)

List of sites in Old / Existing built-up areas / Congested areas / Settlement / Grama Kantam / Abadi

SL.No.	Ward No.	Block No.	Name of the Locality / Area	Remarks
1	2	3	4	5
1	Nil	Nil	Nil	This Municipality is newly constituted on 31-05-2005, this Municipality was covered under 1/70 Act. Tribal Act. The total maximum Municipal Area was covered in Govt. Land. No registration land and No Master Plan in this Municipality.

ANNEXURE – II
(See Rule – 4)

List of Areas Prohibited for High-Rise Buildings

SL.No.	Ward No.	Block No.	Name of the Locality / Area	Remarks
1	2	3	4	5
1	Nil	Nil	Nil	This Municipality is newly constituted on 31-05-2005, this Municipality was covered under 1/70 Act., Tribal Act. The total maximum Municipal Area was covered in Govt. Land. No registration land and No Master Plan in this Municipality

PALVANCHA MUNICIPALITY

ANNEXURE – I
(See Rule – 4)

List of sites in Old / Existing built-up areas / Congested areas / Settlement / Grama Kantam / Abadi

SL.No.	Ward No.	Block No.	Name of the Locality / Area
1	2	3	4
1	1	1	Gadiyakatta, Srinivasa Colony
2	1	2	Harijanawada
3	1	3	Chakali Bazar
4	2	1	Chakali Bazar
5	2	2	Gowndla Bazar, Harijanawada
6	4	5	Sanjay Nagar
7	5	4	Gandhinagar, Sainagar
8	5	6	Rajiv Nagar
9	7	1	Seetharampatnam
10	10	1	Chakali Bazar
11	13	1	Ramnagar
12	20	1,2	Indira Colony
13	20	3	Hamali Colony
14	21	2,3	Nehru Nagar
15	22	4	Vikalangula Colony
16	22	5	Jayamma Colony
17	22	6	Vanama Colony
18	23	1,2,3	Srinivasa Colony, Kuntinagula Gudem
19	23	4	Pillavagu
20	23	5	Kothuru
21	23	6	Petacheruvu
22	24	1,2,3	Bangarujala
23	25	2,3	Jagguthanda
24	26	1	Bangaru Ramaswamy Gumpu
25	26	2,3	Sekhrambanjar

ANNEXURE – II
(See Rule – 4)

List of Areas Prohibited for High-Rise Buildings

SL.No.	Ward No.	Block No.	Name of the Locality / Area
1	2	3	4
1	---	---	---

SATHUPALLI NAGARAPANCHAYATH			
ANNEXURE – I **(See Rule – 4)**			
List of sites in Old / Existing built-up areas / Congested areas / Settlement / Grama Kantam / Abadi			
SL.No.	**Ward No.**	**Block No.**	**Name of the Locality / Area**
1	**2**	**3**	**4**
1	H.No.10-1 to 10-282/1	---	Vengala Rao Nagara
2	H.No.11-1 to 11-94	---	Jalagam Nagar
3	H.No.8-1 to 8-162	---	Gandhi Nagar
4	H.No.9-1 to 9-259/1	---	Dwarakapuri Colony
5	H.No.9-259/1/1 to 9-323	---	Virat Nagar
6	H.No.7-42/1 to 7-160	---	Jawhar Nagar
7	H.No.12-1 to 12-200 H.No.13-12 to 13-207 H.No.14-1 to 14-238	---	NTR Nagar
8	N – H.No.5-178, 5-241 (Water tank road) S – H.No.4-17 to 5-2 E – H.No.5-2 to 5-241 W – H.No.4-17 to 5-178 (Ayyagaripeta Road No.1)	---	Ambedkar Nagar

ANNEXURE – II **(See Rule – 4)**			
List of Areas Prohibited for High-Rise Buildings			
SL.No.	**Ward No.**	**Block No.**	**Name of the Locality / Area**
1	**2**	**3**	**4**
1	---	---	---

YELLANDU MUNICIPALITY			
ANNEXURE – I (See Rule – 4)			
List of sites in Old / Existing built-up areas / Congested areas / Settlement / Grama Kantam / Abadi			
SL.No.	Ward No.	Block No.	Name of the Locality / Area
1	2	3	4
1	Nil	Nil	1. The Entire land within the Municipal limits is belongs to the Govt. and same was under singareni lease. 2. The above said mention list is not possible to shown since there is no sanctioned Master Plan to this Municipality.

ANNEXURE – II (See Rule – 4)			
List of Areas Prohibited for High-Rise Buildings			
SL.No.	Ward No.	Block No.	Name of the Locality / Area
1	2	3	4
1	Nil	Nil	1. The Entire land within the Municipal limits is belongs to the Govt. and same was under singareni lease. 2. The above said mention list is not possible to shown since there is no sanctioned Master Plan to this Municipality.

BHOOPALPALLY NAGARAPANCHAYAT			
ANNEXURE – I **(See Rule – 4)**			
List of sites in Old / Existing built-up areas / Congested areas / Settlement / Grama Kantam / Abadi			
SL.No.	**Ward No.**	**Block No.**	**Name of the Locality / Area**
1	**2**	**3**	**4**
1	H.No.1-1 to 1-117	---	Hanuman Nagar, Bhoopalpally (V)
2	H.No.1-118 to 2-End	---	Shanthi Nagar (Gramakantam) Bhoopalpally (V)
3	H.No.8-120 to 8-160	---	Banothwada, Bhoopalpally (V)
4	H.No.10-1 to 10-End	---	Indranagar, Akulavari wada, Kedalawada, Bhoopalpally (V)
5	H.No.1-1 to 3-7	---	Gaddainpally, Jangaid Village
6	H.No.3-8 to 5-55/9	---	Saggampally
7	H.No.5-56 to 8-83	---	Jangedu Village
8	H.No.8-84 to 10-86	---	Fakkirgadda
9	H.No.1-1 to 5-90	---	Pulluriramaiahpally Village
10	H.No.1-1 to 9-End	---	Kasimpally Village

ANNEXURE – II **(See Rule – 4)**			
List of Areas Prohibited for High-Rise Buildings			
SL.No.	**Ward No.**	**Block No.**	**Name of the Locality / Area**
1	**2**	**3**	**4**
1	H.No.8-118 to 8-127	---	Banothwada, Bhoopalpally (V)
2	H.No.2-30 to 2-56	---	Hanuman Nagar, Bhoopalpally (V)
3	H.No.2-122 to 2-172	---	Laxminagar (Gramakantam) Bhoopalpally (V)

JANGAON MUNICIPALITY

ANNEXURE – I
(See Rule – 4)

List of sites in Old / Existing built-up areas / Congested areas / Settlement / Grama Kantam / Abadi

SL.No.	Ward No.	Block No.	Name of the Locality / Area
1	2	3	4
1	4	12, 13	Beggars Colony
2	5	2,3,4,5	Ambedkar Nagar Colony
3	4, 3	1,2,3,4,5,6	Venkannakunta
4	5	1	Indira Nagar Colony
5	2	7	Sathram Locality
6	2	5, 6 Partly	Kurmawada
7	4	6,7,8	Dharmakancha
8	4,5	11, 1	Sanjay Nagar
9	4	9, 10	Sweepers Colony
10	2	1,2,3,4	Nagulakunta
11	1	6,7,8	Laxmibai Kunta
12	5	2	Minority Colony
13	1	4 Partly, 5 Partly	Waddera Wada
14	1	11 Partly	Weavers Colony
15	1	4 Partly	ABV Degree College area
16	5	2	Near TNGOs Colony
17	3	7,8	Reddy Street
18	4	1	Gundlagadda

ANNEXURE – II
(See Rule – 4)

List of Areas Prohibited for High-Rise Buildings

SL.No.	Ward No.	Block No.	Name of the Locality / Area
1	2	3	4
1	4	12, 13	Beggars Colony
2	5	2,3	Ambedkar Nagar Colony
3	4, 3	1,2	Venkannakunta
4	5	1	Indira Nagar Colony
5	2	7	Sathram Locality
6	2	5, 6 Partly	Kurmawada
7	4	6,7,8	Dharmakancha
8	4,5	11, 1	Sanjay Nagar
9	4	9, 10	Sweepers Colony
10	2	1,2	Nagulakunta
11	1	6,7,8	Laxmibai Kunta
12	5	2	Minority Colony
13	1	4 Partly, 5 Partly	Waddera Wada
14	1	11 Partly	Weavers Colony
15	1	4 Partly	ABV Degree College area
16	5	2	Near TNGOs Colony
17	3	7,8	Reddy Street
18	4	1	Gundlagadda

MAHABUBABAD MUNICIPALITY			
ANNEXURE – I (See Rule – 4)			
List of sites in Old / Existing built-up areas / Congested areas / Settlement / Grama Kantam / Abadi			
SL.No.	Ward No.	Block No.	Name of the Locality / Area
1	2	3	4
1	2	3	Mudirajuwada upto 2-3-61
2	2	5	Sundaraiah Bazar
3	3	1	Muthyalamma Temple and Venugopala Swamy temple area
4	3	2	Chakali Bazar
5	3	3	Bestha Bazar
6	3	5	Hanumanthuni Gadda

ANNEXURE – II (See Rule – 4)			
List of Areas Prohibited for High-Rise Buildings			
SL.No.	Ward No.	Block No.	Name of the Locality / Area
1	2	3	4
1	1	1	Mandulagudem
2	1	2	S.C.Colony
3	1	6	Nandhinagar, Dasari Bazar

NARSAMPET NAGARAPANCHAYATH

ANNEXURE – I
(See Rule – 4)

List of sites in Old / Existing built-up areas / Congested areas / Settlement / Grama Kantam / Abadi

SL.No.	Ward No.	Block No.	Name of the Locality / Area
1	2	3	4
1	2	---	Ramalayam
2	2	---	Guddelugula Bazar
3	2	---	NGOs Colony
4	2	---	Sneha Nagar
5	3	---	Vallab Nagar
6	3	---	S.C.Colony
7	4	---	Vaddera Colony
8	4	---	Jayalaxmi Centre
9	5	---	Saibaba Temple Back side area
10	5	---	MUPS OR R&B Office back side area
11	6	---	BSNL Tower area
12	7	---	CSI Church Back side area
13	8	---	Nethaji Road
14	9	---	Subhash Statue area
15	9	---	Venkateshwara Temple area
16	10	---	Hanuman Temple road
17	10	---	Gouda Sangam Road
18	10	---	Gangaputra Veedhi
19	11	---	Shivaji Road
20	11	---	S.C.Colony
21	12	---	Harijana Colony area
22	13	---	Sarojinidevi Road
23	14	---	Sarojinidevi Road
24	15,16,17	---	Sarojinidevi Road
25	18	---	Shanthi Nagar – I
26	18	---	Erukala Colony
27	18	---	Shanthi Nagar - II
28	18	---	Nehru Nagar
29	18	---	Jeedaiahpalle School area
30	19	---	Kakatiya Nagar
31	19	---	Sanjay Gandhi Nagar
32	19	---	Pochamma Colony

ANNEXURE – II
(See Rule – 4)

List of Areas Prohibited for High-Rise Buildings

SL.No.	Ward No.	Block No.	Name of the Locality / Area
1	2	3	4
1	2	---	Ramalayam
2	2	---	Guddelugula Bazar
3	2	---	NGOs Colony
4	2	---	Sneha Nagar
5	3	---	Vallab Nagar
6	3	---	Vallab Nagar S.C.Colony
7	4	---	Vaddera Colony
8	4	---	Jayalaxmi Centre
9	5	---	Saibaba Temple Back side area
10	5	---	MUPS OR R&B Office back side area
11	6	---	BSNL Tower area
12	7	---	CSI Church Back side area
13	8	---	Nethaji Road
14	9	---	Subhash Statue area
15	9	---	Venkateshwara Temple area
16	10	---	Hanuman Temple road
17	10	---	Gouda Sangam Road
18	10	---	Gangaputra Veedhi
19	11	---	Shivaji Road
20	11	---	S.C.Colony
21	12	---	Harijana Colony area
22	13	---	Sarojinidevi Road
23	14	---	Sarojinidevi Road

24	15,16,17	---	Sarojinidevi Road
25	18	---	Shanthi Nagar – I
26	18	---	Erukala Colony
27	18	---	Shanthi Nagar - II
28	18	---	Nehru Nagar
29	18	---	Jeedaiahpalle School area
30	19	---	Kakatiya Nagar
31	19	---	Sanjay Gandhi Nagar
32	19	---	Pochamma Colony

PARKAL NAGARAPANCHAYATH			
ANNEXURE – I **(See Rule – 4)**			
List of sites in Old / Existing built-up areas / Congested areas / Settlement / Grama Kantam / Abadi			
SL.No.	**Ward No.**	**Block No.**	**Name of the Locality / Area**
1	**2**	**3**	**4**
1	18-24	18 – End	Wadla Wada, Kummari Wada, Gouda Wada
2	14-1,15-1,16-1 and 17-1	End	Parkala Harijana Wada
3	10-1, 13-1	10-23, 13-End	Gandra Wada
4	6-404	6-464	Rajipeta More Wada
5	5-94	5-End	BC Colony
6	4-3	4-273	Rajipeta SC Colony
7	20-473	20-End	Madharam Harijana Wada
8	20-371	20-390	Akula Wada
9	11-43	11-66	Kammari Wada
10	19-184	19-223	Chakali Wada
11	7-14	7-51	Mudhiraj Wada
12	8-3	8-110	Muslim Wada & Gaddam Wada

ANNEXURE – II **(See Rule – 4)**			
List of Areas Prohibited for High-Rise Buildings			
SL.No.	**Ward No.**	**Block No.**	**Name of the Locality / Area**
1	**2**	**3**	**4**
1	19-36	19-101	Pitta Wada
2	20-421/1	20-460/1	Mamatha Nagar
3	3-1099/1	3-1138/3	Srinivasa Colony

WARANGAL MUNICIPAL CORPORATION			
ANNEXURE – I (See Rule – 4)			
List of sites in Old / Existing built-up areas / Congested areas / Settlement / Grama Kantam / Abadi			
SL.No.	Ward No.	Block No.	Name of the Locality / Area
1	2	3	4
1	25	8,9	Bapuji Nagar (South), Bhavaninagar, Darga Road, Kazlpet (P), Shanti Nagar, Bapuji Nagar (North)
2	25	10	Ambedkar Nagar, Bapuji Nagar (North)
3	25	5	Vishnupuri
4	1	2	Rahmatnagar, Kazipet
5	1	1/P	Venkatadrinagar, Siddarathanagar
6	24	7/P	Fathimanagar, Darga Road, Kazipet, Pragathinagar
7	24	4/P	Shastrinagar, Netajinagar, Kazipet Jagir, Darga Kazipet
8	2	10/P	Waddepally Village (Old Abadi)
9	2	1	Naimnagar, Sammaiahnagar, Saraswathi Nagar
10	2,5	2,10	Kishanpura, Naimnagar, Nehrunagar, Rajaji Nagar, Ramnagar, Kishanpura
11	3	9	Reddy Colony, Gudibandal, Indiranagar, Yadavanagar
12	3,4	5,9	Tailor Street, Gudibandal, Kumarpally, Engulagadda. Tailor street, Kumarpally, CVPR Complex Area
13	13	1,2,3,4,5,6, 7/P,8/P	Bondalakunta, Matwada, Papaiahpet Cheman, Bondalakunta, Matwada, Matwada, Matwada, M.G.Road Matwada, Matwada Matwada, Matwada
14	13,14,9	7/P,4/P, 6/P	Yellambazar, Mandibazar, Matwada, Moulali street Yellambazar, Mandibazar, Matwada Yellambazar, Mandibazar, JPN Road ara
15	15	5/P, 6	Papaiahpet, Papaiahpet Cheman Ramannapet, Papaiahpet Cheman
16	15	7,8,9,10,11	Ramannapet, Papaiahpet, Ramannapet, Ramannapet, Ramannapet, Ramannapet,
17	9	10	Pinnavari street, Vishwakarma veedhi, JPN Road, Durgeshwara Swamy Temple, Chakilam Damodar Galli
18	9	5/P	Mandi Bazar, Girmajipet, JPN Road Area
19	9	2,3,4,5/P, 6,	Girmajipet, Charbouli, JPN Road, Girmajipet, Girmajipet, Charbouli, Girmajipet, Mandi Bazar, JPN Road, Yellam Bazar, JPN Road
	10	5,6,7,8,9, 10,	Girmajipet, Girmajipet, Charbouli, Girmajipet, Charbouli, Girmajipet, Laxmipuram Girmajipet, Charbouli, Girmajipet, Charbouli,
20	17	4/P, 5/P	Karimabad, Karimabad
21	17	5/P, 8,9,10	Urus, Urus, Urus Bodral, Urus, Karimabad
22	19	5/P,6,7,8,9	Rangasaipet,
23	16	4/P, 10	Shiva Nagar
24	16	1/P	SRR Thota, Railwaygate, Karimabad
25	6,7	3,5,8,2,3,4	Brahmanawada,Imilipura,Pinjarlastreet,Sagaraveedi, Machilibazar, Machilibazar, Brahmanawada, Chowrastha, Hanamkonda (V), Ragannadarwaja Machilibazar, Machilibazar Gundam, Machilibazar, Rajputwada
26	6	4/P	Brahmanawada

ANNEXURE – II (See Rule – 4)			
List of Areas Prohibited for High-Rise Buildings			
SL.No.	Ward No.	Block No.	Name of the Locality / Area
1	2	3	4
1	---	---	All areas mentioned in Annexure – I (Except plos abutting to the 18 mts and above road)

At present there is no Grama Kantam / Villages Settlement is existing in the City Area, but the areas mentioned in Annexure – I are congested areas covered with old existing buildings and narrow roads. There are (94) Nos. of Notified Slums and (88) Nos. of Non-Notified Slums in the Town.

ANNEXURE-III
(Rule-7.d)
GOVERNMENT OF ANDHRA PRADESH
ABSTRACT

Municipal Administration & Urban Development Department - Andhra Pradesh Rules for Construction and Regulation of Multiplex Complexes, 2007 - Notification -Issued.

Municipal Administration & Urban Development (M1) Department

G.O.Ms.No.486 **Dated:07-07-2007,**

ORDER:

The following Notification shall be published in the Extraordinary Issue of the Andhra Pradesh Gazette Dated 09-07-2007.

NOTIFICATION

In exercise of powers vested in Section 58 of the Andhra Pradesh Urban Areas (Development) Act, 1975, Section 585 of the HMC Act, 1975, Section 44 (2) (v) of the AP Town Planning Act, 1920, Section 326 (1) of the AP Municipalities Act, 1965 and Section 125 of the Andhra Pradesh Panchayat Raj Act, 1994, the Government of Andhra of Pradesh hereby issue the following Rules.

1. These Rules may be called "The Andhra Pradesh Rules for Construction and Regulation of Multiplex Complexes, 2007"
2. (i) These Rules shall be applicable to the whole of the State of Andhra Pradesh.
   (ii) These Rules shall come into force from the date of publication in the Andhra Pradesh Gazette. All existing rules, regulations, bylaws, orders that are in conflict or inconsistent with these Rules shall stand modified to the extent of the provisions of these rules.
   (iii) Provisions of the Andhra Pradesh Cinemas (Regulation) Act, 1955 will need to be strictly adhered to. It is, however, clarified that the rules of the Andhra Pradesh Cinema (Regulation) Rules 1970 will apply to the multiplex buildings as a whole and not the individual cinema halls within it. The provisions of the said Andhra Pradesh Cinema (Regulation) Rules 1970 are deemed to be relaxed to allow activities mentioned in the definition of Multiplex as given below;
3. **Definitions**:
   (a) "Multiplex complex" shall mean an integrated entertainment and shopping center/complex or a shopping mall and having at least three (3) cinema halls/screens. Apart from Cinema Halls, the entertainment area may have restaurants, cafeteria, fast food outlets, video games parlors, pubs, bowling alleys, health spa/ centers, convention centers, hotels and other recreational activities. However, habitable areas like hotels, service apartments shall not be allowed in the same block where the Multiplexes are set up and shall be allowed only as a separate block. Such a Complex may be spread over the site or be in one or more blocks which may be high-rise buildings or normal buildings.
   (b) 'Building Approving Authority' means in UDA areas the Commissioner of Municipal Corporation in municipal Corporation area or the Vice-Chairman of the Urban Development Authority in areas outside the limits of Municipal Corporation as the case may be. In case of areas falling in non UDA areas, Building Approval Authority will be respective local body. However they shall obtain prior Technical Approval from the Director of Town & Country Planning.
   (c) "Licensing Authority: means the licencing authority under the AP Cinema (Regulation) Act, 1955 and rules made there under for issuing licences for cinema theatres in the Multiplex Complex.
   (d) Words, expressions and definitions not defined herein shall have the same meaning as given in the National Building Code of India, 2005.
4. **Redevelopment of existing cinema halls into Multiplex Complex**:
   Conversion of existing cinema halls' to multiplex complexes will be allowed if they comply with the requirements given hereunder.
5. **Site Requirements for Multiplex Complexes:**
   (i) The minimum size of plot for a Multiplex shall be 3000 sq m.
   (ii) The minimum abutting road width for a multiplex shall be 18 m existing. The abutting road has to be black-topped with minimum 2 -lane carriageway. Service roads are required for sites abutting 30 m and above roads and approach shall be allowed only through service road. The width of the service road shall be minimum 7m with minimum 2-lane black topped carriageway and shall be undertaken by the owners of such buildings to the extent of the width of their site.
6. **Location Criteria:**
   (A) The locational criteria of a Multiplex Complex shall be the same as given in the Andhra Pradesh Cinemas (Regulation) act, 1955 and Clause 3.2 of Part 4 of National Building Code. And in addition to this, shall comply with Clause 3.2 of Part 4 of National Building Code (wherever applicable).
   The location shall be further subject to:
   i) The requirement of furnishing traffic impact study and based on the traffic impact study a traffic management plan for such Complex will be required to be undertaken through a qualified consultant.
   ii) NOC from the Police Department (Traffic) and Director-General of Fire Services will be a pre-requisite for considering the building permission by the Building approving authority.

iii) Multiplex Complexes shall not be allowed in Congested areas and settlement areas/ Abadi /Gram khantam areas, in areas restricted for High-rise buildings and abutting major road junctions.
iv) Multiplex Complexes shall not be allowed in purely residential areas/localities.
v) Where zoning regulations of a statutory Plan/Scheme are in force, multiplex complex site location shall be governed as per such zoning regulations.

(B) Multiplexes may be permitted in a zone or scheme declared as tourism zone/area along with other recreational facilities.

(C) Government may by Notification, declare certain roads in any UDA/local area where Multiplex Complexes shall not be allowed.

7. **Building Requirements:**

7.1. The building bulk, coverage and height shall be governed by the minimum alround setbacks to be left, the organised open spaces to be left and the height restrictions imposed by the Airport authority (if applicable) / Defence authorities (if applicable) and Fire Services Department and the Area-level Impact fee on built up area required to be paid, as applicable.

7.2. Every application to construct or reconstruct a Multiplex Complex shall be made in the prescribed form and accompanied by detailed plans and floor plans of all floors drawn by a registered architect, along with complete set of structural drawings and detailed specifications duly certified by a qualified structural engineer. Necessary prior No Objection Certificate shall be submitted from the Airport Authority (if applicable), and Directorate of Fire Services along with the application. The fire safety requirements shall be duly certified by a fire engineer.

7.3. The minimum alround setbacks for a multiplex Complex shall be as follows:

(A) **TABLE**

Height of the Building (in m.)	Minimum front open space (in m.)	Minimum open space on reaming sides(in m.)
1	**2**	**3**
Up to 15	12	6
Above 15 & Upto 21mt		7
Above 21mt & Upto 24 mt		8
Above 24 m & Upto 27 mt		9
Above 27 m & Upto 30 mt		10
Above 30 m & Upto 34 mt		11
Above 35 m & Upto 40 mt		12
Above 40 m & Upto 45 mt	13	13
Above 45 m & Upto 50 mt	14	14
Above 50 m	15	16

i) Provided the maximum height of the block/portion wherein the Multiplex screens are set up shall not exceed 30 metres;
ii) Provided in case of sites located in Gram Panchayat areas and outside UDA areas, the maximum height of all blocks permissible shall be 30 metres;
iii) Provided that in case of two or more blocks in the same site, the space between the two blocks shall be as given in Column (3) of the above Table.
iv) Provided that for heights of blocks above 30 m and up to 45 m, the minimum abutting road width shall be 24 m while for blocks of height above 45 m, the minimum abutting road width shall be 30m

(B) No relaxation in the above-mentioned open Spaces or transfer of setbacks shall be allowed:

7.4. **Construction Requirements**:

i) The building requirements, building services, specifications and standards specified in the National Building Code, 2005 shall be complied with.
ii) Construction of such buildings shall be undertaken by owners by engaging registered architect, licenced builder, fire engineer and licenced structural engineer. The designs and building plans shall be countersigned by the owner, licenced builder, registered architect, licenced engineer, qualified & licenced structural Engineer and a fire engineer who shall be responsible for the supervision, structural safety, fire safety and compliance of the specifications for such buildings.
iii) Buildings shall be designed for earth quake resistance and resistance for other natural hazards. The Completion Certificate obtained from the registered architect shall mention that the norms have been followed in the design and construction of buildings for making the buildings earthquake resistant, compliance with structural safety and fire safety requirements as per the relevant provisions of National Building Code & A.P Fire Services Act.
iv) The exit and fire safety requirements shall be in accordance with Part-IV of National Building Code of India. The fire safety measures shall be undertaken by engaging the services of a fire protection engineer. The following minimum Fire Fighting Installations are to be provided as per Table 23, Part - 4 of National Building Code of India, 2005:

Sl.No	Fire Fighting Installation
1.	Fire Extinguishers as per IS 2190
2.	Hose reel
3.	Wet riser
4.	Yard hydrant
5.	Automatic sprinkler system in entire Building

6.	Automatic detection and alarm system in entire Building (except Cellars)
7.	Manually operated electrical alarm system in entire Building (except Cellars)
8.	Underground static water tank of 2,00,000 Liters capacity
9.	Terrace tank of 20,000 Liters capacity
10.	Two Electrical Main pumps of 2850 LPM capacity
11.	Diesel pump (Standby of 2850 LPM capacity
12.	Electric Jockey pump of 180 LPM capacity

v) The work of other building services like sanitation, plumbing, lifts, electrical installations, and other utility services shall as per National Building Code standards and shall be executed under the planning, design and supervision of qualified and competent technical personnel.

vi) The means of escape shall be provided as per the Clause 4 (Exit Requirements), Part 4 of National Building Code of India.
   (a) Capacities of Exits shall be calculated as per Clause 4.4, Part 4 of NBC, 2005.
   (b) Arrangement of Exits shall be as per Clause 4.5, Part 4 of NBC, 2005.
   (c) Number of Exits shall be provided as per Clause 4.6, Part 4 of National Building Code, 2005.
   (d) Doorways shall be provided as per Clause 4.7, Part 4 of National Building Code, 2005.
   (e) Corridors and Passageways shall be provided as per Clause 4.8, Part 4 of National Building Code, 2005.
   (f) Internal Staircases shall be provided as per Clause 4.9, Part 4 of National Building Code, 2005.
   (g) Pressurization of Staircases shall be provided as per Clause 4.10, Part 4 of National Building Code, 2005.
   (h) External Staircases shall be provided as per Clause 4.11, Part 4 of National Building Code, 2005.
   (i) Horizontal Exits may be provided as per Clause 4.12, Part 4 of National Building Code, 2005.
   (j) Fire Tower shall be provided as per Clause 4.13, Part 4 of National Building Code, 2005.
   (k) Ramps shall be provided as per Clause 4.14, Part 4 of National Building Code, 2005.
   (l) Fire Lift shall be provided as per Clause 4.15, Part 4 of National Building Code, 2005.
   (m) Emergency and Escape Lighting shall be provided as per Clause 4.16, Part 4 of National Building Code, 2005.
   (n) Illumination of Means of Exit shall be provided as per Clause 4.17, Part 4 of National Building Code, 2005.
   (o) Fire Detection and Warning shall be provided as per Clause 4.18, Part 4 of National Building Code, 2005

vii) **"SMOKE MANAGEMENT**: The following measures are to be provided to prevent the spread of smoke easily to the other floors, which may affect the life safety of the occupants particularly, the Cinema viewers;
   (A) For Types 1 to 3 constructions as given Clause 3.3 in the National Building Code (Part-IV), a doorway or opening in a separating wall on any floor shall be limited to 5.6m 2 in area with a maximum height/width of 2.75 m. Every wall opening shall be protected with fire-resisting doors having the fire rating of not less than 2 h in accordance with accepted standard [4(7)].All openings in the floors shall be protected by vertical enclosures extending above and below such openings, the walls of such enclosures having a fire resistance of not less than 2 h and all openings therein being protected with a fire resisting assembly as specified in clause 3.4.8 & 3.4.9 of Part-4 of NBC.
   (B) Openings in walls or floors which are necessary to be provided to allow passages of all building services like cables, electrical wirings, telephone cables, plumbing pipes,etc,shall be protected by enclosure in the form of ducts/shafts having a fire resistance not less than 2 h. The inspection door for electrical shafts/ducts shall not be less than2 h and for other services shafts/ducts, the same shall have fire resistance not less than 1h. Medium and low voltage wiring running in shafts/ducts, shall either be armored type or run through metal conduits. Further, the space between the conduits pipes and the walls / slabs shall be filled in by a filter material having fire resistance rating of not less than 1 h as per clause 3.4.8.3 of Part-4 of National Building Code.
   (C) Openings in separating walls and floors-Attention shall be paid to all such factors as will limit fire spread to these opening and maintain fire rating of the structural member. Every wall opening shall be protected with Fire resisting doors having fire rating of not less than two hours. All openings in the floors shall be protected by vertical enclosures extending above and below such openings, the wall of such enclosures having a fire resistance of not less than two hours and all openings therein being protected with a fire resisting assemble as per Clause 3.4.8, Part 4 of National Building Code of India,2005.
   (D) Every vertical opening between the floors shall be suitably enclosed or protected, as necessary to provide the following:
      i) Reasonable safety to the occupants while using the means of egress by preventing spread of fire, smoke, or fumes through vertical openings from floor to floor to allow occupants to complete their use of the means of egress. Further it shall be ensured to provide a clear height of 2100 MM in the passage/escape path of the occupants.

ii) Limitation of damage to the building and its contents (Clause 3.4.8.4) Part -- 4 of National Building Code of India, 2005.

(E) Where openings are permitted, they shall not exceed three-fourths the area of the wall in the case of an external wall and they shall be protected with fire resisting assemblies or enclosures having fire resistance equal to that of the wall or floor in which these are situated. Such assemblies and enclosures shall also be capable of preventing the spread of smoke or fumes through the openings so as to facilitate the safe evacuation from the building in case of fire.

(F) **(i)** Air conditioning and ventilating systems shall be so installed and maintained as to minimize the danger of spread of fire, smoke or fumes from one floor to other or from outside to any occupied building or structure (Clause 3.4.11.1) Part 4 of National Building Code of India 2005.

(ii) Air-conditioning and ventilating systems circulating air to more than one floor or fire area shall be provided with dampers designed to close automatically in case of fire and thereby preventing spread of fire or smoke and shall be in accordance with the accepted standard [4(10)]. Such a system shall also be provided with automatic controls to stop fans in case of fire, unless arranged to remove smoke from a fire, in which case these shall be designed to remain in operation

(iii) Effective means for preventing circulation of smoke through the A C system in case of fire in air filters or from other sources drawn into the system, and shall have smoke sensitive devices for actuation in accordance with the accepted standards (Clause 3.4.11.3) Part 4 of National Building Code of India 2005.

(iv) Separate air handling units for each floor shall be provided to avoid the hazards arising from spread of fire and smoke through air conditioning ducts (Clause 3.4.11.4) Part 4 of National Building Code of India 2005.

(v) Fire Dampers shall be provided in the AC system in accordance with the accepted standards designed so as to close automatically in case of fire and thereby preventing spread of fire or smoke.

(G) Pressurization of stair cases shall be done as per Clause 4.10, Part 4 of National Building Code of India 2005.

(H) Provision of pressurized lift lobby with self-closing smoke stop doors of 2 hour Fire resistance, one in the lift lobbies of all the cellars.

(I) Smoke venting facilities for safe use of exits shall be provided as per Clause 3.4.12, Part 4 of National Building Code of India 2005.

(J) Basement ventilation shall comply to Clause C 1.6 of Annexure-C of Part 4 of National Building Code of India, 2005.

7.5. **Parts of the Building requirements**:

The parts of the Building requirements shall conform to National Building Code of India, 2005 with regard to:

A. MATERIALS: Flame retardant material only should be made use for interior decoration and upholstery to prevent generation of toxic smoke/flames. The surface interior finishes shall comply as per Clause 3.4.15, Part 4 of National Building Code of India 2005.

B. COMPARTMENTATION: (i) The Building shall be suitably compartmentalized so that Fire/Smoke remained confined to the area where Fire Incident has occurred and does not spread to the remaining part of the Building as per Clause C - 9, Annexure "C", Part 4 of National Building Code of India, 2005.

(ii) Fire doors with 2 hour fire resistance shall be provided at appropriate place along the escape route and particularly at the entrance to the lift lobby and stair well to prevent spread of fire and smoke as per Clause 4.2.9, Part 4 of National Building Code of India 2005.

(iii) In Multiplexes, large inter floor openings may be there, in which conventional compartmentation may be difficult. In such case, special compensative measures are required as per reputed Standards. (eg. NFPA, 1992).

C. FIRE LIFT: Fire lifts complying to clause C1.5 Q of Annexure-C of Part 4 of National Building Code of India 2005 shall be provided.

D. EMERGENCY LIGHTING: Illumination of means of exit in stair case and corridors shall comply with Clause C.1.14 of Annexure-C, Part 4 of National Building Code of India 2005.

E. FIRE OFFICER: Qualified Fire Officer with experience of not less than 3 years shall be appointed who will be available on the premises as per Clause C 6, Annexure-C, Part 4 of National Building Code of India 2005.

F. BUILDING EVACUATION SUPERVISOR: Appointment of Building Evacuation Supervisor as per Annexure "E", Part 4 of National Building Code of India, 2005 for conducting periodical Fire Drills and to ensure safe evacuation in case of any emergency.

7.6. Seating arrangements in theaters:

i) The seating arrangements shall conform to the Exit facilities as per Clause 6.4.4, Part - 4 of National Building Code of India, 2005."

ii) Notwithstanding (i) above, the distance between the screen and the first front row of seats shall not be less than the height of the screen or the top picture height of the screen.

7.7. Parking Requirements:

a) The parking requirements within the site shall be as follows:

Type of Building	Parking area to be provided as percentage of total built up area (inclusive of all internal aisles, driveways, stairs, etc.	
	In Municipal Corporation area	In other areas
Multiplex complexes (inclusive of all activities aeras)	60%	50%

b) The parking spaces may be provided in:

i) basements or cellars or

ii) on stilt floor or

iii) In the open space over and above the minimum required set-backs (except the front set-back) to be left around the building with adequate vehicular access, aisle, drives, ramps required for maneuvering of vehicles.

iv) Multi-level parking complex adjoining to the complex within the site may be considered provided that a minimum clear open space of 6m from the site boundary is ensured.

7.8. Landscaping and greenery:

i) A minimum 2 m wide green planting strip in the periphery on all sides within the set-backs are required to be developed and maintained.

ii) In addition to (i) above, an organized open space of at least 10% of total site area shall be maintained and utilized as greenery over and above the mandatory alround set-backs. This could be part of the interior open space or be in one or more pockets.

iii) The landscaping and greenery shall be undertaken as per the guidelines given in the National Building Code and subject to provision of hard and motorable leveled ground to facilitate operation of Hydraulic Platform.

iv) Trees shall be planted within the periphery of the site at the rate of 1 tree per 100 sq.m of site area.

8. City / Area level impact fee payable:

In addition to the building permit fees and other charges payable, City / Area level impact fee shall be payable for heights of floors above 15m where the height of the building or block is more than 15m at the following rates:

Height	Rate in Rs. Per sq.m of Built up area		
	Metro areas (Hyderabad / Visakhapatnam / Vijayawada Mpl. Corps.)	Other Mpl. Corps.	Other Mpltys & Panchayat areas
Above 15 m and upto 24 m	1000	800	500
Above 24 m and upto 30 m	1500	1200	800
Above 30 m and upto 50 m	2000	1500	1000
Above 50 m	2500	2000	1500

i) While calculating the Impact fee parking areas / blocks will be exempted.

ii) The Impact fees so collected by the Building approving authority shall be maintained in a separate escrow account and utilized only for upgrading of infrastructure and services in the area concerned.

iii) **Fire Precaution Fund**: A fee at the rate of Rs.10 per sq.m of built up area shall be payable towards Fire Precaution Fund to the Fire Services Department.

9. Building Permission to be obtained before commencement of construction:

After obtaining the provisional license and site clearance from the Licensing authority, the owner / applicant shall obtain necessary building permission from the Building approving authority as the case may be, before commencing the construction.

10. Occupancy Certificate to be obtained:

The final license shall be issued by the Licensing Authority only after the owner / applicant submits a final NOC from the Fire Service department and an Occupancy Certificate in the prescribed format from the Building Approving Authority.

For obtaining the Occupancy Certificate, the owner shall submit a notice of completion through the registered architect and licensed builder / developer along with prescribed documents and plans and Final NOC from the Fire Service Department to the Building Approving Authority. The Building Approving Authority on receipt of such notice of completion shall undertake inspection with regard to the following aspects:

(a) Number of floors.
(b) External set-backs
(c) Parking space provision
(d) Abutting road width,

and shall communicate the approval or refusal of the occupancy certificate within 15 days.

11. **Maintenance & Management**:
Such multiplex complexes shall be under the overall control and management of a single management body who shall be responsible for the public safety, maintenance and public convenience / amenities.

(A copy of this notification is available on the Internet and can be accessed with the address www.aponline.gov.in)

(BY ORDER AND IN THE NAME OF THE GOVERNOR OF ANDHRA PRADESH)

S.P.SINGH,
PRINCIPAL SECRETARY TO GOVERNMENT

ANNEXURE – IV
(Rule-7.e)
GOVERNMENT OF ANDHRA PRADESH
ABSTRACT

Municipal Administration & Urban Development Department – The Andhra Pradesh Fire Prevention and Safety Measures in High-rise Hospital Buildings (above 30m height) Rules, 2011 - Orders – Issued.

Municipal Administration & Urban Development (M1) Department

G.O.Ms.No.2 **Dated: 03.01.2011**
Read the following:

1. G.O.Ms.No.45 MA&UD (M1) Dept., Dated 04.02.2006
2. From the Director General Fire & Emergency Services Department, A.P. Hyderabad, Lr.No.2444/S2/2008, Dated 07.11.2008 & 03.03.2010.
3. G.O.Ms.No.244 MA&UD (M1) Dept., Dated 07.03.2009.
4. From Commissioner, GHMC Lr.No.218/AD/FPWGHMC/ 2010 dt:30.06.2010.
5. Govt Lr.No. 803/M1/2007 dt: 21.08.2010
6. From Home (Pri.A2) Dept, U.O.No.13734/Pri.A/A2/2008-9, dt:18.11.2010

* * *

O R D E R:

In the GO 1st read above, orders were issued constituting High Power Committee pursuant to the Hon'ble High Court orders dated 24.01.2006 in W.P.No.26365 of 2005 to go into all aspects of buildings constructed (Multistoried or otherwise) without obtaining No Objection Certificate from Fire Service Department in violation of statutory provisions and to make comprehensive suggestions for taking remedial steps for Fire Protection and Safety Measures in all such buildings.

2. The Director General of Fire & Emergency Services, A.P. Hyderabad in her letter 2nd read above has informed that according to Section 13 (2) of the Andhra Pradesh Fire service Act,1999 " the Director General or any member of the service duly authorized by him in this behalf, shall within sixty days of receipt of such application, on being satisfied about the provision of fire prevention and safety measures as stipulated in the National Building Code of India, as amended from time to time or any other law for the time being in force regulating such purpose or activity, shall issue a no objection certificate with such conditions as may be considered necessary and if not so satisfied, reject the same for reasons to be recorded in writing". She has further informed that " According to note 12, table 23 part 4 of National Building Code of India, 2005, buildings above 30 Mts height not to be permitted for Group "B" (Educational), Group "C" (Residential), Group "D" (Assembly) and Group "E" (Mercantile) Occupancies". She has also informed that so far, two applications are received for the issuance of NOC for construction of Hospital Buildings of above 30 mts and requested the Government to issue guidelines on par with multiplex guidelines for construction of hospitals at a height of more than 30 mts by Following international standards of design, construction and operational management.

3. In the High Power Committee meeting held on 06-03-2010, it was decided that the Commissioner, Greater Hyderabad Municipal Corporation, Hyderabad may engage a reputed consultant for preparation of guidelines for fire prevention and safety measures for the hospital buildings above 30 meters of height and place the report before the High Power Committee. Pursuant to the above, the Commissioner, Greater Hyderabad Municipal Corporation, Hyderabad has engaged the services of JNTUH and furnished the Draft Fire Safety Guidelines for High-rise Hospitals vide reference 4th read above.

4. After due deliberations and discussions, the High Power Committee has accepted the report of Fire Safety Guidelines for High-rise Hospital Buildings prepared by JNTU, Hyderabad along with additional fire safety measures suggested by the Director General, State Disaster Response and Fire Services, A.P., Hyderabad.

5. Government after careful examination of the matter and the recommendations of High Power Committee and the additional fire safety measures suggested by Director General, State Disaster Response and Fire Services, A.P., Hyderabad and also as recommended by Home Department, hereby approve the same and issue the following rules for Fire prevention and Safety Measures to be adopted in High-rise Hospital Buildings of above 30 mts height.

6. A copy of these rules (containing 40 pages) is available on the internet and can be accessed with the address www.aponline.gov.in

7. The following notification will be published in the Andhra Pradesh Gazette.

N O T I F I C A T I O N

In exercise of the powers conferred by Section 44(1) of the Andhra Pradesh Town Planning Act, 1920, Section 585 of the Greater Hyderabad Municipal Corporation Act, 1955, Section 326(1) of the Andhra Pradesh Municipalities Act, 1965, Section 58 of the Andhra Pradesh Urban Areas (Development) Act, 1975, Section 268 of the Andhra Pradesh Panchayat Raj Act, 1994, and Section 56 of the Hyderabad Metropolitan Development Act, 2008, the Government of Andhra Pradesh hereby make the following Rules for prevention of Fire and Safety measures in High-Rise Hospital Buildings.

Short title, Extent and commencement	1. (1) These rules may be called the Andhra Pradesh Fire Prevention and Safety Measures for High–rise Hospital Buildings Rules, 2011.
	(2) They shall be applicable in all Municipal Areas and Urban Development Areas and Hyderabad Metropolitan Development Area in the whole of the State of Andhra Pradesh.

	(3) They shall come into force on such date/dates as may be specified by the Government
Definitions	2. In these rules, unless the context otherwise requires,
	(a) 'Building' means a building intended for the use of a hospital of the height of above 30 meters ;
	(b) 'Municipal Laws' means,-
	(i) the Andhra Pradesh Town Planning Act, 1920.
	(ii) the Greater Hyderabad Municipal Corporation Act, 1955 in respect of GHMC
	(iii) the Visakhapatnam Municipal Corporation Act, 1979 in respect of the Visakhapatnam Municipal Corporation.
	(iv) the Vijayawada Municipal Corporation Act, 1981 in respect of Vijayawada Municipal Corporation.
	(v) The Andhra Pradesh Municipal corporation Act, 1994 in respect of the Municipal Corporations;
	(vi) the Andhra Pradesh Municipalities Act, 1965 in respect of the Municipalities;
	(vii) the Andhra Pradesh Urban Areas (Development) Act, 1975 ;
	(viii) the Andhra Pradesh Panchayata Raj Act, 1994 in respect of the Nagar Panchayats and
	(ix) The Hyderabad Metropolitan Development Authority Act, 2008 (Act 8 of 2008)
	(c) words used but not defined in the rules shall have the meaning assigned to in the Municipal Laws and the Andhra Pradesh Fire Services Act.
Application of Bye-Laws and Rules framed under the Municipal Laws	3. All Bye-laws made under the Municipal Corporation Laws and all Rules framed under the Andhra Pradesh Municipalities Act, 1965 , the Andhra Pradesh Town Planning Act, 1920, the Andhra Pradesh Urban Areas (Development) Act, 1975 and the Hyderabad Metropolitan Development Authority Act, 2008 shall mutatis mutandis apply subject to such variations as may be specified in these Rules: Provided that the said Rules or Bye Laws in so far as they are not inconsistent with these rules shall continue to be applicable as those Bye-Laws and Rules are as applicable to the Municipal Corporation or Municipalities or Urban Areas or Hyderabad Metropolitan Development Area as the case may be.
Annexure	4. The Annexure shall form part and parcel of these rules, which specify the requirements to be complied with by all persons for construction of Buildings.

ANNEXURE

1.0 OPEN SPACES

In order to facilitate firefighting operations and also prevent fire exposure to adjacent buildings, it is essential to have adequate open spaces around the building.

Open spaces around the building shall be as per section 8.2.3.1 Table 2, NBC part III

Height of the Building (in mtrs.)	Minimum open space on all sides (in mtrs.)
Above 30 m & up to 35 m	11
Above 35 m & up to 40 m	12
Above 40 m & up to 45 m	13
Above 45 m & up to 50 m	14
Above 50 m & up to 55 m	15
Above 55 m & up to 60 m	16

a) The Maximum permissible height of Hospital Buildings shall be 60.00 meters
b) The height of each floor shall be not less than 4.0 meters
c) No relaxation in the above mentioned open spaces in any case including road widening shall be allowed.
d) Minimum 7 meters wide hard leveled motor able open to sky drive-way shall be provided around the building for the movement and operation of specialized fire vehicles e.g. Hydraulic Platform, Turn Table Ladder, etc.
e) Abutting Road on any side shall not be considered as open space for this purpose.

2.0 FIRE-RESISTIVE REQUIREMENTS

2.1 EXTERIOR WALLS, COLUMNS AND BEAMS

Load bearing exterior walls shall be 3 hour fire resistance provided the building is protected with automatic sprinkler system.
Columns and beams shall be 3 hour fire resistance provided the building is protected with automatic sprinkler system.
Non-load bearing exterior walls shall be 2 hour fire resistance provided the building is protected with automatic sprinkler system.
Opening protection, where required, shall correspond to the rating of the exterior wall. The allowable maximum area of exterior wall openings shall be in accordance with IBC Table 704.8.

2.2 INTERIOR WALLS

Load bearing interior walls shall have minimum 3 hour fire resistance rating provided the building is protected with automatic sprinkler system. They shall be permitted to be reduced to 2 hour fire resistance rated based on compliance with the high-rise provisions in NFPA 5000, Section 33.1.3 as follows:

1. Exits are constructed as smoke proof enclosures;

2. Sprinkler control valves with supervisory initiating devices, and water flow initiating devices are provided on each floor; and
3. There are no areas that exceed the maximum allowable quantities per control area in accordance with NFPA 5000, Section 34.1.3.

Non-load bearing interior walls shall be permitted to have no fire resistance rating based solely on the specified construction type herein, provided the building is protected with an approved automatic sprinkler system. Interior walls shall be fire resistance rated where required by other provisions in this code.

2.2.1 Separation of Occupancies
Where separated use design is employed and distinct separated occupancies are provided, the health care part of the building shall be separated from other occupancies with 2 hour fire resistance rated barrier construction. Other occupancies shall be separated in accordance with NFPA 5000, Section 6.2.3 and 6.2.4.

2.2.2 Protection of Openings
Opening protection, where required, shall be fire resistance rated based on the rating of the wall assembly having the opening in accordance with NFPA 5000, Table 8.7.2, unless otherwise specified herein. Every opening in a fire barrier shall be protected to limit the spread of fire and restrict the movement of smoke from one side of the fire barrier to the other. The fire resistance rating for opening protectives in 2-hour rated fire barriers, smoke barriers and smoke partitions shall be a minimum of 1-1/2 hours.

2.2.3 Suites
Corridor walls shall be effective in limiting the transfer of smoke and shall be permitted to terminate at the ceiling where the ceiling is constructed to limit the transfer of smoke. The walls shall be 1 hour barrier fire resistance rated in buildings provided with full automatic sprinkler protection.
Sleeping Suites - The size limit on sleeping suites shall not exceed an area of 460 m2.

Exception: The area shall be permitted not to exceed 700 m2 when the following conditions are met:

- Direct visual supervision is provided from a normally attended location within the suite, and,
- The patient sleeping room is provided with a total coverage smoke detection system per NFPA 101 Sections 9.6.2.8 and 18.3.4

Non-Sleeping Suites – The size limit shall not exceed 930 m2.

2.2.3.1 Doors
See section on Exit Corridors – Doors herein.

2.2.3.2 Miscellaneous Openings
In other than smoke compartments containing patient bedrooms, miscellaneous openings, such as mail slots, pharmacy pass-through windows, laboratory pass-through windows, and cashier pass-through windows, shall be permitted to be installed in vision panels or doors without special protection, provided that both of the following criteria are met:

(1) The aggregate area of openings per room does not exceed 80 in.2 (0.05 m2).
(2) The openings are installed at or below half the distance from the floor to the room ceiling.

2.2.3.3 Transfer Grilles
Transfer grilles are not permitted in walls or doors of suites, regardless of whether or not they are protected by fusible link-operated dampers.

Exception: Doors to toilet rooms, bathrooms, shower rooms, sink closets, and similar auxiliary spaces that do not contain flammable or combustible materials shall be permitted to have ventilating louvers or to be undercut.

2.2.4 Exit Access Corridors

2.2.4.1 Walls
Corridor walls shall form a barrier to limit the transfer of smoke and shall be permitted to terminate at the ceiling where the ceiling is constructed to limit the transfer of smoke. The walls shall be 1 hour fire rated provided the building is protected with automatic sprinkler system. The exceptions are as follows:

<u>Exception No. 1:</u> Such spaces may be unlimited in size and open to the corridor where the following are met:

a) The spaces are not used for patient sleeping rooms, treatment rooms, or hazardous areas.
b) The open space is protected by an electrically supervised, automatic smoke detection system, or the entire space is arranged and located to permit direct supervision by the facility staff from a nurses' station or similar space.
c) The corridors onto which the spaces open in the same smoke compartment are protected by an electrically supervised, automatic smoke detection system, or the smoke compartment in which the space located is protected throughout by quick response sprinklers.
d) The space does not obstruct access to required exits.

<u>Exception No. 2</u>: Waiting areas and similar spaces shall be permitted to open to corridors without opening protection provided the following are met:

a) The aggregate waiting area in each smoke compartment does not exceed 55.7 m2.
b) Each area is protected by an electrically supervised, automatic smoke detection system, or each area is arranged and located to permit direct supervision by the facility staff from a nurses' station or similar space; and

c) The area is arranged not to obstruct access to required exits.

Exception No. 3: This requirement shall not apply to spaces for nurses' stations.

Exception No. 4: Gift shops not exceeding 46.45 m2 in area shall be permitted to open to a corridor or lobby without opening protectives, provided the building is protected throughout by an approved automatic sprinkler system.

2.2.4.2 Doors
Corridor doors in fully sprinklered buildings shall be 3/4-hour fire resistance rated with positive latching, and shall be effective in limiting the transfer of smoke. They shall comply with NFPA 101, Section 18.2.2.2. Roller latches shall not be permitted. Door closing devices shall not be required on doors in corridor wall openings other than those serving required exits, smoke barriers, enclosures of vertical openings, and hazardous areas.

2.2.4.3 Glazing
Vision panels consisting of fire rated glazing or wired glass panels in approved frames shall be fire rated in accordance with the provisions for opening protection and shall be smoke-tight. Glazing in fire rated assemblies shall also comply with NFPA 101, Section 8.3.3.

Fire window assemblies shall not be permitted in fire barriers having a fire resistance rating of 2 hours or greater (see NFPA 5000, Table 8.7.2).

2.2.4.4 Elevator Lobbies
Elevator lobbies shall be required on every floor and shall be enclosed by smoke partition walls having a minimum fire resistance rating of 1-hour.

Exception No. 1: Elevator lobbies are not required at the street floor protected with an automatic sprinkler system.

Exception No. 2: Elevator lobbies are not required where elevators are not required to be located in a shaft enclosure.

Exception No. 3: Enclosed elevator lobbies are not required where the elevator hoistway is pressurized.

2.2.4.5 Miscellaneous Openings
In other than smoke compartments containing patient bedrooms, miscellaneous openings, such as mail slots, pharmacy pass-through windows, laboratory pass-through windows, and cashier pass-through windows, shall be permitted to be installed in vision panels or doors without special protection, provided that both of the following criteria are met:

(1) The aggregate area of openings per room does not exceed 80 in.2 (0.05 m2).
(2) The openings are installed at or below half the distance from the floor to the room ceiling.

2.2.4.6 Transfer Grilles
Transfer grilles are not permitted in walls or doors of corridors, regardless of whether or not they are protected by fusible link-operated dampers.

Exception**:** Doors to toilet rooms, bathrooms, shower rooms, sink closets, and similar auxiliary spaces that do not contain flammable or combustible materials shall be permitted to have ventilating louvers or to be undercut.

2.2.5 Smoke Partitions
2.2.5.1 Materials
The walls shall be constructed of materials as permitted by the building construction type.

2.2.5.2 Fire Resistance Rating
Unless otherwise required, smoke partitions shall have a minimum fire resistance rating of 1 hour and shall limit the transfer of smoke.

2.2.5.3 Continuity
Smoke partitions should extend from the floor to the underside of the floor or roof deck above, through any concealed spaces, such as those above suspended ceilings, and through interstitial structural and mechanical spaces. Other alternatives are provided in NFPA 101, Section 8.4.

2.2.5.4 Penetrations and Joints
Penetrations through a smoke partition shall be protected by a system or material that is capable of limiting the transfer of smoke and shall be fire resistance rated per NFPA 5000, Table 8.7.2 based on the rating of the penetrated assembly unless otherwise specified herein.

2.2.5.5 Ducts and Air Transfer Openings
Air-transfer openings in smoke partitions shall be provided with approved combination fire and smoke dampers designed and tested in accordance with the requirements of UL Standards 555 and 555S or ISO equivalent. Dampers shall limit the transfer of smoke and be fire resistance rated based on the rating of the wall assembly having the opening in accordance with NFPA 5000, Table 8.7.2, unless otherwise specified herein. Where the installation of dampers will interfere with the operation of a smoke control system, approved alternative protection shall be utilized.

2.2.5.6 Opening Protectives
Opening protectives for smoke partitions shall comply with NFPA 5000, Section 8.10.3. Doors shall be fire resistance rated based on the rating of the wall assembly having the opening in accordance with NFPA 5000, Table 8.7.2, unless otherwise specified herein. Doors shall limit the transfer of smoke and shall not include transfer grilles. Doors that are normally required to be kept closed shall be automatic-closing or self-closing per NFPA 5000, Section 11.2.1.8.1.

Fire window assemblies, where provided, shall have a minimum fire resistance rating of 20 minutes per Table 8.7.2.

2.2.6 Horizontal Exits
2.2.6.1 Walls
Fire barriers separating building areas between which there are horizontal exits shall have hour fire resistance rating and shall provide a separation that is continuous to ground.
Where a fire barrier provides a horizontal exit in any story of a building, such fire barrier shall not be required on other stories, provided that the following criteria are met:

(1) The stories on which the fire barrier is omitted are separated from the story with the horizontal exit by construction having a fire resistance rating at least equal to that of the horizontal exit fire barrier.
(2) Vertical openings between the story with the horizontal exit and the open fire area story are enclosed with construction having a fire resistance rating at least equal to that of the horizontal exit fire barrier.
(3) All required exits, other than horizontal exits, discharge directly to the outside.

Where walls terminate at exterior walls at an angle of less than 180 degrees, the outside walls shall be 1-hour fire resistance rated with ¾-hour opening protection for a distance of 3.05 m on each side of the intersecting wall.

2.2.6.2 Openings

Every opening in a fire barrier shall be protected to limit the spread of fire and restrict the movement of smoke from one side of the fire barrier to the other. Doors in horizontal exits shall be designed and installed to minimize air leakage in accordance with NFPA 105, Standard for the Installation of Smoke Door Assemblies.

The fire protection rating for opening protectives in horizontal exits (fire barriers), shall be 1-1/2 hours in accordance with Table 8.7.2, NFPA 5000. Fire window assemblies shall not be permitted in wall openings unless as part of the door assembly.

All fire doors in horizontal exits shall be self-closing or automatic-closing and shall have positive latching hardware. An approved vision panel shall be required in each horizontal exit door. Center mullions shall be prohibited.

2.2.7 Exit Passageways

2.2.7.1 Walls

An exit passageway that serves as a discharge from a stair enclosure for more than 3 stories shall have a fire resistance barrier rating of not less than 2-hours.

An exit passageway not serving as a stair discharge or serving stairs connecting 3 stories or less shall have an enclosure fire resistance barrier rating of not less than 1 hour.

2.2.7.2 Openings

The fire resistance ratings of opening protectives shall be as follows:

- 1-1/2-hour for 2-hour exit passageways; and 3/4-hour for 1-hour exit passageways.

Openings in exit passageways shall be limited to only those necessary to provide egress from normally occupied areas and those necessary for egress from passageways.

2.2.7.3 Penetrations

Penetrations into and openings through an exit enclosure assembly shall be prohibited except for the following:

- Electrical conduits serving the enclosure, required exit doors, ductwork and equipment necessary for independent stair pressurization, water and steam piping necessary for the heating or cooling of the exit enclosure, sprinkler piping, standpipes, fire alarm circuits that are protected in accordance with NFPA 101, Section 8.3.5.

Penetrations shall also be prohibited between adjacent exit enclosures.

2.2.8 Smoke Barriers

2.2.8.1 Walls

Smoke barrier walls shall be constructed per NFPA 101, Section 8.5 and shall have a minimum 1- hour fire-resistance rating.

Walls shall form an effective membrane continuous from outside wall to outside wall and from the top of the foundation or floor/ceiling assembly below to the underside of the floor or roof sheathing, deck or slab above, including continuity through concealed spaces, such as those found above suspended ceilings, and interstitial structural and mechanical spaces. The supporting construction should be protected to afford the required fire-resistive rating of the wall or floor supported.

Exception: Smoke barriers are not required in interstitial spaces where such spaces are designed and constructed with ceilings that provide resistance to the passage of fire and smoke equivalent to that provided by smoke barrier walls.
2.2.8.2 Opening Protectives

Smoke barrier doors shall have a minimum 45-minute fire rating. Fire window assemblies shall have a minimum fire resistance rating of 45 minutes per Table 8.7.2, NFPA 5000. Doors shall be automatic-closing or self-closing. Cross-corridor openings in the means of egress shall be protected by a pair of swinging doors or a horizontal sliding door per NFPA 101, Section 18.3.7.7. Corridor openings not in the means of egress shall be permitted to use single leaf doors.

Where, a pair of opposite swinging doors are installed, they shall be without a center mullion. Vision panels shall also be provided, as for horizontal sliding doors and vision panels shall consist of fire-rated glazing materials in approved frames, the area of which should not exceed that tested. The doors shall be close fitting within operational tolerances, and shall not have undercuts, louvers or grilles. The doors shall have head and jamb stops, astragals or rabbets at meeting edges and shall be automatic closing by smoke detection or self-closing. Positive latching devices shall not be required. Air leakage criteria and installation requirements shall be per NFPA 101, Section 8.5.2.

2.3 STRUCTURAL FRAME

The structural frame shall have 3 hour fire resistance rating.

2.4 FLOORS AND FLOOR–CEILINGS

Floor-Ceiling assemblies shall have a minimum 2 hour fire resistance rating.

2.4.1 Openings for Floor-Ceilings

Openings in floors shall comply with the requirements for vertical openings herein. Penetrations shall be protected in accordance with NFPA 5000, Section 8.8.

2.5 ROOFS AND ROOF-CEILINGS

Roof-Ceiling assemblies shall have a minimum 1-½ hour fire resistance rating. Roofing systems shall be permitted to include combustible supports, decking, or roofing in accordance with NFPA 101, Sections 18.1.6.5 and 18.1.6.6.

2.5.1 Openings for Roof-Ceilings
Openings in roof-ceiling assemblies shall be protected identically as openings for floor-ceiling assemblies herein. Skylights shall additionally be permitted per NFPA 5000, Section 8.2.2.3.3.
2.5.2 Roof Covering

The roof covering based on the type of construction specified herein, shall have a minimum classification of Class B per NFPA 5000 Table 38.2.2 and Chapter 38.

2.6 VERTICAL OPENINGS

2.6.1 Protection Requirements

Openings through floors shall be enclosed with 2-hour fire resistance rated barrier walls that shall be continuous from floor to floor, or floor to roof in accordance with NFPA 101, Section 8.6.

Exception No. 1: pneumatic tube conveyors protected in accordance with NFPA 101, 8.3.5.1.

Exception No. 2: atriums as permitted by NFPA 101, 8.6.7.

Exception No. 3: convenience openings protected in accordance with NFPA 101, 8.6.8.

Exception No. 4: escalators and moving walks protected in accordance with NFPA 101, 8.6.8.

Note: Unprotected openings in accordance with NFPA 101, Section 8.6.6, Communicating Space, shall not be permitted.

2.6.2 Shafts.

2.6.2.1 Enclosures

Shaft enclosures shall have minimum 2 hour fire resistance rating.

2.6.2.2 Extent of Enclosures

Shafts that do not extend to the bottom of the building or structure shall:

1. Be enclosed at the lowest or highest level of the shaft with construction of the same fire resistive rating as the lowest floor through which the shaft passes, but not less than the rating of the shaft enclosure, or,
2. Terminate in a room having a use related to the purpose of the shaft. The room shall be separated from the rest of the building by a fire barrier having a fire-resistance rating and opening protection at least equal to the protection required for the shaft enclosure, or,
3. Be protected by approved fire dampers installed in accordance with their listings at the lowest or highest floor level of the shaft, as applicable.

2.6.2.3 Opening Protection
Opening protection (doors) for 2-hour rated enclosures shall have a 1½ hour fire resistance rating and shall be self-closing or automatic - closing and positive latching. Openings shall be limited to only those that are necessary for the purpose of the shaft. Fire window assemblies are not permitted in interior walls of shafts.

2.6.2.4 Stair Penetrations
Penetrations into and openings through an exit enclosure assembly shall be prohibited except for the following:

- Electrical conduits, required exit doors, ductwork and equipment necessary for independent stair pressurization, water and steam piping necessary for the heating or cooling of the exit enclosure, sprinkler piping, standpipes

Penetrations shall also be prohibited between adjacent exit enclosures.

2.6.2.5 Refuse and Laundry Chutes
2.6.2.5.1 Access Rooms
Access openings for refuse and laundry chutes shall be located in rooms or compartments enclosed by a fire barrier that has a fire-resistance rating of not less than 1 hour. Openings into the access rooms shall be protected by opening protectives having a fire protection rating of not less than 3/4 hour. Doors shall be self- or automatic-closing upon the detection of smoke in accordance with IBC Section 715.4.7.3.

2.6.2.5.2 Termination Rooms
Refuse and laundry chutes shall discharge into an enclosed room separated from the remainder of the building by a fire barrier that has a fire-resistance rating of not less than 1 hour. Openings into the termination room shall be protected by opening protectives having a fire protection rating of not less than ¾ hour. Doors shall be self- or automatic closing upon the detection of smoke in accordance with IBC Section 715.4.7.3.

2.7 PENETRATIONS
Penetrations of fire resistance rated or smoke resistant construction shall be protected as follows.

2.7.1 Fire Rated Assemblies
Fire stop systems and devices protecting through-penetrations and membrane-penetrations of fire resistance rated walls and horizontal assemblies shall be protected in accordance with NFPA 101, Section 8.3.5.

Where required per NFPA 5000, Section 8.8.8, fire dampers shall have minimum damper ratings as follows:
- 3 hours for fire resistance rated assemblies of 3 hours or greater
- 1-1/2 hours for fire resistance rated assemblies of less than 3 hours.

Fire dampers shall also comply with NFPA 101, Section 8.3.5 for penetrations.

2.7.2 Smoke Resistant Assemblies
Penetrations passing through smoke barrier or smoke partition assemblies shall be protected by a system or material capable of restricting the transfer of smoke per NFPA 101, Section 8.5.6.

Where a smoke resistant assembly is also constructed to have a fire resistance rating, penetrations shall also comply with the requirements in NFPA 101, Section 8.3.5 for purposes of limiting the spread of fire for a time period equal to the fire resistance rating of the assembly.

Where smoke dampers are provided, they shall be designed and tested in accordance with the requirements of UL 555S, Standard for Smoke Dampers. Where combination fire/smoke dampers are required, they shall be designed and tested in accordance with the requirements of UL 555, Standard for Fire Dampers.

3.0 SPECIAL HAZARDS
3.1 SEPARATION REQUIREMENTS
The following special hazard rooms and spaces shall be separated from the remainder of the building as follows.

3.1.1 Transformer Location
The location of different types of transformers, the required enclosure construction and enclosure fire-rating shall conform to Part B of Article 450 and Section 450-41 of NEC.

3.1.2 Rooms containing combustion engine or gas, turbines, emergency generator room
The enclosing construction of these rooms shall have a minimum 2-hour barrier fire resistance rating.

3.1.3 Boiler and Fuel-fired Heaters
The Boiler and fuel-fired heaters housing / room shall have a minimum 2-hour barrier fire resistance rating where the largest piece of equipment is over 15 psi and 10 HP.

3.1.4 Gift Shops
Gift shops not exceeding 46.45 m2 in area shall be permitted to open onto a corridor or lobby without opening protective's, provided the building is protected throughout by an automatic sprinkler system.

3.1.5 Waste and Linen Rooms
Waste and linen rooms shall have a minimum 2-hour barrier fire resistance rating.

3.1.6. Storage Rooms and Laundries Greater than 9.29 m2
Storage rooms and laundries greater than 9.29 m2 shall have a minimum 2-hour barrier fire resistance rating.

3.1.7 Plant Maintenance Shops
Plant maintenance shops shall have a minimum 2-hour barrier fire resistance rating.

3.1.8 Trash Collection Rooms
Trash collection rooms shall have a minimum 2-hour barrier fire resistance rating.

3.1.9 Laboratories Using Hazardous Materials Considered a Severe Hazard

Laboratories using hazardous materials considered a severe hazard shall have a minimum 2-hour barrier fire resistance rating.

3.1.10 Paint Shops
Paint shops shall have a minimum 2-hour barrier fire resistance rating.

3.1.11 Vocational Shops Not Classified as Group H
Vocational shops not classified as Group H shall have a minimum of 1-hour barrier fire resistance rated construction.

3.1.12 Kitchens
Kitchens shall have a minimum 2-hour barrier fire resistance rating. Separate exhaust ducting for all kitchens/Cafeteria in the building shall be provided to discharge the smoke and hot gases outside the building. Kitchen and cafeteria/ dining shall not be located in basement. They shall be located at Ground, first or second floor.

3.1.13 Boiler Rooms
Provision of boiler and boiler room (if applicable) shall conform to Indian Boiler Act. The boilers shall be installed in a fire resistant room of 2-hours fire rating. Catch pits shall be provided at the low level. The boiler room shall be provided with fresh air inlets and smoke exhausts directly to atmosphere.

3.1.14 Medical Gas Storage Areas
Medical gas storage areas shall have a minimum 2-hour barrier fire resistance rating

3.1.15 Anesthetizing Locations
These storage areas are considered as hazardous and protected in accordance with Annex E of NFPA 99.

3.2 LOCATION OF CRITICAL SERVICES:
All critical services such as Operation theatres, ICU, ICCU etc. shall be located at lower floors in the Ground to 4th floor only

4.0 INTERIOR FINISHES
4.1 WALLS AND CEILINGS
4.1.1 Minimum Flame Spread
The reduction in flame spread classification as indicated below shall be permitted where the building is fully sprinkler protected in accordance with NFPA 13. The occupancy group (Annexure-I) and minimum flame spread classification requirement are given below:

Group I-2 Occupancy (Health care)

a. Exit enclosures and passageways	Class B minimum.
b. Corridors Class B minimum.	Class B minimum
c. Rooms and spaces	Class B minimum

Group A occupancies (Assembly)

d. Exit enclosures and passageways	Class B minimum.
e. Corridors.	Class B minimum
f. Rooms and spaces.	Class C minimum

Group B occupancies (Business)

g. Exit enclosures and passageways	Class B minimum.
h. Corridors.	Class C minimum
i. Rooms and spaces.	Class C minimum

Group S-1 occupancies (Storage)

j. Exit enclosures and passageways	Class C minimum.
k. Corridors	Class C minimum
l. Rooms and spaces.	Class C minimum

4.1.2 Textile Materials Applied to Walls and Ceilings
Class A, only permitted in rooms and areas protected throughout by an approved sprinkler system.
4.1.3 Special Insulation Requirements
Cellular or foamed plastic materials shall not be used as interior wall or ceiling finish unless specifically permitted by NFPA 101, Section 10.2.4.3.1 or 10.2.4.3.2.

5.0 MEANS OF EGRESS
5.1 GENERAL
All components of egress shall be in accordance with NFPA 101, Chapter 7 unless modified herein or by NFPA 101, Section 18.2.

5.1.1 Occupant Load Factors
The occupant load factors (square meter per person) provided in Annexure II shall be used for purposes of determining the required number of exits and exit capacity for rooms, floors, areas, and buildings.

5.1.2 Number of Exits
a. There shall be a minimum of 2 exits per floor and 2 exits from each smoke compartment. Not less than one exit shall be one of the following:

i. Door leading directly outside the building
ii. Stair
iii. Smoke proof enclosure
iv. Ramp
v. Exit passageway

b. Not less than 2 exits shall be provided from each smoke compartment. Egress shall be permitted through an adjacent compartment or compartments, but only if it shall not involve the return through the compartment of fire origin.

c. The general guideline for the number of required exits from various spaces described by functional use is given below

Occupancy	Number of Exits
i) Hospital	Sleeping Rooms or Suites – Two exit access doors shall be required from any patient sleeping rooms or suites over 93 m2. Non-Sleeping Rooms or Suites – Two exit access doors are required for rooms or suites exceeding 230 m2.
ii) Assembly	At least 2 exits required.
iii) Office	At least 2 exits are required in rooms or spaces exceeding an occupant count of 49, or exceeding a common path of travel of 30 m. Other variations may apply per NFPA 101, Section 38.2.4.
iv) Kitchen	At least 2 exits are required in rooms or spaces exceeding an occupant count of 29, or exceeding a common path of travel of 30 m. Other variations may apply per NFPA 101, Section 42.2.4.
v) Mechanical	At least 2 exits are required in rooms or spaces exceeding an occupant count of 29, or exceeding a common path of travel of 30 m. Other variations may apply per NFPA 101, Section 42.2.4.
vi) Outpatient	At least 2 exits required for any room exceeding 232 m2.
vii) Retail	Retail At least 2 exits are required in rooms or spaces exceeding an occupant count of 49, or exceeding a common path of travel of 30 m. Other variations may apply per NFPA 101, Section 36.2.4.

d. A minimum 3 exit staircases shall be provided where the calculated occupant load on a floor is greater than 500 and does not exceed 1,000 persons.

e. Minimum 4 Exit staircases shall be provided where the calculated occupant load on a floor exceeds 1,000 persons.

5.1.3 Means of Egress Height
The minimum means of egress height shall comply with the following requirements.

a. Group I-2 portions 2.4 m.	2.4 m.
b. Elsewhere	
i. General (i.e. corridors, hallways)	2.4 m. Exceptions: Sloped ceilings, Allowable projections, Stair headroom, Door height
ii. Doors	2.03
iii. Stairway headroom	2.03 m, measured vertically above a plane, parallel to and tangent with the most forward projection of the stair tread

5.1.4 Changes in Elevation along Path of Exit Travel
The Changes in elevation along path of exit travel shall meet the following requirements.

a. Less than 0.3 m.	Via sloped surface. Where the slope is greater than 5-percent, ramps complying with Section 1010 shall be required.
b. Less than 0.15 m.	Ramps shall be equipped with either handrails or floor finish materials that contrast with adjacent floor finish materials

5.1.5 Guard Rails
Where the elevation along open sides of a means of egress is more than 760 mm above the adjacent grade level below, guards shall be provided in accordance with NFPA 101, Section 7.2.2.4.

5.1.6 Impediments to Egress
Devices installed to restrict or impede the use of a means of egress under normal conditions shall be designed and installed such that they will provide free and clear access to the means of egress under emergency conditions unless otherwise specified in the special locking arrangement provisions of 7.2.1.6 and Chapter 18 of NFPA 101.

5.1.7 Obstructions to Egress
Means of egress shall be maintained free of all obstructions or impediments at all times in the case of fire or other emergency.

5.2 ARRANGEMENT AND EXIT ACCESS
The exit access i.e. the portion of aggress system that leads from any occupied portion of a building or structure to an exit shall comply with the following requirements.

5.2.1 Corridor Access

a. Every habitable room shall have an exit access door leading directly to an exit access corridor unless otherwise specified herein and NFPA 101, Section 18.2.5.5.1.

   Exception: Rooms with exit doors opening directly to the outside at ground level per NFPA 101, Section 18.2.5.5.3

b. Sleeping suites and non-sleeping suites shall have a minimum of one means of egress be directly to a corridor. Where suites are required to have two means of egress, the second one shall be permitted through another suite, provided that the separation between the suites complies with the corridor separation requirements herein (NFPA 101, Sections 18.3.6.2 through 18.3.6.5.

5.2.2 Remoteness of Exits or Exit Access Doorways

When two means of egress are required, exits or exit access doorways shall be separated by a minimum of one-third the maximum diagonal of a space or building in a sprinklered building.
When three or more means of egress are required, two exits or exit access doorways shall meet the requirements above and the additional exits shall be arranged a reasonable distance apart, so that if one becomes blocked the others will remain available.

5.2.3 Maximum Allowable Exit Access Travel Distances

The maximum travel distance of 45.0 meters is only allowed according to clause 4.5 Table (22) Part (4) of NBC, 2005

a.	Sleeping Rooms – From any point in a health care sleeping room and an exit access door	15.24 m
b.	Sleeping Suites – From any point in a health care sleeping suite to an exit access door	30.48 m. without having to pass through more than one intervening room
c.	Non-Sleeping Suites – From any point in a health care non-sleeping suite to an exit access door	30.48 m where the suite is arranged with one intervening room 15.24 m where the suite is arranged with two intervening rooms
d.	From any room door required as an exit access door to a required exit	Within healthcare areas 45 m.
e.	From any point within a room to an exit	
f.	Group I-2 occupancy (includes Child Care)	45m
g.	Laboratories classified as Group H Occupancies	22.86 m. (H-1), 30.48 m. (H-2), 45 m. (H-3), 45 m (H-4) and 45 m. (H-5). (Classification as per IBC 2006 Section 307)
h.	Health Care	45 m.
i.	Business	45 m.
j.	Assembly	45 m. when protected throughout by an approved, supervised automatic sprinkler system.
k.	Storage	45 m
l.	Outpatient	45 m
m.	Common Path of Travel	
n.	Business	22.86 m
o.	Assembly	Permitted the first 6.10 m. from any point where serving any number of occupants and for the first 22.86 m. from any point where serving not more than 50 occupants.
p.	Storage	30.48

5.2.4 Travel through Intervening Rooms

Exiting from any portion of the building shall be directly to an exit or a corridor.

<u>Exceptions</u>:

a. Access to exits shall be permitted to occur through foyers, lobbies and reception rooms when constructed as required for corridors (IBC 1017.5)..
b. Access from rooms or spaces shall be permitted to be through adjoining or intervening rooms, provided that such adjoining rooms are accessory to the areas served and are of less or equal hazard, or as permitted herein for Suites in the section on Maximum Allowable Travel Distances.
c. Patient sleeping rooms shall be permitted to have one intervening room if the intervening room is not used as an exit access for more than eight patient beds.
d. Special nursing suites shall be permitted to have one intervening room where the arrangement allows for direct and constant visual supervision by nursing personnel.
e. For rooms other than patient sleeping rooms located within a suite, exit access travel from within the suite shall be permitted through one intervening room where the travel distance to the exit access door is not greater than 30.48 m.
f. For rooms other than patient sleeping rooms located within a suite, exit access travel from within the suite shall be permitted through two intervening rooms where the travel distance to the exit access door is not greater than 15.24 m.

5.2.5 Exit Access Components
Corridors

i.	Width	
	1. In patient areas for bed movement	Minimum of 2.44 m
	2. Other than patient area	Minimum of 1.12 m
	3. Reduction in width	Doors in fully opened position and handrails must not reduce the required width by less than 0.18 m. Doors in any position must not reduce width by more than one-half. Projections into the clear width shall not exceed 0.11 m at or below the handrail height.
ii.	Dead Ends	Maximum of 9.14 m
iii.	Separation Requirements	See 2.2.3 Suites, and 2.2.4 Exit Corridors herein.
		Doors compliant with NFPA 101, Section 7.2.1 shall be permitted
i.	Clear width - minimum	
	Serving I-2 portions used for movement of beds	2.0 m
	Other doors	1.2 m.
ii.	Width - maximum	2.0 m. max door leaf.
	1. Means of egress	Swing in the direction of exit travel when serving an occupant load of 50 or more.
	2. Roller latched doors	Not permitted.
iii.	In smoke barrier cross-corridor openings in the means of egress	45-minute fire resistance rated, smoke- and draft control doors shall be opposite swinging when installed across corridors with egress in both directions. Additionally these doors shall comply with the following:
		Have no center mullion.
		Have vision panels.
		Be closefitting and should be without undercuts, louvers or grilles.
		Have stops at the heads and jambs, and rabbet and astragals at the meeting edges.
		Be automatic closing by smoke detection.
		Positive latching devices are not required.
iv.	Other special doors	Special doors, such as revolving doors or sliding doors, may be used as egress doors per NFPA 101, Section 18.2.2.2.9.
v.	Panic hardware	Each door in a means of egress from a Group A having an occupant load of 50 or more and any Group H occupancy should not be provided with a latch or lock unless it is panic hardware or fire exit hardware.
vi.	Locking	Patient sleeping room doors shall not be permitted to be locked except as permitted by NFPA 101, Section 18.2.2.2.2.
		Doors within the required means of egress shall not be equipped with a latch or lock requiring a tool or key from the egress side except as permitted by NFPA 101, Section 18.2.2.2.4.
		Doors within the required means of egress that are permitted by exception to be locked shall have provisions made for the rapid unlocking of the locks or locking devices per NFPA 101, Section 18.2.2.2.5.
		Doors in an exit passageway, stairway enclosure, horizontal exit, smoke barrier, or hazardous area enclosure (except boiler rooms, heater rooms, and mechanical equipment rooms) shall be permitted to be held open only by an automatic release device that complies with NFPA 101, 7.2.1.8.2. The doors shall release upon an alarm signal from the fire alarm system.
		Where egress doors are used in pairs, approved automatic flush bolts may be used, provided that the door leaf having the automatic flush bolts has no doorknob from the inside or surface-mounted hardware. (IBC 1008.1.8.3)
		Manually operated flush bolts or surface bolts are only allowed where a pair of doors serves a storage or equipment room. In these cases, the manually operated edge- or surface-mounted bolts are permitted on the inactive leaf. (IBC 1008.1.8.3)

5.3 THE EXIT
Permissible exits shall be as follows:

Doors leading directly to the outside of the building.
Stairs
Smoke proof Enclosures.
Ramps
Exit Passageways.
Horizontal Exits.

5.3.1 Exit Width and Capacity
For exit stairways, a factor of 7.6 mm per occupant shall be applied. For other exit components, a factor of 5.0 mm per occupant shall be applied.

5.3.2 Stairs
Stairs shall comply with NFPA 101, Section 7.2.2 unless otherwise modified herein.

a.	Stair width	Minimum stair width shall be 2.0 m. clear width.
b.	Permissible projections	Shall not exceed 0.11 m. at or below the handrail height. Not limited above the headroom height required.
c.	Steps	
	Riser height	Minimum of 0.1 m; Maximum of 0.18 m
	Minimum tread	Minimum of 0.28 m
d.	Stair landing	Dimension in the direction of travel equal to the stair width
e.	Handrails	Required on both sides.
	Continuity	Shall be continuous, without interruption by newel posts or other obstructions for the full length of each flight of stairs.
	Height	Handrails shall be not less than 865 mm, and not more than 965 mm above the surface of the tread, measured vertically to the top of the rail from the leading edge of the tread.
f.	Roof access	In building four or more stories in height, one stair shall provide access to the roof.
g.	Stairway identification	Shall be provided per NFPA 101, Section 7.3.3.5.4.
h.	Variation of riser height	The variation of riser height for a flight of stairs shall not exceed 9.5 mm.
i.	Distance between landings	The vertical distances between landings as measured between the horizontal planes of adjacent landings shall not exceed 3.66 m.
j.	Exterior exit stairways	Not permitted as a required means of egress per IBC 1023.2 for Group I-2 occupancies or for any occupancies in high-rise buildings.
k.	Enclosures	Stair enclosures shall have minimum 2 hour barrier fire resistance rating. See Section 2.6.2 on Shafts herein.
l.	Openings	See protection of openings in Section 2.6.2.3 herein.
m.	Stairway marking	Stairway marking shall be in accordance with NFPA 101, Section 7.2.2.5.4.
n.	Stairway door locking	Stairway doors other than the exit discharge doors shall be permitted to be locked from stairway side. Stairway doors that are locked from the stairway side shall be capable of being unlocked simultaneously without unlatching upon a signal from the fire command center
o.	Stairway re-entry access	Re-entry access for health care occupancies shall be provided per NFPA 101 Section 7.2.1.5.7.

5.3.3 Smoke proof Exit Enclosures
Smoke proof enclosures shall comply with NFPA 101, Section 7.2.3 unless otherwise modified herein. Every required stairway serving floors more than 22.86 m. above the lowest level of fire department vehicle access shall comply with the provisions for smoke proof enclosures In accordance with NFPA 101: 7.2.3.

5.3.3.1 Enclosure
A smoke proof enclosure shall be enclosed from the highest point to the lowest point and shall be separated from the remainder of the building by not less than 2-hour fire barriers. Access to the stairway shall be by way of a vestibule. The vestibule shall be within the 2-hour rated enclosure and shall be considered part of the smoke proof enclosure. The smoke proof enclosure shall be without openings other than the required means of egress doors. Exception: When a stair pressurization system is used, a stair entrance vestibule is not required.

5.3.3.2 Vestibule
Access to the stairway shall be by way of a vestibule. The vestibule shall be within the 2-hour rated enclosure and shall be considered part of the smoke proof enclosure. The door opening into the vestibule shall be protected with an approved fire door assembly having a minimum 1 ½-hour fire protection rating. The door from the vestibule into the stairway shall have a minimum 20-minute fire protection rating. Doors shall be self-closing or shall be automatic-closing by actuation of a smoke detector located
within 3.05 m of the vestibule entrance door.

5.3.3.3 Discharge
Every smoke proof enclosure shall discharge into a public way, into a yard or court having direct access to a public way, or into an exit passageway. Such exit passageways shall be without openings, other than the entrance to the smoke proof enclosure and the door opening to the outside yard, court, or public way. The exit passageway shall be separated from the remainder of the building by a 2-hour fire resistance rating.

5.3.3.4 Stair Pressurization Alternative
When a stair pressurization system is used, a stair entrance vestibule is not required. Smoke proof enclosures using stair pressurization shall use an approved engineered system with a design pressure difference across the barrier of not less than 12.5 N/m2, and shall be capable of maintaining these pressure differences under likely conditions of stack effect or wind. The pressure difference across doors shall not exceed that which allows the door to begin to be opened by a force of 133 N.

5.3.3.5 System Activation
The activation of the stair pressurization system shall be initiated by smoke detectors installed at each floor level in an approved location within 3.05 m. of the entrance to the smoke proof enclosure. When the closing device for the stair shaft is activated by smoke detection or power failure, the mechanical equipment shall activate and operate at the required performance levels. The required mechanical systems shall operate upon the activation of the smoke

detectors specified above and by manual controls accessible to the fire department. The required system shall also be initiated by the following, if provided:

1. Water flow signal from a complete automatic sprinkler system
2. General evacuation alarm signal

5.3.4 Ramps
Ramp (a) from Ground floor to the critical areas (b) from terrace to the refuge floor shall be provided.

The open external ramp with fire doors on each floor in the mandatory side and rear open space may also be considered after leaving clear 7.0 meters driveway.

5.3.5 Exit Passageways
- Exit passageways shall comply with NFPA 101, Section 7.2.6 unless otherwise modified herein.
- Separation of exit passageways from the rest of the building shall be by construction having a minimum barrier fire resistance rating of not less than 2-hours.
  Exception: Where the exit connects three stories or less, the separation shall have a barrier fire resistance rating of not less than 1-hour.
- Fire windows shall be permitted in openings per NFPA 101, Section 7.2.6.2.
- Exit passageways that discharge from stair enclosures shall have fire resistance ratings and protection of openings not less than those required of the stair enclosure (also see Section 2.2.7 herein).
- The width of an exit passageway shall be adequate to accommodate the aggregate required capacity of all exits that discharge through it.
  Exception: the capacity shall not be required to be aggregated where an exit passageway additionally serves occupants on the level of exit discharge.
- The floor of an exit passageway shall be solid and without perforations.

5.3.6 Horizontal Exits
Horizontal exits shall comply with NFPA 101, Section 7.2.4 unless otherwise modified herein or by NFPA 101, Section 18.2.2.5.

Accumulation space shall be provided on each side of the horizontal exit as follows:
- Not less than 2.8 (net) sq m per patient in a hospital or nursing home, or not less than 1.4 (net) sq m per resident in a limited care facility, shall be provided within the aggregated area consisting of corridors, patient rooms, treatment rooms, lounge or dining areas, and other similar areas
- On stories not housing bed or litter borne patients, not less than 0.56 (net) sq m per occupant shall be provided for the total number of occupants in adjoining compartments.

Horizontal exits shall be permitted for substitution of other exits to the extent that the total exit capacity shall not be reduced by more than 1/3 for healthcare or more than 50 percent for other occupancies

A single door shall be permitted across a corridor of a horizontal exit if all of the following conditions are met:

- The exit serves one direction only.
- Such door is a swinging door or a horizontal-sliding door complying with 7.2.1.14.
- The door is not less than 41⁄2 in. (1055 mm) in clear width.

Horizontal exits serving as a means of egress from both sides shall be permitted to be protected by a pair of swinging doors that swing in opposite directions from each other and each having a clear width as follows:

- Not less than 1055 mm for corridor widths of 2440 mm or greater, and,
- Not less than 810 mm for corridor widths of 1830 mm but less than 2440 mm..

Exception: Openings shall be permitted to be protected by horizontal sliding doors complying with NFPA 101 Section 7.2.1.14 that provide clear widths as follows:

- Not less than 2110 mm for corridor widths of 2440 mm or greater, and,
- Not less than 1625 mm for corridor widths of 1830 mm but less than 2440 mm

5.4 THE EXIT DISCHARGE
Exit discharge shall comply with NFPA 101, Section 7.7 unless otherwise modified herein.

5.4.1 Termination
Exits shall be permitted to terminate at the following:

- directly at a public way, exterior exit discharge, yard, court, open space, or other portions of the exit discharge that are of adequate width and size to provide occupants with a safe and unobstructed access to a public way,
- to an interior exit discharge in accordance with NFPA 101, Section 7.7.2,
- to a rooftop exit discharge in accordance with NFPA 101, Section 7.7.6, or,
- to a vestibule or foyer in accordance with NFPA 101, Section 7.7.2.5

5.4.2 Discharge inside of a building through the level of exit discharge
Not more than 50 percent of the required number of exits, and not more than 50 percent of the required egress capacity shall discharge through areas on the level of exit discharge. The discharge shall lead to a free and unobstructed way to the exterior of the building, and such way shall be readily visible and identifiable from the point of discharge from the exit.
The area on the level of discharge shall be separated from areas below by construction having a fire resistance rating not less than that required for the exit enclosure.

Exception: The separation shall not be required where the levels below are part of anatrium with the level of discharge and the atrium is protected in accordance with NFP Section 8.6.7.

5.4.3 Marking of Exit Discharge
Stairs shall be arranged and the exit discharge marked to make clear the direction of egress to a public way. Stairs that continue more than one-half story beyond the level of exit discharge shall be interrupted at the level of exit discharge by partitions, doors, or other effective means.

5.4.4 Exit Courts
The width shall not be less than 1.12 m. The required width shall be unobstructed to a minimum height of 2.13 m. An exit court serving an occupant load of 10 or more and less than 3.05 m. in width shall have court walls of 1-hour fire-resistive construction for a distance 3.05 m. above the floor of the court and openings protected by fixed or self closing assemblies having a 3/4 –hour fire-protection rating.

5.5 ACCESSIBLE MEANS OF EGRESS
Accessible means of egress shall comply with the IBC as follows:

1.	Where Required	Accessible spaces shall be provided with not less than one accessible means of egress. Where more than one means of egress is required from any accessible space, each accessible portion of the space shall be served by accessible means of egress in at least the same number as the minimum required number of exits. In addition, the means of egress which provides access to or egress from, buildings for persons with disabilities, shall also comply with the requirements.
	Exceptions:	1. Not required in alterations to existing buildings.
		2. One accessible means of egress is required from an accessible mezzanine.
2.	Continuity and components	Shall be continuous to a public way and shall consist of one or more of the following components:
		1. Accessible routes.
		2. Stairways with vertical exit enclosures.
		3. Exterior exit stairways (not permitted in a Group I-2 occupancy).
		4. Elevators.
		5. Platform lifts.
		6. Horizontal exits.
		7. Ramps (exterior ramps not permitted for hospitals or high-rise buildings).
		8. Areas of refuge.
	Exceptions:	1. Where the exit discharge is not accessible, an exterior area of assisted rescue shall be provided.
		2. Where the exit stairway is open to the exterior, the accessible means of egress shall include either an area of refuge or an exterior area for assisted rescue.
3.	Elevators	One accessible means of egress shall be provided by an elevator in buildings where a required accessible floor is four or more stories above or below a level of exit discharge. In order to be considered part of an accessible means of egress, an elevator shall comply with the emergency operational and signaling device requirements of Section 2.227 of ASME A17.1. Standby power shall be provided and the elevator shall be accessed from either an area of refuge or a horizontal exit.
4.	Exit Stairways	In order to be considered part of an accessible means of egress, an exit stairway shall have a clear width of not less than 1.22m between handrails and shall either incorporate an area of refuge within an enlarged floor-level landing or shall be accessed from either an area of refuge or a horizontal exit.
5.	Platform Lifts	Shall not be part of an accessible means of egress except where allowed as part of a required accessible route in IBC Section 1109.7. Standby power shall be provided and the lift should not be enclosed.
6.	Areas of Refuge	Shall be accessible from the space it serves by an accessible means of egress. Every required area of refuge shall have direct access to an enclosed stairway or an elevator. Where an elevator lobby is used as an area of refuge, the shaft and lobby shall be a smoke proof enclosure except where the elevators are in an area of refuge formed by a horizontal exit or smoke barrier.
a.	Size	Sized to accommodate a wheelchair space of not less than 30 inches by 48 inches for each 200 occupants or portion thereof, based on the occupant load of the area of refuge and areas served by the area of refuge. The wheelchair space shall not reduce the required means of egress width. Access to any of the required wheelchair spaces in an area of refuge shall not be obstructed by more than one adjoining wheelchair space.
b.	Separation	Each area of refuge shall be separated from the remainder of the story by a smoke barrier or a horizontal exit except those located within vertical exit enclosures.
c.	Two-way communication	Shall be provided between area of refuge and the central control point. If the central control point is not constantly attended, the area of refuge shall have access to a public telephone system. The two-way communication system shall include both audible and visible signals.

d.	Instructions	Shall be posted adjoining the two-way communication system.
e.	Identification	Each door providing access to an area of refuge shall be provided with a sign stating "Area of Refuge" and the International Symbol of Accessibility.
7.		At exits and elevators serving as a required accessible space but not providing an approved accessible means of egress, signage shall be installed indicating the location of accessible means of egress.
8	Exterior area for Assisted Rescue	Shall be open to the outside air and meet the requirements of IBC Section 1007.6.1. Separation walls shall comply with the requirements for exterior walls. Where walls or openings between the area for assisted rescue and the interior of the building, the building exterior walls within 3.048 m. horizontally of a non-rated wall or unprotected opening should have a fire-resistance rating of not less than 1 hour. Openings within such exterior walls should be protected by opening protective having a fire protection rating of not less than ¾ hour. This construction should extend vertically from the ground to a point 3.048 m. above the floor level of the area for assisted rescue or to the roof line, whichever is lower.
a.	Openness	Shall be at least 50 percent open.
b.	Exterior exit stairway	Not permitted in a Group I-2 occupancy.
c.	Identification	Shall be provided.

6.0 EMERGENCY SYSTEM REQUIREMENTS

6.1 MEANS OF EGRESS IDENTIFICATION

Signs shall comply with NFPA 101, Section 7.10 unless otherwise modified herein.

a. **Required Locations:** Exits and exit access doors shall be marked by an approved exit sign readily visible from any direction of egress travel. Access to exits shall be marked by readily visible exit signs in cases where the exit or the path of egress travel is not immediately visible to the occupants. Exit sign placement shall be such that no point in a corridor is more than 30.48 m. or the listed viewing distance for the sign, whichever is less, from the nearest visible exit sign.

Exceptions:

1. Exit signs are not required in rooms or areas that require only one means of egress.

2. Main exterior exit doors or gates that are obviously and clearly identifiable as exits need not have exit signs where approved by the Authority Having Jurisdiction.

b. **Power Requirements**: Exit signs shall be illuminated at all times. To ensure continued illumination for duration of not less than 90 minutes in case of primary power loss, the sign illumination means shall be connected to an emergency power system provided from storage batteries, unit equipment or an on-site generator.
Illumination of exit sign and directional signs shall be supplied by life safety branch of the electrical system as described in NFPA 99, Standard for Health Care Facilities.

6.2 MEANS OF EGRESS ILLUMINATION (NFPA 101, 7.8)

a. **Lighting Requirements**: Means of egress illumination shall be a minimum of 10.8 lux at the floor level throughout the means of egress (including the exit discharge) at all times the building is occupied.

b. **Power Requirements**: Means of egress illumination shall be on emergency power supplied by life safety branch of the electrical system as described in NFPA 99, Standard for Health Care Facilities.

The power supply shall normally be provided by the premises' electrical supply. In the event of power failure, an emergency electrical system shall automatically illuminate the following areas:

i. Aisles and unenclosed stairways in rooms requiring two or more means of egress.
ii. Corridors, exit enclosures, and exit passageways in buildings required to have two or more exits.
iii. Interior exit discharge elements in buildings required to have two or more exits.

6.3 EMERGENCY POWER SYSTEMS

An emergency power system complying with IBC Section 2702 shall be provided for the following emergency power loads:
Exit signs and means of egress illumination
Elevator car lighting
Emergency voice/alarm communications systems
Automatic fire detection systems
Fire alarm and monitoring systems
Power and lighting for the fire command center
Electrically powered fire pumps
Ventilation and automatic fire detection equipment for smoke proof enclosures
Not less than one elevator serving all floors, with standby power transferable to any elevator
Mechanical equipment for smoke control systems.
Horizontal sliding doors
Standby generators shall be located in a room having a minimum 2 hour fire resistance-rated separation from the remainder of the building.

6.4 EMERGENCY AND STANDBY POWER BRANCH CIRCUITS

Emergency and standby power shall be provided in accordance with NFPA 99: 4.4.2.2.2 and shall be supplied by an on-site generator.

i) Life Safety Branch
- Illumination of means of egress.
- Exit signs and exit directional signs.
- Fire alarm systems.
- Alarms required for systems used for the piping of non-flammable medical gases.

- Hospital communication systems when used for emergency instructions.
- Emergency generator room lighting and selected receptacles.
- Elevator cab lighting, control, communication, and signal systems.
- Automatically operated doors used for building egress.
- Lighting in rooms where life-support systems are in use.

ii) Critical Branch
- Critical care areas that use anesthetizing gases, task illumination, selected receptacles, and fixed equipment.
- Isolated power systems in special environments.
- Task illumination and selected receptacles in the following:
  1. Patient care areas including infant nurseries, selected acute nursing areas, psychiatric bed areas, and ward treatment rooms.
  2. Medication preparation areas.
  3. Pharmacy dispensing areas.
  4. Nurses' stations.
- Additional specialized patient care task illumination and receptacles where required.
- Nurse call systems.
- Blood, bone, and tissue banks.
- Telephone equipment rooms and closets.
- Task illumination, select receptacle and selected power circuits for:
  1. General care beds (at least one duplex receptacle per patient bedroom).
  2. Angiographic labs.
  3. Cardiac catheterization labs.
  4. Coronary care units.
  5. Hemodialysis rooms or areas.
  6. Emergency room treatment areas (selected).
  7. Human physiology labs.
  8. Intensive care units.
  9. Post-operative recovery rooms (selected).
- Additional task illumination, receptacles, and selected power circuits needed for effective facility operation. Single-phase fractional horsepower exhaust fan motors that are interlocked with three-phase motors on the equipment system shall be permitted to be connected to the critical branch.

a) **Source**: On-site generator.
b) **Transfer Time:** For life safety and critical branch 10 seconds or UPS where required.
c) **Fuel Supply**: An on-premises fuel supply sufficient not less than 2 hours full demand operation of the system shall be provided.

7.0 ELEVATORS

Minimum Dimensions: Elevators shall be sized in accordance with requirements of
ANSI / ASME A17.1, unless otherwise modified herein. Elevators shall be sized to accommodate a 4-bed minimum to provide for bed / stretcher coupled with life saving equipments.

a) **Elevator Operation and Installation**: Elevators shall comply with ANSI / ASME A17.1.
b) **Fire Emergency Controls**: Elevators shall be provided with Phase I emergency recall operation and Phase II emergency in-car operation in accordance with ANSI / ASME A17.1.
c) **Hoistway Venting:**
  i. **Required Locations**: For elevator shafts extending through more than three stories.
  ii. **Vent Area**: Not less than 3.5 percent of the area of the hoistway nor less than 0.28 m2 for each elevator car, and not less than 3.5 percent nor less than 0.047 m2 for each dumbwaiter car in the hoist way, whichever is greater.

  iii. **Vent Configuration**: Of the total required vent area not less than one-third shall be permanently open. Closed portions of the required vent area shall consist of openings glazed with annealed glass not greater than 3.2 mm. in thickness.
  iv. **Equipment Venting:** When solid-state equipment is used to operate the elevators the elevator equipment room shall be provided with an independent ventilator or air conditioning system to prevent overheating:

8.0 FIRE PROTECTION SYSTEMS

8.1 AUTOMATIC SPRINKLER SYSTEM

The building shall be fully sprinkle red and supervised in accordance with NFPA 13, and modified herein.
A secondary water supply equal to the hydraulically calculated sprinkler demand, including the hose stream requirement, shall be provided for high-rise buildings in Seismic Design category C, D, E or F as determined by the IBC. The secondary water supply shall have a duration of not less than 30 minutes as determined by the occupancy hazard classification in accordance with NFPA 13.
A Class I standpipe system shall be provided.
Listed quick-response or listed residential sprinklers shall be used throughout smoke compartments containing patient sleeping rooms.

8.2 PORTABLE EXTINGUISHERS

a) Portable extinguishers shall be provided at each compartment / floor of the building in accordance with the more stringent requirements of IS 2190 and NFPA 10.
b) Mist equipment i.e., 9 liters (2 nos) per floor and 600 liters Mist (Trolley mounted) with 60.00meters hose in Fire Control Room shall be provided.

8.3 HOSE REELS

One First Aid hose reel shall be provided for every 1000 sq.m. Floor area, located in the vicinity of an exit staircase.

8.4 YARD HYDRANTS AND WET STANDPIPES
Yard hydrants and wet standpipe connections shall be provided per NFPA Standards unless otherwise modified herein. The most stringent of the requirements shall apply. Requirements are as follows:
Wet standpipes shall be provided for every 1000 sq. m of floor area with a minimum of the greater of 2 per floor, or one for each exit staircase. Yard hydrants shall be provided around the perimeter of the building at a distance of every 45 m.

8.5 FIRE PUMPS
Fire pumps and jockey pumps shall be designed and installed per NFPA 20 based on the hydraulic demands of the fire protection systems provided.

8.6 WATER SUPPLY TANKS
Terrace tank with a minimum capacity of 100,000 Liters shall be installed to provide an adequate water supply for fire protection systems.

An underground water tank with a minimum capacity of 4.00 lakhs Liters shall be provided for firefighting purposes.

9.0 FIRE DETECTION AND ALARM SYSTEMS
Health care occupancies (per NFPA 101, Section 18.3.4) shall be provided with fire alarm and detection systems. They shall be Designed and installed per the more stringent of IS 2189 and NFPA unless as modified herein.

9.1 ALARM INITIATING DEVICES
Initiation of the required fire alarm systems shall be by manual means and by means of any required detection devices, detection systems, or sprinkler system water flow alarms. When activated, alarm initiating devices shall activate audible and visible alarm signals. The general evacuation alarm signal shall operate throughout the entire building.

Operation of any control initiating device in the fire alarm system shall automatically accomplish the fire safety control function(s) for which the device is designed.

9.1.1 Manual Fire Alarm Stations
Manual call points (Pull stations) shall be provided in the natural path of escape near every exit door at each floor including basements. The travel distance to a Manual call point shall not be more than 60.96 m.

Manual pull stations may alternatively be located at nurses' stations in patient sleeping areas in lieu of required exits provided they are visible and continuously accessible, and do not exceed 60.96 m. travel distance.

9.1.2 Smoke Detectors
- Duct smoke detectors shall be provided in air supply systems over 0.94 m3/s, located in the main return air and exhaust air plenums.
- Duct smoke detectors shall be provided in return air systems serving more than 1 story and 7.08 m3/s, located at each connection to a vertical duct or riser.
- Smoke detectors shall be provided in spaces open to corridors unless they are directly supervised from the nurse’s station. This includes waiting and similar spaces open to the corridor.
- Smoke detectors shall be provided in elevator lobbies and machine rooms to recall elevators.
- Smoke detector shall be provided at each smoke damper for damper activation.
- Smoke detectors shall be provided at hold-open doors, located on each side of the doors.
- Smoke detectors, which receive primary power from the building wiring, shall be provided in the patient sleeping rooms with visual display in corridor outside room and at the nurses’ station.
- In each mechanical equipment, electrical, transformer, telephone equipment or similar room which is not provided with sprinkler protection, elevator machine rooms and in elevator lobbies.
- Corridor smoke detection is not required in smoke compartments containing patient sleeping units where patient sleeping units are provided with smoke detectors that comply with UL268. Such detectors shall provide a visual display on the corridor side of each patient sleeping unit and an audible and visual alarm at the nursing station attending each unit.
- Corridor smoke detection is not required in smoke compartments containing patient sleeping units, where patient sleeping units are equipped with automatic door –closing devices with integral smoke detectors on the unit sides installed in accordance with their listing, provided that the integral detectors perform the required alerting function.

9.1.3 Sprinkler System Water Flow Devices
A supervised control valve tamper switch and water flow detection device shall be provided at the lateral connection to the sprinkler system on each floor.
All valves controlling the water supply for automatic sprinkler systems, pumps, water levels and temperatures, critical air pressures and water-flow switches on all sprinkler systems shall be electrically supervised.

Exceptions:
1. Jockey pump control valves that are sealed or locked in the open position.
2. Control valves to commercial kitchen hoods, paint spray booths or dip tanks that are sealed or locked in the open position.
3. Valves controlling the fuel supply to fire pump engines that are sealed or locked in the open position.

9.2 ALARM INITIATION
Where an alarm notification system is required, it shall be activated by the following devices sending signals to the fire alarm system:
- Automatic detection devices.
- Sprinkler water-flow devices and other extinguishing system operation Manual fire alarm boxes.

9.3 ALARM ANNUNCIATION AND ZONING
Alarm annunciation and zoning shall be per NFPA 101, Section 9.6.7 unless modified s follows.
Alarm zones shall be permitted to coincide with the areas of compliant smoke compartments.

9.4 OCCUPANT NOTIFICATION
Audible and visual alarms shall be provided in all non-patient areas and shall be listed for their purpose.
Automatic occupant notification of alarm shall be provided in accordance with NFPA 101, Section 9.6.3.with the following exceptions:

Exceptions:
- Smoke detectors located at doors for the exclusive operation of automatic door release shall be required to activate the building evacuation alarm, provided that the power supply and installation wiring to the detectors are monitored by the building fire alarm system, and the activation of the detectors initiates a supervisory signal at a constantly attended location.
- Visual alarms shall be permitted to replace audible alarms for critical-care areas of Group I-2occupancies.

9.5 FIRE SERVICES NOTIFICATION
Notification of the fire services shall be in accordance with NFPA 101 Section 9.6.4.

10.0 EMERGENCY VOICE ALARM COMMUNICATION SYSTEMS
10.1 EMERGENCY VOICE/ALARM SYSTEM
An emergency voice/alarm communication system shall be required.
The operation of any automatic fire detection, sprinkler water-flow device or manual fire alarm box shall automatically sound an alert tone followed by voice instructions giving approved information on a minimum of the alarming floor, the floor above and the floor below in accordance with Section 404 of the International Fire Code. Speakers shall be provided throughout the building by paging zones. As a minimum, paging zones shall be provided as follows:

1. Elevator groups
2. Exit stairways
3. Each floor
4. Areas of refuge as defined in IBC Section 1002.1

In Group I-2 occupancies, the alarm shall sound in a constantly attended area and a general occupant notification should be broadcast over the overhead page.

10.1.1 Manual Override
A manual override for emergency voice communication shall be provided on a selective and all-call basis for all paging zones.

10.1.2 Live Voice Messages
The emergency voice/alarm communication system shall also have the capability to broadcast live voice messages through paging zones on a selective and all-call basis.

10.1.3 Design and Installation
The emergency voice/alarm communication system shall be designed and installed in accordance with NFPA 72.

10.2 FIRE DEPARTMENT COMMUNICATIONS SYSTEM
An approved two-way fire department communications system shall be provided for fire department use and shall be designed and installed in accordance with NFPA 72. It shall operate between a fire command centre and elevators (lifts), elevator lobbies (lift landings), emergency and standby power rooms, fire pump rooms, areas of refuge, and inside enclosed exit stairways. The main control unit shall be located in the fire command centre. Fire department communication devices / telephones shall be provided at the following areas:

- Stairway landings at each floor level within enclosed stairways
- Lifts and lift landings
- Refuge areas
- All critical service areas such as Operation theatres, ICU, ICCU etc.

Fire department radio systems shall be permitted to be provided where approved by the fire department.

10.3 FIRE COMMAND CENTER
A fire command center shall be provided. The location and accessibility shall be approved by the fire department. The fire command center shall be separated from the remainder of the building by not less than 1-hour fire barrier or horizontal assembly, or both. The room shall be a minimum of 9 m2 with a minimum dimension of 2.44 m. A layout of the fire command center and all features required shall be submitted for approval prior to installation. The fire command center shall comply with NFPA 72 and contain the following features:

1. The emergency voice/alarm communication system unit
2. The fire department communications unit
3. Fire detection and alarm system annunciator unit
4. Annunciator unit visually indicating the location of the elevators and whether they are operational
5. Status indicators and controls for air-handling systems.
6. The fire-fighter's control panel required for smoke-control systems.
7. Controls for unlocking stairway doors simultaneously.
8. Sprinkler valve and water-flow detector display panels.
9. Emergency and standby power status indicators.
10. A telephone for fire department use with controlled access to the public telephone system.
11. Fire pumps status indicators.
12. Schematic building plans indicating the typical floor plan and detailing the building core, means of egress, fire protection systems, fire-fighting equipment and fire department access Worktable.

13. Generator supervision devices, manual start and transfer features.
14. Public address system, where specifically required by other sections of the IBC.
15. Evacuation Chairs and Evacuation Stretchers (each 4 no's per floor) shall be provided for evacuation in case of emergency.

11.0 ATRIUM REQUIREMENTS

11.1 DEFINITION

A large-volume space created by a floor opening or series of floor openings connecting two or more stories that is covered at the top of the series of openings and is used for purposes other than an enclosed stairway; elevator hoist way; escalator opening; or utility shaft used for plumbing, electrical, air-conditioning, or communication facilities.

11.2 USES PERMITTED WITHIN ATRIA

The occupancy within the atrium space shall meet the specifications for classification as low or ordinary hazard contents.

11.3 SEPARATION

An atrium shall be separated from the adjacent spaces by fire barriers of not less than 1-hour fire resistance rating with opening protective for corridor walls.

Exceptions:

1. Any number of levels of the building shall be permitted to open directly to the atrium without enclosure based on the results of the smoke control engineering analysis described above.
2. Glass walls and inoperable windows shall be permitted in lieu of the fire barriers where automatic sprinklers are spaced along both sides of the glass wall and the inoperable window at intervals not to exceed 1.83 m. The automatic sprinklers shall be located at a distance from the glass not to exceed 0.3 m. and should be arranged so that the entire surface of the glass is wet upon operation of the sprinklers. The glass shall be tempered, wired, or laminated glass held in place by a gasket system that allows the glass framing system to deflect without breaking(loading) the glass before the sprinklers operate. Sprinklers shall not be required on the atrium side of the glass wall and the inoperable window where there is no walkway or other floor area on the atrium side above the main floor level. Doors in such walls shall be glass or other material that resists the passage of smoke. Doors shall be self-closing or automatic-closing upon detection of smoke.
3. A glass-block wall assembly in accordance with IBC Section 2110 and having a ¾- hour fire protection rating.
4. The adjacent spaces of any three floors of the atrium shall not be required to be separated from the atrium where such spaces are included in the design of the smoke control system.

11.4 SMOKE CONTROL

11.4.1 System Design Criteria

Where an atrium exceeds 2 stories, an engineering analysis shall be performed to demonstrate that the building is designed to keep the smoke layer interface above the highest unprotected opening to adjoining spaces, or 1.83 m. above the highest floor level of exit access open to the atrium for a period equal to 1.5 times the calculated egress time or 20 minutes, whichever is greater. A smoke control system, where required, shall be installed in accordance with IBC Section 909.

11.4.2 System Activation

Where an engineered smoke control system is installed, the system shall be independently activated by each of the following:

1. The required automatic sprinkler system or automatic smoke detection device designed to activate the smoke control system.
2. Manual controls that are readily accessible to the fire department.

11.5 EGRESS TRAVEL

In other than the lowest level of the atrium, where the required means of egress is through the atrium space, the portion of exit access travel distance within the atrium space shall not exceed 60.96 m.

12.0 RISK ASSESSMENT REPORT

The fire and life safety risk assessment report of High Rise Hospital Building conforming to NFPA-1031 (Sec 5 &7) shall be prepared by, but not limited to any of the following reputable Institutions or organizations:

a. Institution of Fire Engineers (IFE, India) (or) BE Fire Engineers.
b. Authorized agency / experts panel of Institution of Fire Engineers (IFE) (or)
c. National Association of Fire Officers (NAFO, India) (or)
d. Any recognized university or any other agency approved by the Director General of Fire and Emergency Services, A.P., Hyderabad.

13.0 BASEMENT PROTECTION

13.1 General

i) Basements shall comply with the IBC for S-2 Storage occupancies.
   Exception: Means of Egress shall be in accordance with NFPA 5000 and NFPA 101.
ii) Basements shall not be used for any other purpose except parking and building services Exception: Specialized medical facilities/services compliant with NFPA 99 shall be permitted in the second level basement.

13.2 VENTILATON AND SMOKE MANAGEMENT

Basements Ventilation shall be provided as below: (NBC Part-4 (C.1.6).

i) The building shall be provided with the ventilation strictly in accordance with Part- VIII Section-I and Clause C-1.6.1 to C — 1.6.6 of Part-IV of National Building Code of India. The smoke control/extraction system shall be designed as per NBC Part-4/IBC Section909 and NFPA-92. Where conflicts exist, the most stringent provisions shall apply.
ii) Each basement shall be separately ventilated. Vents with cross-sectional area (aggregate) not less than 2.5 percent of the floor area spread evenly round the perimeter of the basement shall be provided in the form of

grills, or breakable stall board lights or pavement lights or by way of shafts. Alternatively, a system of air inlets shall be provided at basement floor level and smoke outlets at basement ceiling level. Inlets and extracts may be terminated at ground level with stall board or pavement lights should be in position easily accessible to the fire brigade and clearly marked ' SMOKE OUTLET' or" AIR INLET" with an indication of area Served at or near the opening. (NBC Part-4(C.1.6.1).

iii) The staircase serving basements shall be of enclosed type with a fire resistance the greater of not less than 2 hours or the floor/ceiling construction that it is Penetrating, and shall be situated at the periphery of the basement to be entered at ground level only from the open air and in such positions that smoke from any fire in the basement shall not obstruct any exit serving the ground and upper Stories of the building and shall communicate with basement through a lobby Provided with fire resisting self closing doors of 1 hour resistance. (NBC Part-4 (C.1.6.2), or as otherwise specified herein.

iv) In multi-storey basements, intake ducts may serve all basements levels, but each basement level shall have separate smoke outlet duct or ducts. Ducts so provided shall have the same fire resistance rating as the compartment itself. (NBC Part-4 (C.1.6.3) or as otherwise specified herein.

v) Mechanical extractors for smoke venting system from lower basement levels shall also be provided. The system shall be of such design as to automatically operate on activation of heat/smoke sensitive defectors or sprinklers. It shall also have an arrangement to be capable of a manual start. (NBC Part-4 (C.1.6.4).

vi) Mechanical extractors shall have an internal locking arrangement, so that extractors shall continue to operate and supply fans shall stop automatically with actuation of fire detectors. (NBC Part-4 (C.1.6.4.1).

vii) Mechanical extractors shall be designed to permit 30 air changes per hour in case of fire or distress call. (NBC Part-4 (C.1.6.4.2).

viii) Mechanical extractor shall have an alternative source of supply. (NBC Part-4 (C.1.6.4.3).

ix) Ventilating ducts shall be integrated with the structure and made out of brick masonry of reinforced cement concrete as far as possible and when this duct crosses the transformer area or electrical switchboard, fire dampers shall be provided. (NBC Part-4 (C.1.6.4.4).

x) If cutouts are provided from basements to the upper floors, these openings shall be protected by sprinkler head at close spacing so as to form a water curtain in the event office. (NBC Part-4 (C.1.6.6).

14.0 SMOKE COMPARTMENTATION

i) For every storey used by patient for sleeping or treatment, or other stories with an occupant load of 50 or more persons, floors shall be divided into separate fire/ smoke compartments with areas not exceeding 500 m2 and enclosing construction having a minimum 2 hour fire rating, unless otherwise specified herein.

ii) The services, standby generator and store must be segregated from others by erecting fire-resistant wall of not less than 2 hours rating. Each of the compartments must be individually ventilated and the opening for entry into each of these compartments must be fitted with self-closing fire / smoke check doors of not less than 1-1/2 hour fire rating.

iii) All electric cables shall be laid in separate shafts and shall be sealed at every floor with fire resistant material of similar rating. The wall in between and all around the shafts shall also be of minimum two hours fire rating. (clause 6.3 and C-9 Part-4 NBC, 2005).

iv) The entry to the staircase from all levels shall be segregated with a self-closing fire /smoke check door of not less than a 1-1/2 hour fire rating. All vertical and horizontal openings at each floor level throughout the building shall be sealed properly with the non-combustible material in order to maintain the rating of the barrier element. Wherever false ceiling / suspended ceiling is provided, it shall be of one hour fire rated material. The compartmentation shall be extended up to ceiling level. (clause 6.3 and C-9 Part-4NBC, 2005). Fire rated compartments shall extend slab to slab when a suspended ceiling is used.

v) The maximum travel distance to a smoke compartment door within a smoke compartment shall be 45.0 m.

vi) The smoke compartment shall be sized to accommodate occupants of the compartment plus occupant from adjacent compartments using 2.8 m2 per non-ambulatory occupants and 0.56 m2 for others.

vii) A means of egress shall be provided from each smoke compartment created by smoke barriers without having to return through the smoke compartment from which the egress path originated.

viii) Smoke compartments shall have 1-hour fire-resistive, smoke tight construction extending from exterior wall to exterior wall, or smoke barrier to smoke barrier, slab to slab, or any combination.
Exception: Smoke barriers shall not be required in interstitial spaces, where such spaces are designed and constructed with ceilings that provide resistance to the passage of fire and smoke equivalent to the provided by the smoke-barrier walls.

ix) Smoke compartment doors and draft assemblies shall have a minimum fire resistance rating of 45-minutes per 2.2.8.2 herein. Where doors are installed across corridors, a pair of opposite swinging doors without a center mullion or horizontal sliding doors shall be installed having vision panels consisting of fire- rated glazing materials in approved frames, the area of which should not exceed that tested. The doors shall be close fitting within operational tolerances, and shall not have undercuts, louvers or grilles. The doors shall have head and jamb stops, astragals or rabbets at meeting edges and should be automatic closing by smoke detection. Positive-latching devices are not required.

x) Where ducts penetrate smoke compartments, a listed smoke damper designed to resist the passage of smoke shall be provided at each point a duct or air transfer opening penetrates a smoke barrier. Smoke dampers and smoke damper actuation methods shall comply with IBC Section 716.3.2.1.
Exception: Smoke dampers are not required where the openings in ducts are l limited to a single smoke compartment and the ducts are constructed of steel.

xi) Buildings containing health care facilities shall be subdivided by smoke barriers into compartments as follows:
1. To divide every story used by inpatients for sleeping or treatment into not less than two smoke compartments,
2. To divide every story having an occupant load of 50 or more persons, regardless of use, into not less than two smoke compartments,
3. To limit the size of each smoke compartment required by (1) and (2) to an area not exceeding 2100m2, unless the area is an atrium separated in accordance with NFPA 101Section 8.6.7, in which case no limitation in size is required, and,
4. To limit the travel distance from any point to reach a door in the required smoke barrier to a distance not exceeding 45.0 m.

xii) The smoke barrier subdivision requirement in Item xi) herein shall not apply to the following:
(1) Stories that do not contain a health care occupancy located directly above the healthcare occupancy,

(2) Areas that do not contain a health care occupancy and that are separated from the health care occupancy by a fire barrier complying with NFPA 101, Section 7.2.4.3,
(3) Stories that do not contain a health care occupancy and that are more than one story below the health care occupancy, and,
(4) Open-air parking structures protected throughout by an approved, supervised automatic sprinkler system in accordance with Section 9.7.

15.0 ELECTRICAL REQUIREMENTS

Only Dry Type Transformer should be installed if located in the basements.
The construction of electric sub-station and installation of Transformer, LT & HT panels shall be as per the provisions specified by the Electrical Authority. However, the following points shall be followed:

i) The HT & LT panels shall be separated with walls of 2 hours fire resistance rating. Enclosure walls shall extend up to one meter above the highest point of the transformer.
ii) LT & HT panels shall be protected with manually operated CO2 protection system designed and installed per NFPA 12. Two dry chemical powder type fire extinguishers of 10 kg with BIS Certification marks shall be provided outside the transformer room.
iii) Insulated mats tested on 11 KV and at least one pair rubber gloves shall be provided in every electrical switch/panel room of substation. Independent ventilation system shall be provided for LT/HT panel and transformer rooms.

15.1 EMERGENCY ELECTRICAL SERVICES

Provide separate electrical circuits to feed emergency services and systems such as firefighting pumps, lifts, automatic fire detection, emergency voice/communication, fire alarm, staircase and emergency lighting, and exit signage shall be provided. Smoke venting and signage circuit shall be laid in separate conduit so that fire in one circuit will not affect the others. Master switches controlling essential services circuits shall be clearly labeled.
See Section 6.0 herein for additional requirements.

15.2 ELECTRICAL WIRING

i) The electrical wiring shall be provided in metal / FRLSPVC conduits. MCBs and ELCB shall be installed. The electrical services shall be strictly in accordance to Clause C.1.12 of Appendix-D' of NBC Part-IV/NFPA – 70. Fire resisting cables or fire resistance achieved by enclosing construction shall be used in the building. Power supply cables and the ducting shall not be taken through the staircase or any passage way used as an escape route. All the cables shall be only of Fire Resistant Low Smoke type when the fire resistance rating is derived solely from the cable use.
ii) Fault tolerant wiring in alarm system to be used (NFPA, 72 (3-4).

15.3 EMERGENCY POWER SUPPLY

a. The standby electric generator installed shall be of adequate capacity to supply power to staircase and emergency lighting circuits, lifts, exit signs, automatic fire detection, emergency voice/communication, fire alarm, and fire pumps in case of failure of normal electric supply. The generator shall be capable of taking starting current of all the machines and circuits stated above simultaneously and must be automatic in action (NFPA-110). The engine starting Battery system should be duplicated.
b. UPS shall be installed to cater to the critical load of Alarm and Public Address System (NFPA-111).
c. A dedicated 25 KW emergency electrical generator should be installed to back up the main standby generator for alarm system, Public Address System and UPS.

See Section 6.0 herein for additional requirements.

16.0 DECORATIVE MATERIALS AND FURNISHINGS

i) All the fabric used for seats, curtain, covering on sidewall, matting/ carpeting etc. shall also have Class-I rating as prescribed in NBC Part-IV/NFPA,99.
ii) Draperies, curtains, furnishings and decorations shall comply with Chapter 10 – Interior Finish, Contents and Furnishings, NFPA 101.
iii) Only flame retardant material shall be used for interior decoration and upholstery top recent generation of toxic smoke / fumes. (NBC Part-4 (3.4.15)

See NFPA 101 Section 18.7.5 for additional requirements.

17.0 AIR-CONDITIONING SYSTEM

Air conditioning system shall conform to Clause D-1.17 of part IV and Section 3 of Part VIII of National Building Code of India. However, following points shall be ensured:

a) Air ducts serving main floor areas, corridors etc. shall not pass through the staircase enclosures.
b) Automatic fire dampers shall be provided in the ducts at the inlets of the fresh air and return air of each compartment /floor on every floor. The fire dampers shall be so arranged so as to close by gravity in the direction of the air movement and to remain tightly closed automatically upon operation of smoke/ heat detectors and signal transmittal to the fire alarm system.
c) The air handling units shall be separate for each floor/each compartment at each floor level. The air ducts for every floor/compartment shall be separated and not interconnected with the ducting of any other compartment.

See NFPA 101 Section 18.5.2 for additional requirements.

18.0 REFUGE FLOOR/AREA

a) One refuge floor at a height of 30.0 meters shall be provided for safe evacuation with maximum of 2.5 meters floor height.
b) Refuge areas as per clause 4.12.3 part 4 of NBC 2005, i.e., 0.3m2 per person of two consecutive floors at the height of 24m, 39m and 54m levels shall be provided.
c) Refuge area - definition: An area of refuge is a location in a building designed to hold occupants during a fire or other emergency, when evacuation may not be safe or possible. Occupants can wait there until rescued by firefighters. This can apply to the following:
   - any persons who cannot access a safe escape route

- any persons assisting another person who is prevented from escaping
- patients in a hospital
- sick people
- people with disabilities
- old people
- very young children or infants

Medical personnel who may be operating on a patient at the time of the emergency.

d) Technical requirements: An Area of refuge is typically equipped with a steady supply of fresh outside air. The ducting that must supply such fresh air is referred to as pressurization ductwork. Such ductwork are items of passive fire protection, subject to fire testing, product certification, and listing and approval use and compliance. The idea is that the ductwork must remain operable even while exposed to fire for a duration of two hours. The electrical equipment supplying power must also be equipped with approved circuit integrity measures. (NFPA 70 & 99).
e) Refuge area shall not be utilized for any other purpose and shall be kept vacant for the assembly of occupants in case of any emergency.

19. 0 OTHER REQUIREMENTS

a) Provision for Helipad should be made on the terrace floor (roof) according to the guidelines issued by the Director General, Civil Aviation, Government of India, New Delhi in Section (4) Series 'B' Part-ll dt. 21.12.2005. NFPA 418 shall be used as guidance.
b) Fluorescent colored floor strips / glowing paint signs on the walls shall be provided on all floors at each level to guide the direction for escaping towards a safe place in case of an emergency.
c) Separate Ramps to the Basement for entry and exit of vehicles shall be provided.
d) The hospital developer/firm shall provide all the required Fire Safety measures (Passive & active) and Fire prevention procedures and planning, training and drills programmers' for the isolation of fire, transfer of occupants to areas of refuges or total evacuation of the building during the course of constructing Hospitals. The builder shall submit the certificates from the manufacturers of all Fire Fighting Equipments installed.

Also see Section 5.5, Item 6 herein for additional requirements pertinent to Areas of Refuge.

20.0 MANAGEMENT AND MAINTENANCE OF GENERAL FIRE SAFETY MEASURES

The Management of the High Rise Hospital Building shall observe the following: General Fire Safety measures that shall be adhered to at all times for purposes of fully complying with the Manufacturer's instructions and NBC/NFPA stipulations. NFPA 13,25,99,101, and 110 provide several options so that the more suitable option is adopted. The particular option adopted shall be clearly indicated and approval from Fire Services should be obtained.

20.1 FLAMMABLE LIQUIDS

The maximum allowable quantities (MAQ's) of flammable materials shall comply with NFPA 30. The handling of such liquids shall not be permitted by unauthorized persons. (NFPA 99)

20.2 HEATING EQUIPMENT:

The doors to furnace room shall be equipped with automatic closers and be kept closed.
The flues, pipes and steam lines shall be in good condition and properly insulated.
There shall be a gas cut-off outside the building.

20.3 KITCHENS :

i. The cooking equipment shall be provided with a steel range hood.
ii. The cooking facilities shall be provided with a pre-engineering fire suppression system..
iii. The discharge of automatic extinguishing system shall be monitored by the fire alarm system and provide occupant notification.
iv. Cooking facilities shall be protected per NFPA 101, Section 18.3.2.5.

20.4 LAUNDRY:

i. The laundry doors to the main building shall be kept normally closed.
ii. The electric devices and irons shall have operative automatic heat controls.
iii. Keep the tumbler free from lint and dust.
iv. Safety pilot lights shall be operative.

20.5 LABORATORY:

i. Flammable liquids shall be stored properly in listed flammable liquids cabinets or an other approved manner.
ii. The acids stored shall be handled and properly stored.
iii. The connections of gas fired or open flame equipment shall be in good condition.

20.6 OXYGEN & NITROUS OXIDE STORAGE :

i. The oxygen and nitrous oxide cylinders shall be stored separately from other gases in accordance with the applicable NFPA standards.
ii. 'No Smoking' signs and nitrous oxide warnings shall be posted on store room doors.
iii. The cylinders shall be protected from the sun.
iv. The cylinders shall be removed from steam pipes or radiators to prevent contact.

20.7 GENERATORS:

i. Generators shall be in good operating condition.
ii. Generators shall start automatically.
iii. Generators shall be tested under load monthly.

20.8 WATER HEATERS:

i. The water heaters shall be properly vented.
ii. The water heaters shall be equipped with 100% safety pilots.
iii. The water heaters shall be equipped with pressure relief valves.

20.9 GENERAL

i. Corridors shall be kept free from storage of beds, linen, carts, etc.
ii. The space beneath stairs and elevators shall be kept free from storage of any materials.
iii. The trash and laundry chutes shall be sprinklered and additionally comply with NFPA

101 Section 18.5.4.

i. The covers on breaker panels and face plates shall be kept in good condition.
ii. The appliance cords shall be kept in good condition.
iii. The appliance cords shall be protected against mechanical injury.
iv. Only approved metal containers shall be used for all oily waste, polishing or cleaning materials.
v. Combustible liquids shall be kept in approved metal cans.
vi. The refuse should be removed from the premises or burned daily.
vii. The sprinkler heads shall be unobstructed and adequate clearances maintained.
viii. All employees shall be made aware of the location of fire extinguishers and be trained in its use and operation.
ix. The fire alarm devices on each floor shall be maintained in good working condition.
x. The signs giving location of pull stations should be properly maintained.
xi. The pull stations shall be unobstructed and plainly marked.
xii. The plan for evacuation of patients shall be prepared and displayed at appropriate places.

20.10 FIRE ALARM SYSTEM SEQUENCE OF OPERATION:

Operation of any manual pull station, automatic smoke detector, heat detector, and duct mounted smoke detector or water flow switch shall cause the following actions and indications:

a) The system common alarm LED on the CPU shall flash. The internal audible device shall sound.
b) The 80 character backlit alphanumeric display, shall display the device type, device location, time and date of alarm and a unique custom message.
c) Transfer common alarm contacts for sending an alarm signal to an approved central station. (Two dedicated telephone lines, connection and service by owner).
d) Activate the fire alarm audio/visual signals throughout the facility.
e) Shutdown all AHUs over 2000 cfm.

Operation of any operating room ceiling mounted smoke detector or return air duct smoke detector shall cause the following actions and indications:

a) Return air damper shall transfer to fully closed.
b) Outside air damper shall transfer to fully open.
c) Exhaust damper shall transfer to fully open and activate exhaust fan.

Operation of outside air or supply air duct smoke detector unit shall shut down. Exhaust damper shall remain in full open position or transfer to that position and activate exhaust fan.

21.0 FIRE MANAGEMENT

a. **FIRE CONTROL ROOM: -** Fire control room shall be established on the ground floor, near the entrance and shall be manned round the clock.
b. **FIRE STATION:** The builder shall provide a Fire Station on a suitable plot measuring 1000sq.y with (i) onetime Non-Recurring cost of Building, Water Tender & Equipment and a Hydraulic platform with 54.0 meters. Working height and (ii) Recurring cost of salaries, POL, etc., for 5 years as processing fee.
c. **FIRE OFFICER AND CREW** :- A Fire Officer with experience of not less than 3 years in Government / public Sector undertakings / corporate Sector in the rank of Station Fire Officer or above shall be available on the premises along with security personnel trained in firefighting and rescue for purposes of maintaining fire safety systems in trim working condition at all times and to conduct training in first aid firefighting and fire drills. The Fire Officer with trained fire personnel shall respond to all emergency calls in the Hospital round the clock
d. FIRE SAFETY PLAN : (NFPA – 101 (18.7.2.1)
Fire Safety plan should be developed by the management and should be approved by the Director General of Fire and Emergency Services before occupancy. The following shall be provided in the written Fire safety Plan to train response teams, maintenance staff, nursing staff and fire wardens.
   i) The use of alarms
   ii) Staff response to alarms
   iii) Fire Confinement
   iv) Occupant evacuation of the immediate area
   v) Occupant evacuation of Individual smoke compartment
   vi) Total building evacuation
   vii) Fire extinguishment.
e. **BUILDING EVACUATION SUPERVISOR**: The Owner / Occupier shall appoint a Building Evacuation Supervisor for conducting and documenting results of periodical Fire Drills for compliance of timed egress provisions in the NBC.
f. **FIRE DRILLS**: Fire drills shall be conducted once in every month and shall include the employees and staff members of all shifts. Fire Drills shall include assignment of staff to close doors where necessary to prevent spread of smoke or fire, to search the lavatories or other rooms, to account for all occupants, to achieve prompt, quiet, orderly evacuation of the building or relocation to area of refuge, (refer Annexure - E part - 4 of NBC of India, 2005).

22.0 OTHER STIPULATIONS

(Reproducing as provisioned in department draft guidelines)

INSPECTION:- Inspections shall be undertaken at periodic intervals as below:
The inspection of High Rise Building shall be conducted once in a year for the issuance of renewal of No Objection Certificate for occupancy. A certificate to the effect that all the required fire safety measures are provided and functioning satisfactorily shall be enclosed to the application duly signed by the Fire Protection Engineer for considering the renewal of No Objection Certificate for occupancy. Random checks will be done by the State Disaster Response & Fire Services Department.

Periodical Inspection by the officers of State Disaster Response & Fire Services Department shall be once in six months after receipt of certificate as above and it is the responsibility of the Management to ensure that all fire prevention and Safety Systems installed are maintained in good working condition.

INSURANCE: The builder shall duly insure all the occupiers (i.e., Doctors, Nurses, employees, patients, visitors attendants and emergency service personnel etc.) of High Rise Hospital including Building and equipment against all Disasters after obtaining No Objection Certificate for Occupancy from Fire Services Department.

a) **MAINTENANCE & MANAGEMENT:** Such High Rise Hospital Building shall be under the overall control and management of a single management body who shall be responsible for the fire and life safety. Maintenance shall comply with applicable standards and NFPA.
b) **PENALTIES:** The owner/firm or occupier and Fire Protection Engineer of the premises who contravenes these stipulations shall be guilty of an offence and is liable for penal action under Section 31 of the A.P. Fire Service Act, 1999 and other relevant laws.

23.0 PLANNING AND EXECUTION

i) The Fire Prevention and Life safety requirements shall be met by engaging the services of an experienced engineering firm with a track record of having designed and executed minimum five such Buildings of similar in height as per NFPA. Apart from providing facilities for undertaking external firefighting measures, internal fire safety and protection measures are required to be provided and maintained as given in these stipulations. (NFPA-1-17.8.4.5, NFPA – 1031-5.7)
ii) The designer shall ascertain local conditions like availability of Water, reliable power, material and equipment certified to be fit for fire service, maintenance resources, traffic conditions, communications, record of compliance of similar hospitals and any additional information provided by the Department. He shall be familiarized with nature of occupants including non- patients who would have to be safely exited in emergencies. He shall confirm and explain how the above have been factored in the design.
iii) Adverse local conditions, known to have contributed to poor compliance with fire safety shall have mandatory to be factored in by stipulating possible compensative measures to ensure effective compliance, enforcement and provide for human errors, duly considering local constraints, so that safety is not compromised and INTENT of any code provision is not violated. The above is in line with, sec.13 of AP Fire Act, CL.10 part-2 of NBC and NFPA – 1.
iv) Intelligent Smoke management to ensure safe evacuation and non-erasable record of alarm to monitor integrity of critical safety equipment like Sprinkler system, Public Address system and emergency generators shall be provided.

(BY ORDER AND IN THE NAME OF THE GOVERNOR OF ANDHRA PRADESH)

T.S. APPA RAO
PRINCIPAL SECRETARY TO GOVERNMENT

ANNEXURE – V
(Rule-15.a.v)

SPECIAL REQUIREMENTS FOR PLANNING OF PUBLIC BUILDINGS MEANT FOR USE OF PHYSICALLY CHALLENGED
(AS PER Part-III clause 12.21 of NBC-2005)

D-1 GENERAL
D-1.1 These requirements apply to all buildings and facilities used by the public. These apply to temporary or emergency conditions as well as permanent conditions. It does not apply to private residences.

These requirements are concerned with non-ambulatory disabilities, semi-ambulatory disabilities, sight disabilities, hearing disabilities, disabilities of in coordination, aging, allergies, heart and lung diseases, epilepsy, haemophilia, incontinence and enterostomy.

It is intended to make all buildings and facilities used by the public accessible to, and functional for the physically challenged through and within their doors, without loss of function, space or facility where the general public is concerned. It supplements the general requirements of the Code, and reflects greater concern for safety of life and limb. In case of practical difficulty, unnecessary hardship, or extreme differences, the Authority may grant exceptions from the literal requirements of this Annes or permit the use of other methods or materials, but only when it is clearly evident that equivalent facilities and protection are thereby secured.

D-1.2 For the purpose of this Annex, the following definitions shall apply.

D-1.2.1 Aging
Those manifestations of the aging processes that significantly reduce mobility, flexibility, co-ordination, and perceptiveness but are not accounted for in the categories mentioned in D-1.2.3.1 to D-1.2.3.9.

D-1.2.2 Appropriate Number
The number of a specific item that would be necessary, in accordance with the purpose and function of building or facility, to accommodate individuals with specific disabilities in proportion to the anticipated number or individuals with disabilities who would use a particular building or facility.

D-1.2.3 Disabilities

D-1.2.3.1 Non-ambulatory disabilities
Impairments that, regardless of cause or manifestation, for all practical purposes, confine individuals to wheelchairs.

D-1.2.3.2 Semi-ambulatory disabilities
Impairments that cause individuals to walk with difficulty or insecurity. Individuals using braces or crutches, amputees, arthritis, spastics and those with pulmonary and cardiac ills may be semi-ambulatory.

D-1.2.3.3 Sight disabilities
Total blindness or impairments affecting sight to the extent that the individual functioning in public areas is insecure or exposed to danger.

D-1.2.3.4 Hearing disabilities
Deafness or hearing handicaps that might make an individual insecure in public areas because he is unable to communicate or hear warning ,signals.

D-1.2.3.5 Disabilities of into-ordination
Faulty co-ordination or palsy from brain spinal, or peripheral nerve injury.

D-1.2.3.6 People with allergies
People with allergies may be sensitive to dust, mildew, pollen, animal hair, formalin, turpentine, etc. Some are sensitive to contact with substances and materials, such as, nickel, chromium and rubber.

D-1.2.3.7 People with heart and lung diseases
People with heart and lung diseases may only be able to walk short distances and may be unable to climb stairs. The requirements of these people are similar to those with impaired mobility.

D-1.2.3.8 People with epilepsy, hemophilia, etc
The requirements of those with epilepsy, hearnophilia, etc, are related primarily to the design of buildings and the need to minimize the risk of injury caused by falling or encountering obstacles.

D-1.2.3.9 People with incontinence, enterostomy operations, etc
The requirements of people with incontinence, enterostomy operations, etc (colostomies, ileostomies and urostomies) are mainly related to bathroom provision6. In certain circumstances, for example, in public water-closet compartments, it may be desirable
to provide a special sink for emptying urine bags.

D-1.2.4 Fixed Turning Radius, Front Structure to Rear Structure
The turning radius of a wheelchair, left front-foot platform to right rear wheel, or right front-foot platform to left rear wheel, when pivoting on a spot.

D-1.2.5 Fixed Turning Radius Wheel
The tracking of the caster wheels and large wheels of a wheelchair when pivoting on a spot.

D-1.2.6 Involved (Involvement)

A portion or portions of the human anatomy or physiology, or both, that have a loss or impairment of normal function as a result of genesis, trauma, disease, inflammation or degeneration.

D-1.2.7 Ramps, Ramps with Gradients
Because the term 'ramp' has a multitude of meanings and uses, its use in this text is clearly defined as ramps with gradients (gradual slope joining two level surfaces) that deviate from what would otherwise be considered the normal level. An exterior ramp, as distinguished from a 'walk', would be considered an appendage to a building leading to a level above or below the existing ground level.

D-1.2.8 Walk Walks
Because the terms 'walk' and 'walks' have a multitude of meanings and uses, their use in this standard is clearly defined as a predetermined prepared surface, exterior pathway leading to or from a building or facility, or from one exterior area to another, placed on the existing ground level and not deviating from the level of the existing ground immediately adjacent.

D-2 SITE DEVELOPMENT

D-2.1 Almost any building can be made accessible to physically challenged persons by so planning the site that the terraces, retaining walls and winding walks are used effectively.

D-2.1.1 Site development is the most effective means to resolve the problems created by topography, definitive architectural designs or concepts, water table, existing streets, and typical problems, singularly or collectively, so that aggress, ingress and egress to buildings by physically challenged maybe facilitated while preserving the desired design and effect of the
architecture.

D-2.2 Walks

D-2.2.1 Public walks should beat least 1200 mm wide and should have a gradient not greater than I in 20.

D-2.2.1.1 It is essential that the gradient of walks and driveways be less than that prescribed for ramps, since walks would be devoid of handrails and kerbs and would be considerably longer and more \vulnerable to the elements. Walks of near maximum grade and considerable length should have level areas at intervals for purposes of rest and safety. Walks or driveways should have a non-slip surface.

D-2.2.2 Such walks shall be of a continuing common surface not interrupted by steps or abrupt changes in level.

D-2.2.3 Wherever walks cross other walks, driveways, or parking lots they should blend to a common level.

D-2.2.3.1 This requirement, does not require the elimination of kerbs, which, particularly if they occur at regular intersections, are a distinct safety feature for all of the challenged, particularly the blind. The preferred method of meeting the requirement is to have the walk incline to the level of the street. However, at principal intersections, it is vitally important that the kerbs run parallel to the street, up to the point where the walk is inclined, at which point the kerb would turn in and gradually meet the level of the walk at its highest point. A less preferred method would be to gradually bring the surface of the driveway or street to the level of the walk. The disadvantage of this method is that a blind person would not know when he has left the protection of a walk and has entered the hazards of a street or driveway (see Fig. 9).

D-2.2.4 A walk shall have a platform at the top which is at least 1 500 mm long, if a door swings out onto the platform or towards the walk. This platform shall extend at least 300 mm beyond each side of the doorway.

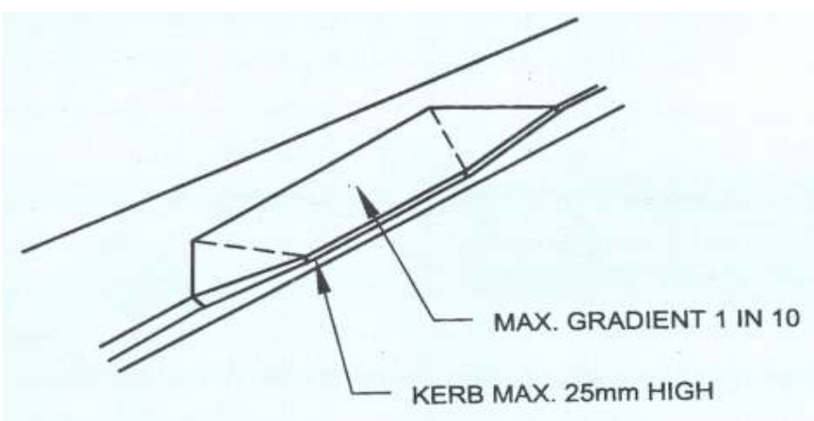

FIG. 9 SUITABLE METHOD OF BLENDING PAVEMENT AND ROADWAY SURFACES

D-2.2.5 A walk shall have a level platform at least 900 mm deep, if the door does not swing onto the platform or towards the walk. This platform shall extend at least 300 mm beyond each side of the doorway.

D-2.3 Parking Space

D-2.3.1 Spaces that are accessible and approximate to the facility should be set aside and identified for use by individuals with physical disabilities.

D-2.3.2 A parking space open on one side, allowing room for individuals in wheelchairs or individuals on braces and crutches to get in and out of an automobile onto a level surface, is adequate. It should have a minimum width of 2700 mm preferably 2 800 mm for ambulant disabled and minimum 3 000 mm preferably 3300 mm for wheel chair users.

D-2.3.3 Parking spaces for individuals with physical disabilities when placed between two conventional diagonal or head-on parking spaces should be 3.6 m to 3.8 m wide and the length of the aisle should 7.3 m, 6.1 m and 6.5 m for head-on, 90° and 60° parking respectively.

D-2.3.4 Care in planning should be exercised, so that individuals in wheelchairs and individuals using braces and crutches are not compelled to wheel or walk behind parked cars.

D-2.3.5 Consideration should be given to the distribution of spaces for use by the disabled in accordance with the frequency and persistency of parking needs.

D-2.3.6 Walks shall be in conformity with D-2.2.

D-3 BUILDINGS

D-3.1 Ramps with Gradients
Where ramps with gradients are necessary or desired, they shall conform to the following requirements (see Fig. 10)/.

D-3.1.1 A ramp when provided should not have a slope greater than 1 in 20 or maximum of 1 in 12 for short distance up to 9000 mm.

D-3.1.2 A ramp shall have handrails on at least one side, and preferably two sides, that are 900 mm high, measured from the surface of the ramp, that are smooth, and that extend 300 mm beyond the top and bottom of the ramp. Where major traffic is predominantly children, the handrails should be placed 760 mm high.

NOTES

1 Where handrails are specified to be of heights other than 80 cm, it is recommended that two sets of handrails be installed to serve all people. Where major traffic is predominantly children, particularly physically disabled children, extra care should be exercised in the placement of handrails, in accordance with the nature of the facility and the age group or groups being serviced (see also D-3).

2 Care should be taken that the extension of the handrails is not in itself a hazard. Extension up to 300 mm may be made on the side of a continuing wall.

D-3.L3 A ramp shall have a surface that is non-slip surface and if length is 3500 mm, the minimum width shall be 1500 mm.

D-3.1.3.1 The provision of non-slip surfaces on ramps greatly assists the challenged persons with semi ambulatory and ambulatory disabilities. Non-slip surfaces are provided by many finishes and materials. The surfaces of the concrete ramps can be made nonskid by brooming the surface or by finishing with an indenting roller.

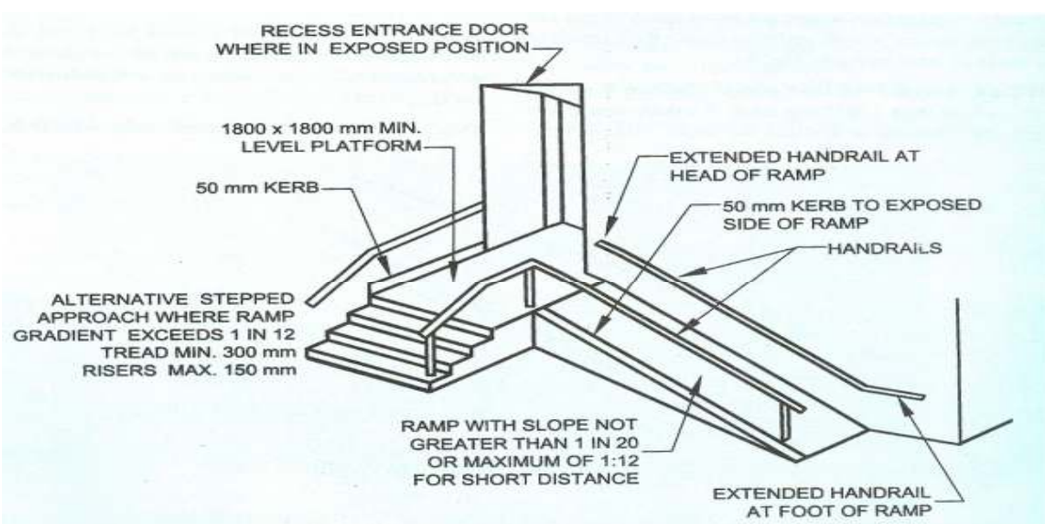

FIG. 10 EXAMPLE OF RAMPED APPROACH

D-3.1.4 A ramp shall have a level platform at the top which is at least 1 800 mm long, if a door swings out onto the platform or toward the ramp. This platform shall extend at least 300 mm beyond each side of the doorway (see Fig. 11). D-3.1.5 Each ramp shall have at least 1800 mm of straight clearance at the bottom.

D-3.1.6 Ramps shall have level platforms at 10 m to 12 m intervals for purposes of rest and safety, and shall have platforms minimum 1.5 m length wherever they turn.

D-3.1.7 For visually impaired people, ramps may be colour contrasted with landing.

D-3.1.8 To minimize rise to wheelchair users, ramps should be equipped with herbs approximately 50 mm high at exposed sides.

D-3.2 Entrances

D-3.2.1 At least one primary entrance to each building shall be usable by individuals in wheelchairs (see Fig. 12A) and shall be indicated by a sign (see Fig. 12B).

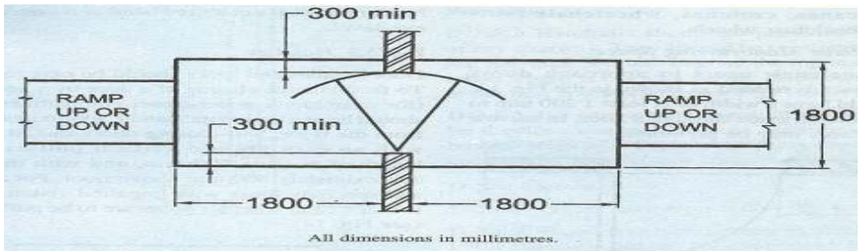

All dimensions in millimetres.

FIG. 11 LEVEL AREAS REQUIRED AT END OF RAMPS LEADING TO DOORWAYS

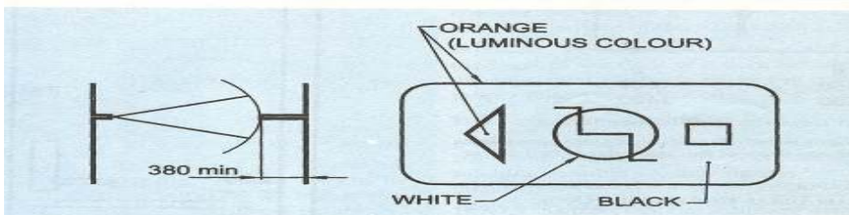

12A PLAN OF DOORS SUITABLE FOR THE WHEELCHAIR BOUND

12B SIGN FOR USE AT THE ENTRANCE

FIG. 12 ENTRANCES

D-3.2.2 At least one entrance usable by individuals in wheelchairs shall be on a level that would make the elevators accessible.

D-3.3 Doors and Doorways

D-3.3.1 Doorwidth
To enable wheelchair users to pass through doors, the minimum clear width should be 900 mm and shall be operable by a single effort. In certain cases the clear width should be 900 mm to 1000 m, for example, if the wheelchair has to be turned in the doorway, where there is a door-closer or at entrance doors to public buildings and in other situations where there is considerable traffic.

D-3.3.1.1 Two-leaf doors are not usable by those with disabilities defined in D-1.2.1, D-1.2.2 and D-1.2.5 unless they operate by a single effort, or unless one of the two leaves meets the requirements of D-3.3.1.

D-3.3.1.2 Side-hung doors
To facilitate wheelchair manoeuvre, doors should be hung with the hinges in room corners. Doors opening out into corridors or circulation spaces should be avoided as far as possible.

D-3.3.1.3 It is recommended that all doors have kick plates extending from the bottom of the door to at least 400 mm from the floor, or be made of a material and finish that would safely withstand the abuse they might receive from canes, crutches, wheelchair foot platforms, or wheelchair wheels.

D-3.3.2 Wheelchair Manoeuvring Space

To enable wheelchair users to approach doors manoeuvring space is needed as shown in the Fig. 13. A corridor should have a width of at least 1 200 mm to allow a 90° turn to be made through a door. In narrow spaces sliding doors may be preferable.

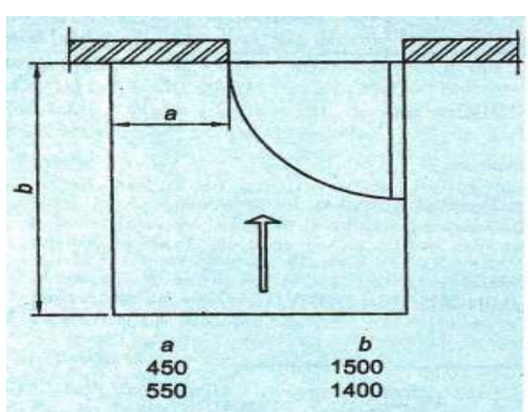

a	b
450	1500
550	1400

All dimensions in millimetres.

NOTE — Depending on the free space beside the opening side (450 or 550 mm), the depth of free space should be 1 500 or 1 400 mm.

FIG. 13 MANOEUVRING SPACE NEEDED FOR WHEELCHAIR USERS TO APPROACH DOORS

D.3.3.3 Threshalds

Raised thresholds should be avoided, but where this is not possible, their height should not exceed 25 mm, Rubber theresholds are advantageous for wheelchair users.

D.3.3.3.1 Care should be taken in the selection, placement and setting of door closers so that they do not prevent the use of doors by the physically disabled. Time-delay door closers are recommended.

D3.3.3.2 Self –Closing doors

Wheelchair user and other with impaired mobility have difficulty in using self –closing doors. The force required to open them should be reduced as for as possible. Public buildings should preferably have sliding automatic doors.

D.3.3.4 Door Identification

To help people with impaired vision to see doors, the door and frame should be in a colour which contrasts with the adjoining wall. Glass or glazed doors should be marked with a coloured band or frame a little below eye-level.

D.3.3.5 Handles

Door handles and locks should be easy to manipulate. To facilitate the closing of a door by wheelchair users (for example, a whiter closet compartment_. The door should have a horizontal handle approximately 800mm from the floor. Self –closing doors should be equipped with an easy gripped vertical pull-handle with a length of at least 300-mm , and with and the lower end approximately 800mm above floor. For many people and specially those with impaired vision. It is helpful to make clear whether doors are to be pulled or pushed

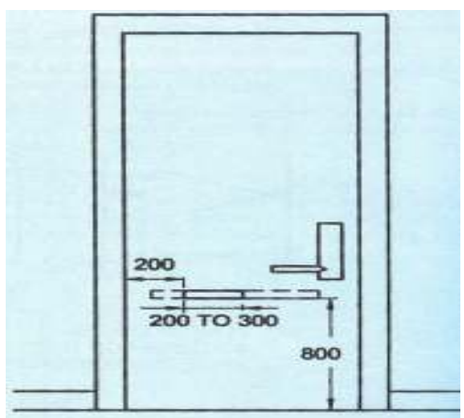

All dimensions in millimetres.

Fig. 14 Position of Handle

D-3.4 Windows

Windows should be designed to avoid the glare which is a particular problem for people with impaired vision. Large glass areas close to circulation spaces should be marked a little below eye-level with a coloured band or frame. To enable wheelchair users to see through a window comfortably, the sill should be easy to open and close. Their controls should be placed in the zone 900 to 1200 mm from floor (see Fig.15)

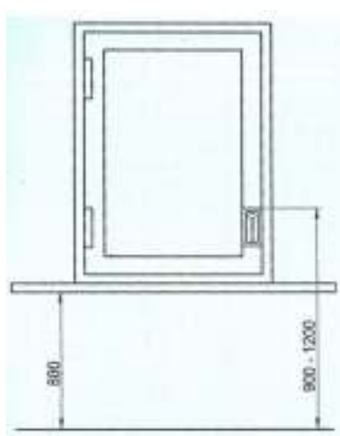

D-3.5 Stairs

Stairs should not be the only means of moving between floors. They should be supplemented by lifts or ramps.

D-3.5.1 Straight flights of steps are preferred by ambulant disabled people. Treads should be approximately 300

mm deep and risers not higher than 150 mm. Steps should be of a consistent height and depth throughout the stair. Projecting nosings and open stairs should be avoided to minimize the risk of stumbling.

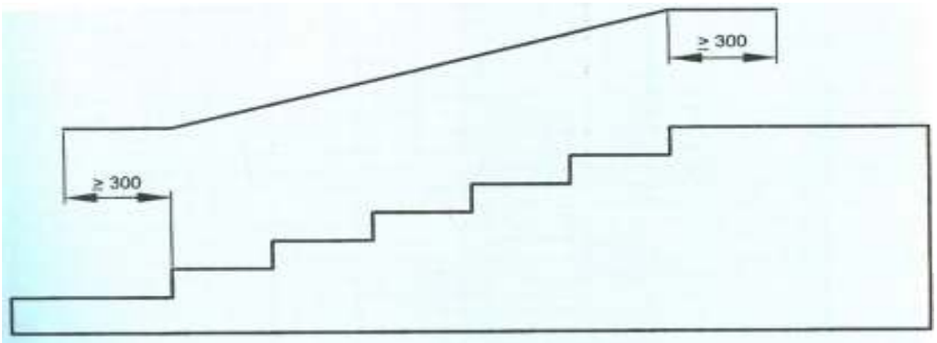

All dimensions in millimetres.

FIG. 16 EXTENSION OF HANDRAIL IN STAIRS

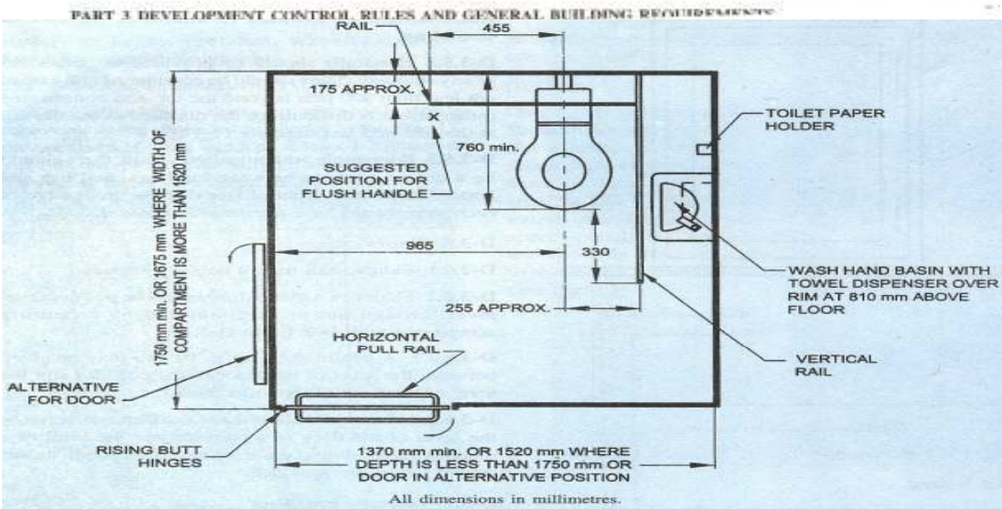

All dimensions in millimetres.

FIG. 17 SUGGESTED PLAN OF WC COMPARTMENT FOR THE WHEELCHAIR BOUND

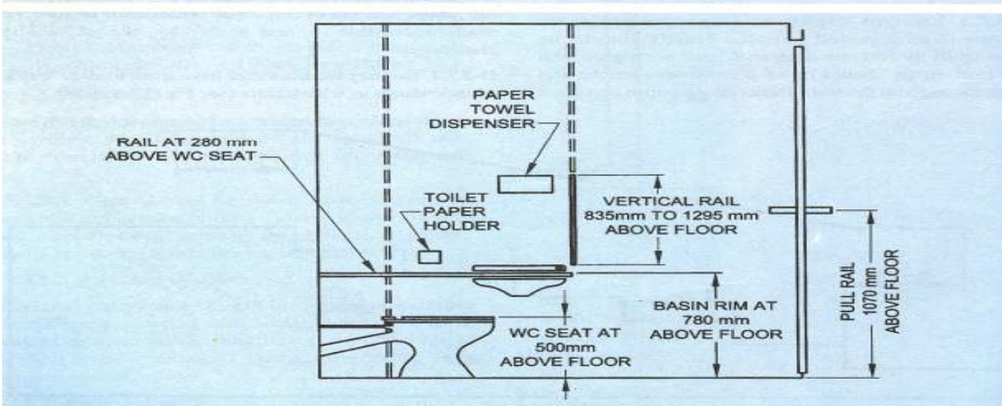

All dimensions in millimetres.

FIG. 18 SECTION THROUGH WC COMPARTMENT FOR THE WHEELCHAIR BOUND

D-3.5.2 Handrails should be provided to both sides of any stairway. They should be continuous and extend not less than 300 mm beyond the top and bottom step (otherwise it is difficult for the disabled to use the rail at the first and last step. See Fig 16).

D 3-3.5.3. For people with impaired vision, there should be a colour contrast between landings, and top and bottom steps of a flight of steps, or the front edge of each step should have a contrasting colour.

D-3.6 Floors

D-3.6.1. Floors shall have a non-slip surface.

D-3.6.2 Floors on a given storey shall be of a common level throughout or be connected by a ramp in accordance with D-3.1.1 to D-3.1.8

D-3.6.2.1 A gentle slope up to 10 mm may be given between the level of the floor of the corridor and the level of the floor of the toilet rooms.

D-3.6.2.2 There should not be a difference between the level of the floor of a corridor and the level of a meeting room, dining room, or any other room, unless proper ramps are provided.

D-3.7 Sanitary Facililties

It is essential that sanitary facilities, in accordance with the nature and use of a specific building or facility, be made accessible to and usable by, the physically challenged.

D-3.7.1 Sanitary facilities shall have space to allow traffic of individuals in wheelchairs (see Fig.17 and 18.)

D-3.7.2 Sanitary facilities shall have at least one water- designs demand, so that they are usable by individuals closet cubical for the ambulant disabled (see Fig. 19 in wheelchairs. and 20), that: D-3.7.3.1 The drain pipes and hot-water pipes under

a) is 900 mm wide;
b) is at least 1500 mm, preferably 1600 mm deep;
c) has a door (where doors are used), that is, 800 mm wide and swings out;
d) has handrails on each side, 780 mm high and parallel to the floor, 40 mm clearance between rail and wall, and fastened securely at ends and centre; and
e) has a water-closet with the seat 500 mm from the floor.

NOTE— The design and mounting of the water-closet is of considerable importance. A wall-mounted water closet with a narrow understructure that recedes sharply is most desirable. If a floor mounted water-closet must be used, it should not have a front that is wide and perpendicular to the floor at the front of the seat. The bowl should be shallow at the front of the seat and turn backwards more than downwards to allow the individual in a wheelchair to get close to the water-closet with the seat of the wheelchair.

D-3.7.3 Sanitary facilities shall have wash basis with narrow aproans. Which when mounted at standard height are usable by individuals in wheelchair : or they shall have wash basins mounted higher, when particular designs demand, so that they are usable by individuals In wheelchair.

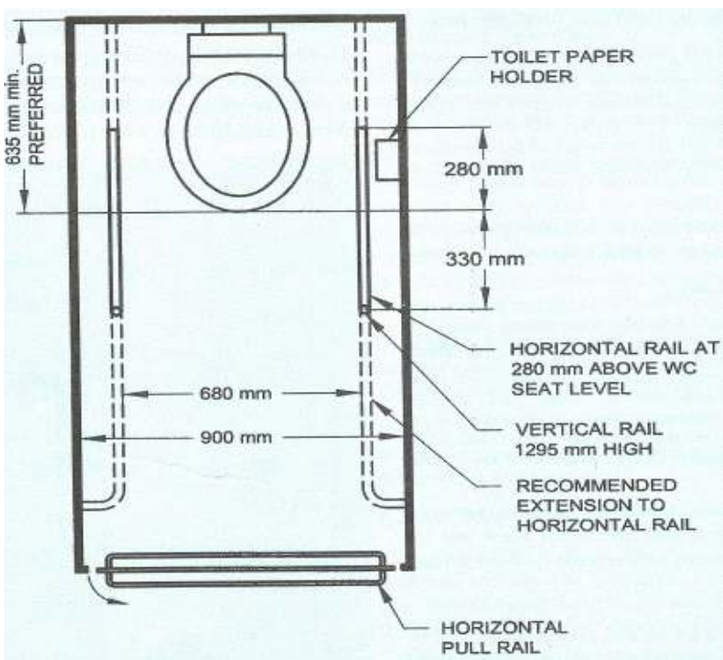

FIG. 19 SUGGESTED PLAN WC COMPARTMENT FOR THE AMBULANT

D-3.7.3.1 The drain pipes and hot-water pipes under a sanitary appliance that be covered or insulated so that a wheelchair individual do not find it inconvenient.

D-3.7.4 Some mirrors and shelves shall be provided above the wash basins at a height as low as possible and not higher than 1 m above the floor, measured from the top of the shelf and the bottom of the mirror.

D-3.7.5 Sanitary facilities for men shall have wall mounted urinals with the opening of the basin 460 mm from the floor, or shall have floor-mounted urinals that are on level with the main floor of the toilet room.

D-3.7.6 Toilet rooms shall have an appropriate number of towel racks, towel dispensers, and other dispensers and disposal units mounted not higher than 910 mm from the floor.

D-3.8 Drinking Fountains
An appropriate number of drinking fountains or other
.
D-3.7.3 Sanitary facilities shall have wash basins with water-dispensing means shall be accessible to and usable by the physically disabled. narrow aprons, which when mounted at standard height are usable by individuals in wheelchairs: or they shall

D-3.8.1 Drinking water fountains or water coolers . have wash basins mounted higher, when particular shall have up front spouts and control.

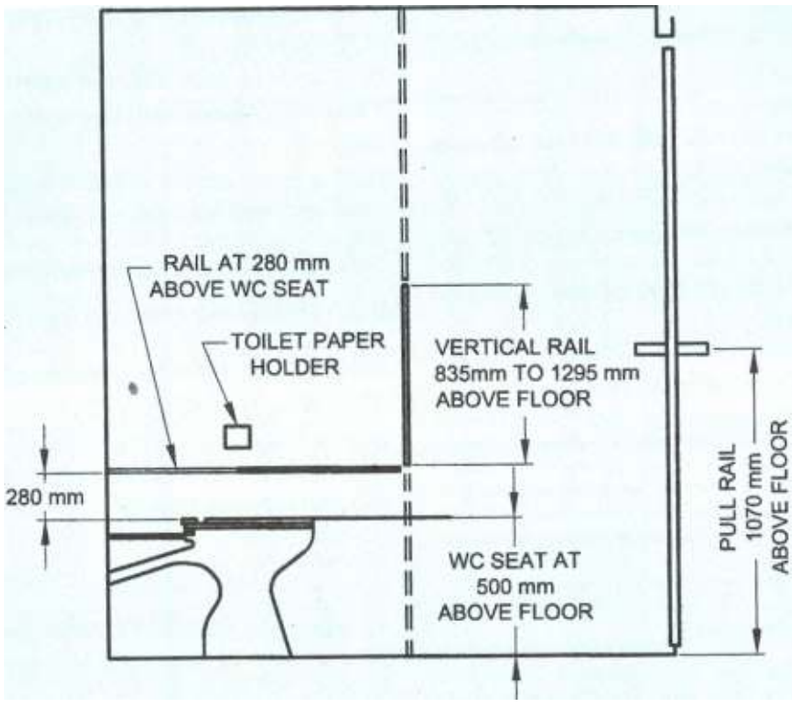

D-3.8.2 Drinking water fountains or water coolers shall be hand-operated, or hand and foot-operated.

D-3.8.2.1 Conventional floor mounted water coolers may be convenient to individuals in wheelchairs if a small fountain is mounted on the side of the cooler 800 mm above the floor.

D-3.8.2.2 Fully recessed drinking water fountains are not recommended.

D-3.8.2.3 Drinking water fountains should not beset into an alcove unless the alcove is wider than a wheelchair.

D-3.9 Public Telephones
An appropriate number of public telephones should be made accessible to and usable by the physically disabled.

NOTE — The conventional public telephone booth is not usable by most physically disabled individuals. There are many ways in which public telephones may be made accessible and
usable. It is recommended that architects and builders confer with the telephone companies in the planning of the building or facility.

D-3.9.1 Such telephones should be kept so that the dial is placed at minimum 1 200 mm from floor and the handset may be reached by individuals in wheelchairs.

D-3.1O Handrails
Handrails are used as a vocational and mobility aid by blind and visually impaired people, and as a support for people with mobility impairments. The handrail should be securely fitted to the wall to withstand heavy pressure. Handrails should turn in towards the wall at either end.

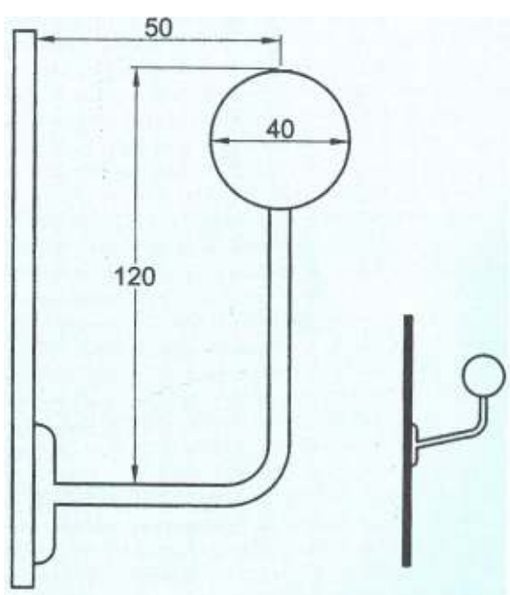

All dimensions in millimetres.

FIG. 21 FIXING OF HAND RAIL

D-3.1O.1 Handrails should be approximately 900 mm from the floor. The rail should be easy to grip, having a circular section with a diameter of approximately 40 mm and fixed as shown in

D-3.1O.2 To aid identification, the color of the rail should contrast with the wall behind.

D-3.11 Elevators
In a multi-storey building, elevators are essential to the successful functioning of physically disabled individuals. They shall conform to the requirements given in D-3.11.1 and D-3.11.2.

D-3.11.1 Elevators shall be accessible to, and usable by the physically disabled on the level that they use to enter the building, and at all levels normally used by the general public.

D-3.11.2 Elevators shall allow for traffic by wheelchairs (see also D-3.3).

D-3.12 Controls
It is advantageous for wheelchair users if controls are placed at low level. For visually impaired people, they should be at eye-level.

D-3.12.1 To enable wheelchair users to reach controls while not placing them too low for visually impaired people, controls should be in the zone $00 mm to 1200 mm from the floor. It is advantageous if controls in, for example, lifts are placed at an angle of approximate y 45° to the wall so that they are easier to read and operate. To cater for wheelchair users, controls should be placed not less than 400 mm from room comers. All the power and electric points should be placed at one metre above the floor level and should not project outside walls.

D-3.12.2 Again, to cater for visually impaired people, controls should be colour-contrasted with backgrounds. Information should preferably be in relief for tactile reading.

D-3.12.3 To aid operation for people with impaired co-ordination or impaired vision, switches, etc, should have large push plates.

D-3.12.4 Controls for powered door openers to hinged doors should be located so that the doors do not conflict with wheelchairs, sticks, walking aids, etc.

D-3.12.5 To facilitate operation for people with limited strength in arms and hands, handles should be easy to grip and turn.

D-3.13 Identification
Appropriate identification of specific facilities within a building used by the public is particularly essential to the blind.

D-3.13.1 Raised letters or numbers shall be used to identify rooms or offices.

D-3.13.2 Such identification should be placed on the wall, to left of the door, preferably at a height of 1500 mm from the floor.

D-3.13.3 Doors that are not intended for normal use, and that might prove dangerous if a blind person were to exit or enter by them, should be made quickly identifiable to the touch by knurling the door handle or knob (see Fig. 22).

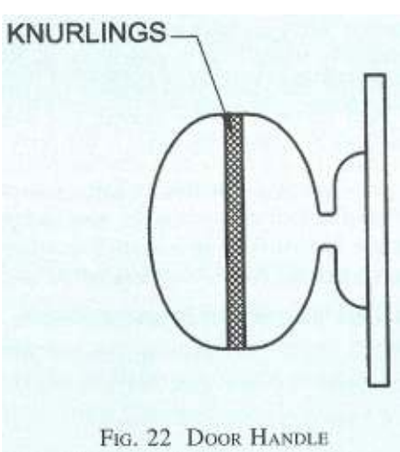

FIG. 22 DOOR HANDLE

D-3.14 Warning Signals

D-3.14.1 Audible warning signals shall be accompanied by simultaneous visual signals for the benefit of those with hearing disabilities.

D-3.14.2 Visual signals shall be accompanied by simultaneous audible signals for the benefit of the blind. To assist blind people, lettering and symbols on signs should be in relief for tactile reading.

D-3.14.3 Signs should be designed and located so that they are easy to read. For visually impaired people, signs should preferably be at eye-level and it should be possible to approach them closely. Text and symbols should be color-contrasted with the background. The letters should not be less than 12 nun high.

D-3.14.4 Signs should be well illuminated and surfaces should not cause mirroring or reflections. Signs should not be behind glass or similar materials.

D-3.14.5 Information based on colour codes only should be avoided; colorblind people may find them difficult to understand.

D-3.15 Work Bench
This should be at least 800 mm wide, 600 mm deep and 650 mm to 700 mm high. For wheelchair users, the convenient height of work tops is between 750 mm and 850 mm; flexible provision is preferred. Further, for wheelchair access to a work bench, wash basin or table, a clear space for knees and footrests is needed.

D-3.16 Hazards
Every effort shall be exercised to obviate hazards to individuals with physical disabilities.

D-3.16.1 Access panels or manholes in floors, walks, and walls may be extremely hazardous, particularly when in use, and should be avoided.

D-3.16.2 When manholes or access panels are open and in use, or when an open excavation exists on a site, particularly when it is in proximity of normal pedestrian traffic, barricades shall be placed on all open sides, at least 8.5 m from the hazard, and warning devices shall be installed in accordance with D-3.14.2.

D-3.16.3 Low-hanging door closers that remain within the opening of a doorway, when the door is open or that protrude hazardously into regular corridors or traffic ways when the door is closed, shall be avoided.

D-3.16.4 Low-hanging signs, ceiling lights, and similar objects or signs and fixtures that protrude into regular corridors or traffic way shall be avoided. A minimum height of 2.1 m measured from the floor is recommended.

D-3.16.5 Ramps shall be adequately lighted. D-3.16.6 Exit signs shall be in accordance with good practices [3(5)].

D-3.16.7 Equipment and materials causing allergic reactions should as far as possible be avoided in dwellings and buildings.

D-4 DESIGNING FOR CHILDREN
The dimensions given in this Annex are for adults of average stature. In designing buildings for use by children, it may be necessary to alter some dimensions, such as, height of handrails, in accordance with accepted standards [3(6)].

D-5 For additional information regarding other facilities and conveniences required in buildings meant for use of physically challenged, reference may be made to accepted standards [3(7)].

ANNEXURE – VI
(Rule-15.a.vii)

GOVERNMENT OF ANDHRA PRADESH
ABSTRACT

Conservation and Harvesting of Rain water Structures in construction of buildings in all Municipal Corporations / Urban Development Authorities / Municipalities - Orders - Issued.

MUNICIPAL ADMINISTRATION & URBAN DEVELOPMENT (M1) DEPARTMENT

G.O.Ms.No.350 M.A., Dated:9th June,2000

Read the following:-

1. G.O.Ms.No.422 M.A., dt.31.07.1998.
2. G.O.Ms.No.423 M.A., dt.31.07.1998
3. G.O.Ms.No.611 M.A., dt.26.10.1999

* * *

ORDER:-

The ever increasing population and its increasing trend concentration in urban areas has a direct effect on the availability of water. The excess tapping of ground water and absence of its recharge has lead to depletion of ground water table to greater extent. This is evident from the increasing number of dry bore wells and digging of bore wells to a greater depth of every new bore well that is taken up. Most of the urban area is in their paved or covered by buildings leaving little scope for charging the ground water during the monsoons.

Keeping in view the above, provisions have already been made in G.O.s 1st to 3rd read above that it is mandatory to provide required facilities land infrastructure for conservation and harvesting of rain water in all Group Housing and commercial

Further there have been number of representations and provisions from environmentalists to make it mandatory the provisions of such rain water harvesting structure of all types or buildings including residential buildings as large parts of the towns are covered by residential layouts.

Government after careful examination of the matter decided to make the provisions for rain water harvesting contained in the third read above as mandatory for all categories of proposed buildings including residential buildings on the interest of rural public. Accordingly the following orders issued.

1. The Competent Authorities i.e., Director of Town and Country Planning, Vice Chairman of Urban Development Authorities, Commissioners of Municipal Corporations/Municipalities shall insist for facilities and infrastructure for conservation and harvesting rain water in all layouts and sub division for sanctioning the same.
2. Every building proposed for constructing plots having extent of 300 Sq. Mtrs. and above shall be provided with required facilities and infrastructure for conservation and harvesting of rain water viz. Part-A is compulsory and part-B & C or D is optional.
3. All existing buildings in Municipalities / Municipal Corporations shall construct rainwater harvesting the structure within a period of one year from the issue of this G.O.

Percolation pits or Trenches

The paved surface around the building shall have percolation pits or Trenches or combination of pits & Trenches in such a way that total volume of such structure shall not less than 6 cum for each 100 Sq.Metres of roof top area and multiples there on. Depending on the geomorphological and topographical condition, the pits can of size 1.2m wide x 1.2 m long x depth of 2 to 2.5 m. The trenches can of width of 0.6 x length of 2 to 6m x depth of 1.5 to 2.0 meters terrace water shall be channeled, to pits and or trenches. The pits shall be back filled with filter media comprising of the following materials.

i) 40 mm Road metals the bottom layer upto 50% of the depth.
ii) 20 mm road metal as the lower middle layer upto 20% of the depth.
iii) Course sand as the upper middle layer upto 20% of the depth.
iv)
v) Top 10% of the Pits/Trenches will be empty and a splash pad is to be provided in such a way that roof top water falls on the splash pad.
vi) Brick masonry wall is to be constructed and cement mortar plastered on the exposed surface. The depth of wall below the ground shall be in such a way that the wall prevents loose soil going into pits/Trenches. The projection of the all above ground could be minimum of 15 cm.
vii) Perforated concrete slabs shall be provided on the pits and trenches.

Terrace water collection

The terrace shall be connected to a sump or the wall through a filtering tank by PVC pipe. A value system shall be incorporated to enable the first part of the rain water collected to discharge out to the ground, if it is dirty.

A filtering tank measuring 1mx1mx1m meter can be constructed near sump. The tank can divided by a potion slab and the one part shall be filled by fine sand and by course sand. The bottom portion of the tank should have a slope to avoid stagnation of water.

Open ground;-

Whenever there is a open ground, the top soil shall be removed over a portion of the ground and back filled with course sand to allow percolation of rain water.

(or)

Any other methods proved to be effective in conservation and harvesting of rainwater may be adopted each and every construction taken up.

The Commissioners of all Urban Local Bodies shall open a "rain water harvesting cell" to motivate existing building owners to implement the scheme before the arrival of monsoons and take up area wise interactive programme at regular intervals to educate the people on the importance of Ground water recharging and Rain water Harvesting / Water Conservation.

Failure to follow the above orders by the concerned and for penal action u/s 41 of A.P. Urban Development Authority Act,1975 or U/s 596 & 597 of Hyderabad Municipal Corporation Act, 1955 or U/s 340 of A.P. Municipalities Act, 1965 as the case may be.

A copy of this order is available on the interest and to be accessed of the address http://apts.gov.in/apgos.

(BY ORDER AND IN THE NAME OF THE GOVERNOR OF ANDHRA PRADESH)

N.S.HARIHARAN
PRINCIPAL SECRETARY TO GOVERNMENT

ANNEXURE – VII
(Rule-3(i)
LIST OF MAJOR / HISTORIC TEMPLES WHERE IN RESTRICTION ON BUILDING ACTIVITY

Sl.No.	Name of the District	Name of the Town	Name of the Temple
1	2	3	4
1	Ananthapur	Kadiri	Sri Lakshmi Narasimha Swamy Temple
2	Ananthapur	Puttaparthi	Sri Satya Sai Prasathi Nilayam
3	Ananthapur	Tadipatri	Sri Bugga Rama Lingeswara Swamy Temple
4	Ananthapur	Tadipatri	Sri Chintala Venkataramana Temple
5	Chittoor	Kanipakam	Sri Varasiddi Vinayaka Swamy Temple
6	Chittoor	Srikalahasthi	Sri Kalahasthiswara Temple
7	Chittoor	Tirumala	Sri Venkateswra Swamy Temple
8	Chittoor	Tirupathi	Sri Govindaraja Swamy Temple
9	Chittoor	Tirupathi	Sri Kodandarama Swamy Temple
10	Chittoor	Tiruchanur	Sri Padmavathi Ammavari Temple
11	Chittoor	Srinivasa Mangapuram	Sri Kalyana Venkatewara Swamy Temple
12	East Godavari	Annavaram	Sri Veera Venkata Satyanarayan Swamy Temple
13	East Godavari	Draksharaama	Sri Bheemeswara Swamy Temple
14	East Godavari	Samalkot	Sri Someswara Swamy Temple
15	Guntur	Amaravathi	Sri Amareswa Swamy Temple
16	Guntur	Mangalagiri	Sri Pankala Laxmi Narasimha Swamy Temple
17	Karimnagar	Vemulawada	Sri Raja Rajewara Swamy Temple
18	Khammam	Bhadrachalam	Sri Seeta Ramachandra Swamy Temple
19	Krishna	Vijayawada	Sri Durga Malleswara Swamy Vari Devasthanam
20	Kurnool	Mahanandi	Sri Mahanandeswara Swamy Temple
21	Kurnool	Srisailam	Sri Bramarambika Mallikarjuna Swamy Temple
22	Nalgonda	Yadagirigutta	Sri Lakshminarasimha Swamy Temple
23	Nellore	Nellore	Sri Talpa Ranganayaka Swamy Temple
24	Nizamabad	Basara	Sri Gnana Saraswathi Temple
25	Prakasam	Markapur	Sri Chennakesava Swamy Temple
26	Rangareddy	Chilkur	Sri Balaji Temple
27	Srikakulam	Arasavelli	Sri Suryanarayana Swamy Temple
28	Vishakhapatnam	Simhachalam	Sri Varaha Narasimha Swamy Temple
29	Warangal	Palampet	Sri Ramappa Temple
30	Warangal	Warangal	1000 Pillars Temple
31	Warangal	Warangal	Sri Badhrakali Temple
32	West Godavari	Dwaraka Tirumala	Sri Venkateswara Swamy Temple
33	West Godavari	Gunupudi Bhimavaram	Sri Someshwara Janardhana swamy Temple
34	West Godavari	Palkol	Sri Ksheera Rama Lingeswara Swami Temple
35	YSR Kadapa	Kadapa	Sri Venkateswara Swamy Temple

ANNEXURE – VIII
[Rule-17(d)(ii)]

PROFORMA FOR TRANSFARABLE DEVELOPMENT RIGHT (TDR) REGISTER

Sl. No	Location of site surrendered and Name of the person against to whom TDR issued including date & TDR No.	Extent of TDR granted (in Sq. yds)	Name & Address of the person utilized and extent utilized	B.A.No. & utilization Details	Whether the property surrendered is vested with Municipal Corporation/ Municipality/UDA or not (details)	Export values as on the date of utilization	Import value as on the date of utilization	Rate & Balance to be utilized	Remarks *TDR surrender details
1	2	3	4	5	6	7	8	9	10

ANNEXURE – IX
[Rule-29(a)]
……(ULB)
REGULATIONS FOR REGISTRATION OF LICENSED BUILDER / REAL ESTATE DEVELOPER / FIRM

1. Short Title, extent and applicability:

1.1. **Short Title**: These regulations may be called "**Regulations for Builder / Real Estate Developer / Firm License of……(ULB)**".
1.2. **Extent**: These regulations shall apply to the entire area of .....(ULB)
1.3. **Applicability**: These regulations shall apply to the building activity in accordance with the provisions of A.P. Building Rules-2012 and as amended from time to time.

2. Definitions:
For the purpose of these regulations, the following definitions shall have the meaning indicated against each:

2.1. ***'Act'*** means, ……(the relavent act) and as amended from time to time.
2.2. ***'Approved'*** means, approved by the authority having jurisdiction.
2.3. ***'Authority'*** having jurisdiction means, the Commissioner or an officer authorized by him to administer these regulations.
2.4. ***'Commercial complex'*** means, the commercial building proposed for a plot area having more than 300 Sq.mts and above 10 Mtrs height.
2.5. ***'Licensed Builder / Real Estate Developer'*** means, the Builder / Real Estate Developer / Firm who has been licensed by the Authority.

3. General Requirements for License:
3.1. Person who applies for license as a Builder shall be a graduate in Architecture or Civil Engineering or in Construction Management or equivalent educational qualifications or 5 years of experience as Class – II Civil Contractor.

or

3.2. A Company which applies for a License as a Real Estate Developer / Firm shall submit the application by an authorized qualified person on behalf of the Company and the company should employ a qualified person as prescribed in Rule 3.1 and submit the particulars of the person appointed and such company shall be registered.

or

3.3. The Builder / Real Estate Developer who is in the profession of construction activity as on date of notification of revised building rules, is also eligible for license provided that he shall submit the proof of Income Tax Assessment for the past five years that he is engaged in the profession of Builder / Real Estate Developer. A copy of PAN Card shall be submitted along with the application.

4. The Licensing Authority and Procedure for obtaining License:
4.1. The Commissioner or an officer authorized by him is the authority for issuing the license for practicing the profession of Builder / Real Estate Developer / Firm.
4.2. The fee for License shall be as per the Schedule of Rates as approved by the Municipal Corporation from time to time.
4.3. The format of application for obtaining license as Builder / Real Estate Developer / Firm is as at Form – 1. The applicant shall apply in the prescribed form duly enclosing the required copies of certificates and duly paying the prescribed fee.
4.4. Form of Certificate of License for Builder / Real Estate Developer / Firm is as given at Form – 2.
4.5. A register of licensed Builder / Real Estate Developer / Firm shall be maintained by the ……(ULB) and up to date list of such licensed Builder / Real Estate Developer / Firm showing the addresses and the period for which the licenses are valid shall be kept for inspection in the office of the ……(ULB) during the office hours.

5. Conditions for issuing License:
5.1. The Authority has the right to cancel the license for contravention of any of the provisions of the Act, Rules or Bye-laws framed there under or for contravention of any of the conditions of the license or for failure in discharging the duties and responsibilities as prescribed in these regulations.
5.2. In case the license is cancelled, he is not eligible for obtaining a fresh license and for practicing as a Builder / Developer / Firm for a period of three (3) years from the date of cancellation.
5.3. If for any reason the license is cancelled, the licensed Builder / Real Estate Developer / Firm shall return the license to the Authority within 24 hours of such cancellation.
5.4. Every application for the renewal of license shall be submitted to the ……(ULB) together with a renewal fee as prescribed from time to time and shall be accompanied by the license in respect of which the renewal is required.

6. Duties and Responsibilities of Builder / Real Estate Developer / Firm:
6.1. It shall be incumbent on the Builder / Real Estate Developer / Firm to cooperate with and assist ……(ULB) in carrying out and enforcing strictly the provisions of Master Plan / Zonal Development Plan, Zoning Regulations and Development Control Rules of ……(ULB) and other rules made under the provisions of relevant Acts from time to time.
6.2. Builder / Real Estate Developer / Firm is entitled to execute all types of projects and submit the Building applications to ……(ULB) for obtaining building permissions.
6.3. A licensed Builder / Real Estate Developer / Firm shall not associate himself with any construction not authorized or licensed by the ……(ULB) where such authorization or license is required under the provisions of the Act or Rules or any Bye-laws framed there under.
6.4. The licensed Builder / Real Estate Developer / Firm shall not do anything prejudicial to public interest and the objectives for which he is licensed or be a party to any evasion or attempted

evasion of the provisions of the relevant statute, and the Rules, Bye-laws and Regulations made there under ……(ULB) and for the time being in force.

6.5. Copy of the certificate of License shall be submitted along with Building application. The license number and the period of validity of the license shall be incorporated on the building plans.

6.6. Every licensed Builder / Real Estate Developer / Firm shall in submitting the plans show correct details and dimensions, levels and give correct information in respect of such plans or building or work for which the proposed execution.

6.7. It shall be incumbent on the licensed Builder / Real Estate Developer / Firm to counter sign on Notarized Affidavit of the Owner of the property/GPA holder and submit along with the Building Application for handing over the prescribed floor area of the proposed construction to the Sanctioning Authority as prescribed in the Rules from time to time.

6.8. The sale or disposal of such built up area under the said Notarized Affidavit, lease and registration of such buildings shall be allowed by the Registration Authority only after an Occupancy Certificate is obtained from the ……(ULB).

6.9. In case of any violation of building constructions, it shall be removed by the owner / Builder / Real Estate Developer / Firm within the stipulated time on receipt of the statutory Notice of ……(ULB).

6.10. Upon failure to comply with the direction of the .....(ULB) to remove violations, violated portion of the building will be removed summarily and the handed over portion of the building will be disposed off in public auction by ……(ULB) and further action on licensed Builder / Real Estate Developer / Firm shall be initiated, which includes cancellation of license and debarring from the profession for a period of three (3) years.

6.11. It is a prerequisite that every Builder / Real Estate Developer / Firm is required to submit copy of the agreement executed with Consulting Architect / Structural Engineer for execution of the project along with the building application wherein a condition of the agreement shall be incorporated that the consultants will offer their services to builder till completion of work and obtaining of Occupancy Certificate. In no case the construction should take place without the supervision of the Licensed Technical Personnel.

7. REQUIREMENTS TO BE SUBMITTED FOR OBTAINING BUILDERS / REAL ESTATE DEVELOPERS / FIRM LICENSE

In case of Builder

(1) Certificate of Qualification of Degree.
B.E (Civil) / B.Tech. (Civil) / B. (Arch) (duly attested by Gazetted Officer)

(2) Copy of PAN Card (duly attested by Gazetted Officer)

(3) Photographs (3 Nos) of the Authorized Person

(4) Experience Certificate (Optional)

In case of Real Estate Developer / Firm

(1) Certificate of Qualification of Degree of the authorized person of the Firm or Employee of the Firm (as per Rule 3.1) (duly attested by Gazetted Officer)

(2) Authorization Letter on behalf of the Company certifying the Person / Employee of the firm.

(3) An Affidavit on Rs.100/- Non-judicial Stamp Paper by the Employee (Engineer) of the firm (proforma enclosed)

(4) Incorporation Certificate of the Company / Firm Registration Copy (duly attested by Gazetted Officer).

(5) Copy of Company PAN Card and Income Tax Returns filed by the Company (for the past five years duly attested by Gazetted Officer)

(6) Partnership Deed of the Firm / Memorandum & Articles of Association of the Company (duly attested by Gazetted Officer)

(7) NOC from remaining Partners of the Firm / Directors of the Company for the person represented.

(8) Photographs (3 Nos) of the Authorized Person.

(9) Experience / Previous Projects Done (Optional)

(Fee prescribed by the .....(ULB) with minimum of Rs.10,000/- for (5) years through D.D in favour of Commissioner, ...(ULB))

Sd/-
COMMISSIONER
……(ULB)

FORM-1

APPLICATION FORM FOR LICENCE OF BUILDER / REAL ESTATE DEVELOPER / FIRM	
To The Commissioner, …….(ULB)	AFFIX LATEST PHOTOGRATH

Sir,

I, The understand request that may name / firm may kindly be enrolled as licensed Builder / Real Estate Developer / firm.

1	Applied for	BUILDER / REAL ESTATE DEVELOPER / FIRM
2	Application for License	FIRST TIME / RENEWAL
3	Name of the Applicant/ Firm (in block letters)	
4	Name of the Authorised Person: (in case firm) (in block letters)	
5	Father's Name	
6	Full Address of the applicant / FIRM	
7	Qualification (Academic and Technical)	
8	Experience	
9	Any other special qualification possessed Which requires consideration.	
10	Whether enclosed copies of the Income Tax Assessment as required on the regularization 3.3	
11	License fee details	
i.	Amount (Rs.)	
ii.	D.D.No.	
iii.	D.D.Date	
iv	Draw on	
12	If License intended for a firm, the following particulars of the technical employees shall be given along the certified copies of the qualification.	

Sl.No	**Name of the employee**	**Qualification**	**Designation**	**Signature**

Date…… Signature of the applicant

Encl: 1. Demand Draft
2. Proof of qualification
3. Copy of Income tax Assessment along with copy of PAN card
4. Experience Certificate
5. Passport size photographs 3 Nos

UNDER TAKING

(Notarized Under taking to be executed on Rs.100/- N.J. Stamp Paper)

I, …….. S/o, D/o, W/o …….. aged about ..... Years, R/o ……. Situated at …….. , ……..(ULB)
do hereby solemnly affirm and state that;

I, submit that I am aware about the provisions contained in the Regulations under rules in force for Builder / Real Estate Developer / Firm License of ……..(ULB)

I submit that, I possess the required qualification of Engineer as prescribed in Rule 3.1 of the Regulations for Builder / Real Estate Developer / Firm License and I am with my free consent working in the company …….., I, further undertake all the responsibility as a Civil Engineer of the Firm and will be responsible for all the projects done by my Firm. If any misrepresentation / violation on my supervision, I will be held personally responsible for any consequences aroused now and in future and the competent authority is at liberty to initiate any action upon me including cancellation of Builders License or any other action enforced by the .....(ULB).

Signed & Sworn before me on this day of ……

WITNESS:

1.

2.

DEPONENT

FORM-2

……..(ULB)
BUILDER / REAL ESTATE DEVELOPER / FIRM LICENSE

1.	**Reference No.**			Affix latest passport size photograph of the applicant or authorized person
2.	**License No.**			
3.	**Issued on**			
4.	**Valid up to**			
5.	**Name of the Builder / Real Estate Developer Firm**			
6.	**Father's Name**			
7.	**Applicant's Name**			
	Applicant's Address			
	Door No. / Flat No.			
	Road / Street			
	Locality / Mandal			
	City			
	District			
	PIN			
	Phone No.	Office		
		Mobile		

The Licensee shall comply and adhere to the conditions, duties and responsibilities as prescribed in the "**Regulations for Registration of Licensed Builder / Real Estate Developer / Firm of ……..(ULB)**".

Signature of Licensing Authority

Office Stamp

……..(ULB)

ANNEXURE – X
[Rule-29(b)]

COMPETENCE OF LICENSED TECHNICAL PERSONNEL

Every building / development work for which permission is sought under these rules shall be planned, designed and supervised by the registered professionals for carrying out various activities as given below.

I. **ARCHITECT:** The licensed architect shall be competent to carryout work related to Building Permit, as given below and shall entitled to submit.
a) All Plans and related information connected with building permit.
b) Structural details and calculations of building on plot up to 500sq.m and up to 3 Storeys or 13m Height.
c) Certificate of Supervision and completion for all buildings.

II. **ENGINEER:** The Licensed Engineer shall be competent to carryout the work related to building permit as given below shall be entitled to submit.

a) All plans and related information connected with building permit.
b) Structural details and calculations for building on plot up to 500sq.m and Up to 3 Storeys or 18m Height .
c) Certificate of Supervision and completion for all buildings.

III. **a) SURVEYOR / SUPERVISOR – 1:**
i. All plans and relate information connected with building permit on plots up to 200 Sq. Mtrs. And up to two storeys. And
ii. Certificate of Supervision of Buildings on plots up to 200sq.m and up to two storeys.
b) SURVEYOR / SUPERVISOR – II:
i. All plans and related information connected with up to 50sq.m Built up area and upto two storeys, and
ii. Certificate of Supervision for limits at (i) above

IV. **STRUCTURAL ENGINEER**: Structural Engineers shall be competent to submit the structural details and calculations for all building and supervision.

In the case of complicate buildings and sophisticated structures, as decided by the Authority which are within the horizontal areas and vertical limits and shall be designed only by Structural Engineers.

V. **TOWN PLANNER** :
The Licensed Town Planner shall be entitled to submit
a) All Plans or related information connected with development permit of all areas; and
b) Certificate of Supervision for development of land of all areas.

DUTIES AND RESPONSIBILITIES OF LICENSED TECHNICAL PERSONNEL

a) It will be incumbent on every Licensed Technical Personnel, in all matters in which he/she professionally consulted or engaged, to assist and co-operate with the Municipal Commissioner and other Municipal Officers in carrying out and enforcing the provisions of the Act and of any Bye-laws for the time being in force under the same.

b) Every Licensed Technical Personnel shall in every case in which he/she may be professionally consulted or engaged, by responsible, so far as his/her professional connection with such case extends, for due compliance with the provisions of the Act and of any regulations for the time being in force under the said Act, or such of them as may being in force under the said Act, or such of them a may respectively be applicable to the circumstances of the particular case and in particular it will be obligatory on him/her to satisfy himself / herself that a qualified and competent Mistry or Inspector of Works in constantly employed and present on the work to supervise the execution of all works and to prevent the use of any defective material therein and the improper execution of any such work.

c) In every case in which a Licensed Technical Personnel is professionally concerned in connection with any building or work upon any premises, in respect of which a right to require as set-back has accrued or is about to accrue to the Commissioner under the Provisions of the said Act, or any of them, it will be incumbent on such Licensed Technical Personnel to ascertain whether “the regular line of the Street” has been prescribed and whether any portion of the said premises is required for the street or under any presence whether, be a party to any evasion or evasion of the set-back (if any) that may be required.

d) In every case in which a Licensed Technical Personnel professionally concerned in connection with any building or work upon any premises designed or intended to be used or any purpose in respect of which the written permission or license of the Commissions, is prescribed by the said Act as a necessary condition to the establishment or use of such premises for such purpose, it shall be incumbent on such Licensed Technical Personnel, so far as his professional connection with such case extents, to see that all conditions prescribed

by the said Act, or by any Bye-law of the time being in force there under, in respect of premises designed or intended to be applied to such use, are duly fulfilled or provided for.

e) A Licensed Technical Personnel shall not carry out work in connection with any building or other erection on a plot of land leased or agreed to be leased by the ULB / UDA in contravention of any term or condition of the lease or agreement for lease

f) When a Licensed Technical Personnel ceases to be in the employment for the development work, he shall report the fact forthwith to the Authority.

……(ULB)
(TOWN PLANNING SECTION)

To The Commissioner, …….(ULB)	AFFIX LATEST PHOTOGRATH

Sir,

Sub:- Application for issue of License for practicing as …….

I, the undersigned request that my name may kindly be enrolled as Licensed / Empanelled Structural Engineer, Architect, Engineer. Town Planners and Surveyors / Supervisor. I furnish herewith the following particulars:

12	Category of License	
13	Full name of the applicant	
14	Father Name	
15	First License No. & Year [if any]	
16	Qualification [Academic & Technical]	
17	Experience	
18	Address in full	
19	Office Phone	
20	Residence Phone	
21	Mobile	

I am well acquaints with all the provisions contains in A.P. Building Rules-2012 in respect of planning and permission and assured to adhere the same strictly without giving any scope of violation or deviation.

22	License fee details	
i.	Amount (Rs.)	
ii.	D.D.No.	
iii.	D.D.Date	
iv	Bank	
v	Branch	

Date…… Signature of the applicant

<u>The following should be enclosed</u>:

a. Specimen signature [12 Nos.]
b. Demand Draft for prescribed licence fee : :

c. New Enrollment Fee security Deposit : [Above licence fee and Rs.2000/- per Engineer / Structural Engineer/Town Planner]

[Not applicable for Architects registered with Council of Architecture and they are entrusted in empanelment and inclusion of the .....(ULB)]

d. Xerox copy of previous License, if any.
e. Recent Photographs [3 Nos.]
f. Attested copy of Degree / Diploma Certificate.
g. Certificate of Registration with Council of Architecture with upon date fees paid.

…….(ULB)

Licence No. ……..…TP/.....(ULB)/……Year:

Sri / Kum / smt. …….. ..…. Residing / Office at…… Hyderabad. to be Licensed Structural Engineer / Architect / Engineer / Town Planner / Surveyor / Supervisor for a period from ……to …….

The license is not transferable to any other person and should be produced by the Licensee whenever required to do so by the authority.

The Licensee is bound to comply with all the conditions and duties of Licensed Technical Personnel.

Any failure on the part of license to abide by or comply with any of the conditions will entail not only a fine imposed by the Commissioner but also for recovery of any loss occasioned to corporation by anything done or omitted to be done by Him / Her security deposit, and also cancellation of this License. Further He / She will be liable for all the necessary consequences of penal action, if any, instituted against Him / Her including any civil liability.

PHOTO

Specimen Signature of the Licensee

Date:……..

Signature of the Licensing Authority
(Office Stamp)

Note: Xerox Copy of this license shall be enclosed to every building application submitted. Please see competence and duties of Licensed Technical Personnel.

ANNEXURE –XI

[Rule.17(d)(vi)]

DISPOSAL OF TDR FOR UTILISATION

Agreement between Transferor & Transferee

(To be notarised on Rs.*100/-* NJS paper)

Whereas …….. (ULB) in consideration of the provision contained in A.P. Building Rules-2012. for award of Transferable Development Right (TDR) certificate for the sites required for public purpose / implementation of Master Plan, awarded TDR certificate for the site situated in Sy.No…….of ……..……. (v)/ Block/ Ward in the name of……vide TDR certificate No. ……..... issued on dated for an extent of …… Sq.m., after vesting the said site / property in ……(ULB);

Whereas there is provision in Transferable Development Right (TDR) for disposal and utilisation anywhere in ……..(ULB) and as Sri…….. S/o……., (Transferor) Resident of ……. has offered to utilise the TDR certificate for construction purpose at agreeable terms and conditions for the said TDR;

I ……hereby dispose an extent of…… Sq.m., to Sri…….. S/o……..

(Transferee) duly retaining……Sq.m., with rights to utilise/ dispose at my convenience.

Both the parties hereby agree to the terms and conditions applicable to utilisation / disposal of TDR certificate.

TRANSFEROR TRANSFEREE

WITNESS: 1) WITNESS: 1)

2) 2)

ADDRESS

CELL NO.

ANNEXURE –XII

[Rule.24(d)]

GUIDELINES FOR NOMINATION OF SENIOR PRACTICING ARCHITECT /PLANNER

1. The concerned ULB shall call for an application from the qualified Architects duly publishing in two local News papers and among them one shall be a Telugu News paper.
2. Time shall be given at least 15 days for applying from the date of publication.
3. The application shall contain the information as in the application form given below.
4. The validity of such membership will be 3 years only.
5. The proposals in full shape shall be submitted to the Director of Town and Country Planning for approval.

APPLICATION FOR NOMINATION AS MEMBER IN TECHNICAL CLEARANCE COMMITTEE IN RESPECT OF HIGH RISE BUILDINGS

1. Name of the Applicant :
2. Father / Husband Name :
3. Residential Address :
4. Office Address :
5. Present Occupation :
6. Experience :
7. Details of the Projects handled
   In respect of Multi Stored buildings :
8. Registration No (COA/ITPI) :
9. Other Information, if any :

Signature of the Applicant

NOTE : The attached copies shall be furnished as proof of above information.

APPENDIX - I

…………………..(ULB)

BUILDING PERMISSION APPLICATION FORM

FILE No.			**Date:**	**___.___.______**

To,
The Commissioner,
……………………………………………..(ULB),

……………………………………………

(Use CAPITAL LETTERS only)

A	**ADDRESS OF THE APPLICANT**								
1	Name								
2	Door No./Flat No.								
3	Road/Street								
4	Village & Mandal								
5	City/ Town								
6	District		PIN						
7	Phone / Mobile No.								
8	e-mail								

B	**LOCATION OF THE PROPOSED SITE**	
1	Plot Nos.	
2	Sanctioned Layout No. / LRS No.	
3	Survey No./Village	
4	Premises / Door No.	
5	Road/ Street	
6	Ward No./ Block No.	
7	Locality	
8	Circle/ Division	
9	City/ Town/ District	

C	**DETAILS OF THE PROPOSED CONSTRUCTION**					
1	Site Area (in Sq. m)	(a) As per Documents	(b) As per submitted Plan	(c) Road Widening Area	(d) Net Area	
2	No. of Floors	Cellar	Stilt	Ground	Upper Floors	Total
3	Floor Area (in Sq.m)					
4	Parking floor area					
5	Use of the Building	Individual Residential/ Group Housing/ Commercial/ Institutional/ Row Housing / Others (specify) _				

D	DETAILS OF THE LICENSED TECHNICAL PERSONNEL:		
Sl. No	Name	Address	License No.
1	…… Builder / Developer		
2	…… Architect/ Engineer/ Surveyor		
3	…… Structural Engineer		

CERTIFICATE

I/ we declare that I am / we are the absolute/ owner/ owners/ lessee of the land on which I/we intend to erect the Building and am / are enclosing copies of relevant document of ownership/ lease certified by Magistrate/ Notary public/ a Gazetted Officer authorized by the Commissioner in this behalf.

I/ we have gone through the Building Regulations made under the provisions of the A.P. Building Rules-2012 and have satisfied myself/ ourselves that the site and building plans are in accordance with provisions contained therein.

Sl.No.	Name of Owner / Developer / License Technical Personnel	Signature
1	..... Owner / Owners / Lessee / Authorised Agent	
2	..... Builder / Developer	
3	..... Architect/ Engineer/ Surveyor	
4	..... Structural Engineer	

APPENDIX –II

Notarised under taking to be executed
On Rs.100/- N.J. Stamp Paper

ROAD WIDENING UNDERTAKING

This undertaking is executed on this the ……..... day of …….…… by……..…… W/o……R/o……. Situated at …….. herein after called the 1st party which term shall include their legal heirs, successors, assigns and tenants in favour of the Commissioner, ……(ULB), herein after called the 2nd party which term shall include his representatives, agents, officials, staff of ……(ULB).

WHEREAS, the 1st party has applied to the 2nd party for permission to construct residential / commercial…… consisting of ……..…… ……floors at Plot / H.No.…… situated ……. ……. WHEREAS, the 2nd party arty has put in a condition that:

The land and the existing structures are/is getting effected in road widening throughout the frontage of the plot admeasuring……Sq.m should be surrendered to the ……(ULB) for road widening before releasing the approved plan free of cost without claiming any compensation towards the land and the structures existing on the road widening site.

The first party in token of accepting the above conditions hereby undertake that they are herewith handing over the physical possession of the strip of land to the Commissioner, ……(ULB) on this day of …… at free of cost before commencing the construction without claiming any compensation towards land and structures. The above undertaking is executed by me with free will and due consciousness for having obtained permission for the construction of residential / commercial building in the Plot / H.No. …… situated at ……

Witness: **Parties of 1st part**

1) 1)

2)

Sworn & signed before me.

Notary

APPENDIX – III

Notarised under taking to be executed
On Rs.100/- N.J. Stamp Paper

Declaration – cum – under taking by the Owner

I / We ……..., S/o., D/o., W/o.,…… ……, aged …….., Occupation …… R/o…….. do hereby declare and solemnly affirm as follows:

That I/ We are the owners of the Site Plot/H.No……, situated at……. bearing Sy.No..……, corresponding to T.S.No……..., Block No. ……, Wd.No……..... of ……..Village of…….. Mandal ……. District admeasuring ……Sq.m. and that we have applied for the building permission for construction of Residential /Commercial Buildings consisting of …… at the above said premises / site.

That I am / we are taking up the construction of the said building by myself / ourselves and that I am / we are not entrusting the work to any builder or any other person.

I / We hereby under take that I am / We are solely responsible for execution of the building construction work according to plan sanctioned by ……(ULB), under the strict supervision of the Architect, Structural Engineer, and Site Engineer engaged by me / ourselves for the purpose.

Hence this declaration cum under taking.

In witness therefore, I / We execute this on this the _____ day of _____.

Place:

DEPONENT

Address:

Witness

1)

2)

APPENDIX – IV

Notarised under taking to be executed
On Rs.100/- N.J. Stamp Paper

Declaration – cum – Under Taking by Owner and Builder

I / We ……..., S/o., D/o., W/o.,…… ……, aged …….., Occupation …… R/o…….. do hereby declare and solemnly affirm as follows:

That I/ We are the owners of the Site at Plot/H.No……, situated at…… bearing Sy.No.……, corresponding to T.S.No……..., Block No. ……, Wd.No……..... of ……..Village of…….. Mandal ……. District admeasuring ……Sq.m. and that we have applied for the building permission for construction of Residential /Commercial Buildings consisting of …… at the above said premises / site.

That I / we have entrusted the Construction of the said building to ……Builder / Construction firm, the details of which are as given below:

Name of the Builder

Construction Firm ……

Represented by ……

Present Address ……

Permanent Address ……

Regd. No. if any ……

That I am / We are also jointly and severely responsible along with Builders, Architect, Structural and Site Engineer, for the execution of building according to sanctioned plan.

That I am / We are fully aware of the provision of the A.P. Building Rules-2012 and I / We undertake to abide by the same.

DEPONENT
(Owner)

I / We being individual / firm / company / Society / represented by ……as…… address ……. have been entrusted to construct the building consisting of …… for …… purpose in P.No. …… situated at …… by the owners Sri. / Smt. ……. On…… by virtue of a Regd. Development Agreement (copy of which is enclosed herewith).

We hereby undertake to carryout and complete the construction strictly according to the plan sanctioned by …… (ULB).

We are jointly and severely responsible for the execution of building according to sanctioned plan along with owners and Architect, Structural Engineer & Site Engineer engaged by us for the purpose for the purpose of supervision.

We are fully aware of all the provisions of A.P. Building Rules-2012 and hereby undertaking to abide by the same.

Hence this declaration cum under taking.

In witness therefore, I / We execute this on……day of…….20….

DEPONENT

1. Builders

2. Owners

<u>Witness:</u>

1)

2)

Signatures of the Parties of 1st part

1)

2)

Sworn & signed before me.

Notary

APPENDIX – V

Notarised under taking to be executed On Rs.100/- N.J. Stamp Paper

Under Taking by Owner and Builder

This under taking is executed on this …… day of ……. at ……,(ULB) Jointly by:

I. **Owners:**
Sri / Smt. ……....., S/o., W/o., D/o.……..., Aged……, occupation…….R/o. P.No. ……, Locality……
……..

II. **Builders** :
(In case if it is entrusted to builder)
Name of the Builder: ……..……
Address: ……..……
……..……

Here in after called the parties of the Ist part, which terms shall include their legal heirs successors, agents, assignees etc.

In favour of the Commissioner, ……..(ULB) here in after called the 2nd party, which term shall include their representatives, agents, officers and staff of the ……..(ULB).

Whereas the parties of the 1st party have applied for the building permission for the proposed construction of residential / commercial building consisting of ……..…… at D.No.……..…situated at ……..……in accordance with the provisions of A.P. Building Rules-2012.

Whereas the 2nd party imposed the following conditions for grant of the building permission:

That the 1st party shall not deliver the possession of any part of built up area of the above said building proposed to be constructed at the above site by way of sale / lease, unless and until occupancy certificate is obtained from the 2nd party by providing all the regular service connections to each portion of the building requires for occupation.

The 1st party in token of accepting the above conditions imposed by 2nd party according A.P. Building Rules-2012 hereby undertakes and assures the 2nd party that;

We will not deliver the possession of any part of the built up area of building constructed by us to any purchaser or tenant unless & until the occupancy certificate is obtained by us from this 2nd party by submitting the following:

a) Building Completion Notice issued by the Architect duly certifying that the building is completed as per the sanctioned plan.
b) Structural stability certificate issued by the Structural Engineer duly certifying that the building is structurally safe and the construction is in accordance with the specified designs
c) An extract of the site registers containing inspection reports of Site Engineer, Structural Engineer and Architect.
d) Insurance Policy for the completed building for a minimum period of three years.

We the above named deponents do hereby solemnly affairs and certify that we have voluntarily executed, this undertaking with free will signed on this…… day of ……20.. in presence of the following witness.

Witness:	**Parties of 1st part**
1)	1)
2)	2)

Sworn & signed before me.

Notary

APPENDIX – VI

Notarised under taking to be executed
On Rs.100/- N.J. Stamp Paper

UNDER TAKING TO BE GIVEN BY OWNERS, BUILDERS AND LICIENCED TECHNICAL PERSONNEL

This under taking is executed on this…….day of …… 20… at ……,(ULB) Jointly by:

I. **Owners:**
Sri / Smt. ……..... S/o., W/o., D/o……., Aged……, occupation… ……R/o. P.No. ……, Locality……
……..

II. **Builders** :
(In case if it is entrusted to builder)
Name of the Builder: ……
Address: ……
……

III. **Architect**:
Name of the Architect: ……
Municipal Reg.No. ……
Address: ……
……

IV. **Structural Engineer**:
Name of the Structural Engineer: ……
Municipal Reg.No. ……
Address: ……
……

Here in after called the parties of the Ist part, which terms shall include their legal heirs successors, agents, assignees etc.

In favour of the Commissioner, ……(ULB), here in after called the 2nd party, which terms shall include, their representatives, agents, officers and staff of the ……(ULB).

Whereas the persons 1 & 2 being parties of the 1st party have applied for the building permission for the proposed construction of residential / commercial building consisting of ……...floors at Plot/ H.No…… situated at ……..

Whereas the 2nd party imposed the following conditions for grant of the building permission:

I. That the 1st party shall employ a site Engineer, who shall maintain a register in which, the site Engineer, Architect and Structural Engineer shall record their comments at regular intervals i.e. at foundation level, and at each roof, slab level, and submit the periodical report to the 2nd party.

II. That the construction work shall strictly be proceeded with under the supervision of the Architect, Structural Engineer and Site Engineer, without which it shall be treated as construction without permission.

III. That in case Site Engineer / Structural Engineer / Architect is changed during the course of construction or the Architect / Structural Engineer / Site Engineer disassociates themselves with ongoing project, the fact shall immediately be reported to the 2nd party i.e. within seven days by registered post / in person along with consent of newly engaged site Engineer / Architect / Structural Engineer.

V. That all the parties of the 1st part viz. Owner, Builder, Architect, Structural Engineer and Site Engineer shall jointly and severely be held responsible for the structural stability during the building construction.

The 1st party in token of accepting the above conditions imposed by the 2nd party here by under takes and assures that all the above conditions will be strictly adhered too, and if the 1st party commits violation of any of the above conditions, the 2nd party is at liberty to take action deemed fit.

We the above named deponent do hereby solemnly affirm and certify that we have voluntarily executed, this under taking with free will and signed this …… day of …… 20… in presence of the following witness.

Witness:	**Signature of the Parties of 1st part**
1)	1)
2)	2)
	3)
	4)

Sworn & signed before me.

Notary

APPENDIX – VII

Notarised under taking to be executed
On Rs.100/- N.J. Stamp Paper

GENERAL U N D E R T A K I N G

This undertaking is executed on this day i.e. …….. of …… by Sri / Smt. ……..... S/o. / W/o. / D/o……R/o.……
……...Situated at …… ……, herein after called the 1st Party which term shall include their Legal heirs, successors, agents assignees and tenants in favour called the 2nd party which term shall include their representatives, agents, officials, staff of…… (ULB).

WHEREAS, the 1st party has applied for permission for the construction of ……in premises No. ……..
situated at ……. Whereas, the 2nd party imposed the following conditions for granting the permission for the building.

(A) **PARKING SPACE:** The parking space is provided in the Building Cellar/Stilt floor for parking of vehicles and it should not be converted (or) misused for any other purpose other than parking of vehicles and it should be free from all cross walls / partition walls, and rolling shutters should not be erected at any time in future and the 2nd party is at liberty to demolish (or) remove the same without any notice in case, if the 1st party violates the undertaking executed.

(B) **BALCONY PROJECTIONS:** The balconies shall not be enclosed by converting them as toilets/bathrooms or including into rooms by reducing the mandatory open spaces and if any such constructions are made, the same would be removed by 2nd party without giving any notices.

(C) **PAYMENT OF SPECIAL COLLECTION CHARGES FOR GARBAGE:**

That the 1st party should pay special collection charges for garbage disposal as prescribed for garbage refuse collection.

(D) **PAYMENT OF SPECIAL SANITATION FEE:** That the 1st party should pay special sanitation fee for the routine clearing and desilting of storm water drain.

(E) **STACKING OF BUILDING MATERIAL & DUMPING OF DEBRIS:** That the 1st party should not stock the building material and dump any debris on the road margin/ footpath or on ……(ULB) or Government land.

(F) **NO. OF UNITS:** The number of units permitted should not be increased and the building should not be converted into group housing and sold at any time in future.

(G) **PERCOLATION PITS & TERRACE WATER COLLECTION:** The paved surface around the building shall be provided with percolation pits of 4' x 4' x 4' covering at least 30% of such area and provide terrace water collection and open ground (otherwise required charges to be collected by the ULB).

THE 1ST PARTY IN TOKEN OF ACCEPTING THE ABOVE CONDITIONS IMPOSED BY THE 2ND PARTY HEREBY UNDERTAKE THAT:

(a) The parking space provided in the stilt / cellar for parking of vehicles in the Residential flats / Commercial complex will not be converted (or) misused for any other purpose other than parking and it will be free from any partition walls /cross and rolling shutters will not be provided at any time in future and the 2nd party is at liberty to demolish (or) remove the same if provided without any notice.

(b) That the balconies will not be converted into toilets, bath & WCs, Staircase, landing or convert into rooms etc., and if any such construction is made the 2nd party is at liberty remove them without any notice.

(c) That I / We or Purchaser of the flats / shops etc., will pay the special collection charges for the garbage disposal as prescribed for garbage refuse collection on demand from 2nd party.

(d) That I / We or Purchaser of the flats / shops etc., will pay the special sanitation fees for the routine clearing, desilting of storm water drain on demand from 2nd party.

(e) That I / We will not stock the building materials and do not dump debris on the road margin, foot-path and on Municipal Land and the 2nd party is at liberty to remove / seize such material or impose fine on 1st party.

(f) The number of units permitted will not be increased and the building should not be converted into group housing and sold.

(g) That he / she will provide percolation pits of size not less than 4' x 4' x 4' size in the paved surface of the building, covering at least 30% of such area and the pits shall be filed with small pebbles or brick jelly or river sand and covered with perforated concrete slabs. Further terrace water collection and open ground will be provided depending on the site conditions.

If the 1st party violates any of the above condition, the 2nd party is at liberty to take any action deemed fit.

FIRST PARTY

WITNESSES:

1.

2.

VERIFICATIONS:

I, the above named deponent do hereby solemnly affirm and certify that I have voluntarily executed this Affidavit/Undertaking and that its contents are true to the best of my knowledge.

Verified on this day of …….. at ……...

Place:

DEPONENT

Address:

ATTESTED BY:

APPENDIX – VIII

(Under taking with reference to quality of material / workmanship and supervision as per NBC)

Notarised under taking to be executed On Rs.100/-
N.J. Stamp Paper

To
The Commissioner,
…….(ULB),
……

Sir,

I hereby certify that the erection, re-erection of material, alteration, demolition in/of building premises No.…… shall be carried out under the supervision and further I certify that all designs, constructions and the materials (type and grade and workmanship) of the work shall be generally in accordance with the general and detailed specifications submitted along with and as per standards specified by the National Building Code and Bureau of Indian Standards and that the work shall be carried out according to the sanctioned plan.

We, the undersigned are held responsible for structural and other safety of the building during construction and after completion. The structural design including Geo-Technical aspects shall be in accordance with the National Building Code of India. All materials and workmanship shall be a good quality confirming to the Bureau of Indian Standards Specifications and codes. Accordingly, the ……(ULB) can processed for the legal action if any such structural failures occur during of after the construction.

1) Signature of the Site Engineer Name and Address with Regn. :

2) Signature of the Architect Name and Address with Regn. :

3) Signature of the Structural Engineer Name and Address with Regn. :

4) Signature of the Builder / Contractor name and Address with Regn. :

5) Signature of the Land Owner name and Address :

Witness:

1)

2)

Sworn & signed before me.

Notary

APPENDIX – IX

FORM FOR SUPERVISION OF BUILDING WORK

(Notarised under taking to be executed on Rs.100/- N.J. Stamp Paper)

Date	dd	mm	yyyy

To
The Commissioner,

……(ULB)

Sir / Madam,
I hereby certify that the erection, re-erection or material alteration or demolition at House/ Premises No/ Plot as given below shall be carried out under the supervision of a qualified person and I certify that all the materials (Type and grade and the workmanship of the work shall be generally in accordance with the general and detailed specifications submitted along with, and that the work shall be carried out according to the sanctioned plans.

(Use CAPITAL LETTERS only)

A	**NAME OF THE APPLICANT**			
B	**LOCATION OF THE PROPOSED SITE**			
1	Plot No.			
2	Sanctioned Layout No. / LRS No.			
3	Survey No.	Village		
4	Premises / Door No.			
5	Ward No.	Block No.		
6	Road/ Street			
7	Locality			
8	Circle	Division		
9	City/ Town	District		

C	**DETAILS OF OWNER / DEVELOPER / LICENCED TECHNICAL PERSONNEL**		
Sl. No.	**Name**	**Licence No.**	**Signature**
1	…… Owner / Owners / Lessee / Authorised Agent		
2	…… Builder / Developer		
3	…… Architect/ Engineer/ Surveyor		
4	…… Structural Engineer		

Witness:	
Name	**Signature**
1)	
2)	

Sworn & signed before me.

Notary

APPENDIX – X

…….(ULB)

TOWN PLANNING SECTION

TO

BUILDING PERMIT ORDER

Sri / Smt.

FILE No	**CSC**	**TP-**	**200**	

PERMIT No.		

DATE			**20**

Sir / Madam,

Sub: **Building Permission – Sanctioned – Reg.**

Ref: Your Application dated: ……. u/s of ……. Act, ……..and A.P. Building Rules-2012

.

***

Your application submitted in the reference has been examined with reference to the rules and regulations in force and permission is hereby sanctioned conditionally as detailed below:

A	**APPLICANT AND LICENSED PERSONNEL DETAILS:**							
	Applicant							
	Developer / Builder				Lic.No.			
	Licensed Technical Person				Lic No.			
	Structural Engineer				Lic.No.			
	Others							
B	**SITE DETAILS**							
	T.S.No.							
	Premises No							
	Plot No.							
	Layout / Sub Divn. No.							
	Street							
	Locality							
	Name of the ULB							
	DETAILS OF PERMISSION SANCTIONED							
2	Floors	Ground		Upper floors( )			Parking floors	
2(A)	Use		Area (m^2)		Area(m^2)	Level		Area(m^2)
	Residential					Cellar		
	Commercial					Stilt		
	Others					U. Floors		
	Set backs (m)	Front			Rear	Side I	Side II	
	Site Area (m^2)							
	Road affected area (m^2)							
	Net Area(m^2)							
	Tot-lot (m^2)							
	Height (m)							
	No. of RWHPs							
	No. of Trees							
	Others							
	DETAILS OF FEES PAID (RS.) TOTAL :							
1	Building Permit Fee	Rs.		6	Impact Fee	Rs.		
2	Development Charges	Rs.		7	Compounding Fee	Rs.		
3	Betterment Charges:	Rs.		8	Open space Charges	Rs.		
4	Ext. Betterment Charges	Rs.		9	Others	Rs.		
5	Sub-Division Charges	Rs.						
	OTHER DETAILS :							
1	Contractor's all Risk Policy No			Dt		Valid Upto		
2	Notarised Affidavit No		Dt:		Floor handed over		Area (m^2)	

3	Entered in prohibitory property watch register Sl.No		Dt;		S.R.O.	
	Construction to be Commenced Before					
G	**Construction to be Completed Before**					

The Building permission is sanctioned subject to following conditions:

Commissioner
……..(ULB)

The Building permission is sanctioned subject to following conditions:

1. **The permission accorded does not confer any ownership rights, At a later stage if it is found that the documents are false and fabricated the permission will be revoked U/s……Act.**
2. **If construction is not commenced within one year, building application shall be submitted afresh duly paying required fees.**
3. **Sanctioned Plan** shall be followed strictly while making the construction.
4. **Sanctioned Plan** copy shall be displayed at the construction site for public view.
5. **Commencement Notice** shall be submitted by the applicant before commencement of the building U/s……..Act.
6. **Completion Notice** shall be submitted after completion of the building & obtain occupancy certificate U/s ……..Act.
7. **Occupancy Certificate** is compulsory before occupying any building.
8. **Public Amenities** such as Water Supply, Electricity Connections will be provided only on production of occupancy certificate.
9. **Prior Approval should be obtained separately for any modification in the construction.**
10. **Tree Plantation** shall be done along the periphery and also in front of the premises.
11. **Tot-lot** shall be fenced and shall be maintained as greenery at owners cost before issue of occupancy certificate.
12. **Rain Water Harvesting Structure** (percolation pit) shall be constructed.
13. **Space for Transformer** shall be provided in the site keeping the safety of the residents in view.
14. **Garbage House** shall be made within the premises.
15. **Cellar and stilts approved for parking** in the plan should be used exclusively for parking of vehicles without partition walls & rolling shutters and the same should not be converted or misused for any other purpose at any time in future as per undertaking submitted.
16. No. of units as sanctioned shall not be increased without prior approval of ……(ULB) at any time in future
17. This sanction is accorded on surrendering of **Road affected portion of the site** to …….(ULB) at free of cost with out claiming any compensation at any time as per the undertaking submitted.
18. Strip of greenery on periphery of the site shall be maintained as per rules.
19. **Stocking of Building Materials** on footpath and road margin causing obstruction to free movement of public & vehicles shall not be done, failing which permission is liable to be suspended.
20. The permission accorded does not bar the application or provisions of Urban Land Ceiling & Regulations Act 1976.
21. The Developer / Builder / Owner to provide service road wherever required with specified standards at their own cost.
22. A safe distance of minimum 3.0mts. Vertical and Horizontal Distance between the Building & High Tension Electrical Lines and 1.5mts. for Low Tension electrical line shall be maintained.
23. No front compound wall for the site abutting 18m. road width shall be allowed and only Iron grill or Low height greenery hedge shall be allowed.
24. If greenery is not maintained 10% additional property tax shall be imposed as penalty every year till the condition is fulfilled.
25. All Public and Semi Public buildings above 300Sq.mts. shall be constructed to provide facilities to physically handicapped persons as per provisions of NBC of 2005.
26. The mortgaged built up area shall be allowed for registration only after an Occupancy Certificate is produced.
27. The Registration authority shall register only the permitted built up area as per sanctioned plan.
28. The Financial Agencies and Institutions shall extend loans facilities only to the permitted built up area as per sanctioned plan.
29. The Services like Sanitation, Plumbing, Fire Safety requirements, lifts, electrical installations etc., shall be executed under the supervision of Qualified Technical Personnel.
30. **Architect / Structural Engineer** if changed, the consent of the previous Architect / Structural Engineer is required and to be intimated to the ……(ULB).
31. Construction shall be covered under the contractors all risk Insurance till the issue of occupancy certificate (wherever applicable).
32. **As per the undertaking executed in terms of A.P. Building Rules-2012,**
    a. The construction shall be done by the owner, only in accordance with sanctioned Plan under the strict supervision of the Architect, Structural Engineer and site engineer failing which the violations are liable for demolition besides legal action.
    b. The owner, builder, Architect, Structural Engineer and site engineer are jointly & severely responsible to carry out and complete the construction strictly in accordance with sanctioned plan.
    c. The Owner, Builder, Architect, Structural Engineer and Site Engineer are jointly and severely are held responsible for the structural stability during the building construction and should strictly adhere to all the conditions in the G.O.

d. The Owner / Builder should not deliver the possession of any part of built up area of the building, by way of Sale / Lease unless and until Occupancy Certificate is obtained from ……..(ULB) after providing all the regular service connections to each portion of the building and duly submitting the following.
   (i) Building Completion Certificate issued by the Architect duly certifying that the building is completed as per the sanctioned plan.
   (ii) Structural Stability Certificate issued by the Structural Engineer duly certifying that the building is structurally safe and the construction is in accordance with the specified designs.
   (iii) An extract of the site registers containing inspection reports of Site Engineer, Structural Engineer and Architect.
   (iv) Insurance Policy for the completed building for a minimum period of three years.

33. **Structural Safety and Fire Safety Requirements** shall be the responsibility of the Owner, Builder/ Developer, Architect and St. Engineer to provide all necessary Fire Fighting installations as stipulated in National Building Code of India, 2005 like;
   i) To provide one entry and one exit to the premises with a minimum width of 4.5mts. and height clearance of 5mts.
   ii) Provide Fire resistant swing door for the collapsible lifts in all floors.
   iii) Provide Generator, as alternate source of electric supply.
   iv) Emergency Lighting in the Corridor / Common passages and stair case.
   v) Two numbers water type fire extinguishers for every 600 Sq.mts. of floor area with minimum of four numbers fire extinguishers per floor and 5k DCP extinguishers minimum 2 Nos. each at Generator and Transformer area shall be provided as per I.S.I. specification No.2190-1992.
   vi) Manually operated and alarm system in the entire buildings;
   vii) Separate Underground static water storage tank capacity of 25, 000 lits. Capacity.
   viii) Separate Terrace Tank of 25,000lits capacity for Residential buildings;
   ix) Hose Reel, Down Corner.
   x) Automatic Sprinkler system is to be provided if the basement area exceed 200 Sq.mts.
   xi) Electrical Wiring and installation shall be certified by the electrical engineers to ensure electrical fire safety.
   xii) Transformers shall be protected with 4 hours rating fire resist constructions.
   xiii) To create a joint open spaces with the neighbours building / premises for maneuverability of fire vehicles. No parking or any constructions shall be made in setbacks area.

By order

COMMISSIONER
……. ……(ULB)

Copy to
1. The Town Planning Section Head
2. The Officer concerned, Property Tax Section
3. The Municipal Engineer/M.D, HMWS&SB.
4. The A.P. TRANSCO……..Circle,
5. The Officer concerned, Stamps and Registration Department
6. The Officer concerned, A.P. Fire & Emergency Service Department……,.

APPENDIX – XI

BUILDING COMMENCEMENT NOTICE

(To be submitted by Owner/Builder/Developer)

To **The Commissioner,** **……(ULB)**			**Date**	dd	mm	yyyy
Ref:	**Building Permit / Proceedings No**		**Date**	dd	mm	yyyy
	FILE No.					

Sir / Madam,

I/We hereby give notice that the work of the construction will be commenced on (Date) **……** as per the details of the Sanctioned Plan as given below. *(Due date for commencement of work is given in Building Permit Order)*

A	**NAME OF THE APPLICANT**			
B	**LOCATION OF THE PROPOSED SITE**			
1	Plot No.			
2	Sanctioned Layout No. / LRS No.			
3	Survey No.	Village		
4	Premises / Door No.			
5	Ward No.	Block No.		
6	Road/ Street			
7	Locality			
8	Circle	Division		
9	City/ Town	District		

C	**DETAILS OF THE SANCTIONED PLAN**						
1	Building Permit / Proceedings No			Date	dd	mm	yyyy
2	Site Area (m^2)	As per Documents	As per submitted Plan	Road Widening Area	Net Area		
3	Floors as per Sanctioned Plan	Cellar	Stilt	Ground	Upper Floors		
4	Number						
5	Use						
6	Floor Area (m^2)						
7	Parking Area (m^2)						
8	Setbacks (m)	Front	Rear	Side I	Side II		
9	Height (m)						

D	**DETAILS OF OWNER / DEVELOPER / LICENCED TECHNICAL PERSONNEL**		
Sl. No.	**Name**	**Licence No.**	**Signature**
1	…… Owner / Owners / Lessee / Authorised Agent		
2	…… Builder / Developer		
3	…… Architect/ Engineer/ Surveyor		
4	…… Structural Engineer		

APPENDIX – XII

…… (ULB)

BUILDING COMPLETION NOTICE

(To be submitted along with other relevant documents)

To **The Commissioner,** **……(ULB)**		**Date**	dd	mm	yyyy
Ref:	**Building Permit / Proceedings No**	**Date**	dd	mm	yyyy
	Building Commencement Notice submitted by the Applicant	**Date**	dd	mm	yyyy
	FILE No.				

I/ We hereby give notice that the erection of the building / erection of works have been completed as per Sanctioned Building Plan. The work has been completed to my/our best satisfaction. The workmanship and all the materials (type and grade) have been used strictly in accordance with general and detailed specifications. No provisions of the Building Bye-Laws/Rules, conditions prescribed or orders issued thereunder have been transgressed in the course of the work. I/We hereby enclose the plan of the building completed in all aspects. The land is fit for which it has been developed or redeveloped and the building is fit for use for which it has been erected, re-erected or altered, constructed and enlarged. The necessary occupancy certificate may be issued. Any subsequent changes from Completion Drawings will be the responsibility of the owner(s).

(Use CAPITAL LETTERS only)

A	**NAME OF THE OWNER / DEVELOPER**			
B	**LOCATION OF THE PROPOSED SITE**			
1	Plot No.			
2	Sanctioned Layout No. / LRS No.			
3	Survey No.	Village		
4	Premises / Door No.			
5	Road/ Street			
6	Ward No.	Block No.		
7	Locality			
8	Circle	Division		
9	City/ Town	District		

C	**DETAILS OF THE COMPLETED BUILDING**				
1	Building Permit / Proceedings No.		Date	d d	m m	y yyy
2	a	Due date for completion of the building	Date	d d	m m	y yyy
	b	Date on which completion notice submitted	Date	d d	m m	y yyy
	c	Whether it is completed within the stipulated time	Yes		No	
	d	If No, the Fine to be paid				

3	**Site Area (m^2)**	As per Documents	As per submitted Plan	Road Widening Area	Net Area

4	**No. of Floors**	Cellar	Stilt	Ground	Upper floors
	a As per Sanctioned Plan				
	b As per Completed Building Plan				
5	**Use of the Building**				
	a As per Sanctioned Plan				
	b As per Completed Building Plan				
6	**Floor Area (m^2)**				
	a As per Sanctioned Plan				
	b As per Completed Building Plan				
7	**Parking Area (m^2)**				
	a As per Sanctioned Plan				
	b As per Completed Building Plan				
8	**Setbacks(m)**	Front	Rear	Side I	Side II
	a As per Sanctioned Plan				
	b As per Completed Building Plan				
	c Extent of deviation in %				
	d Fine to be Paid (Rs)				
9	**Height (m)**	As per Sanctioned Plan		As per Completed Building Plan	

D	**DETAILS OF OWNER / DEVELOPER / LICENCED TECHNICAL PERSONNEL**		
Sl. No.	**Name**	**Licence No.**	**Signature**
1	…… Owner / Owners / Lessee / Authorised Agent		
2	…… Builder / Developer		
3	…… Architect/ Engineer/ Surveyor		

4	……. Structural Engineer		

Enclosures:

1. Copy of the Sanctioned Plan
2. Copy of the Building Permit Order
3. Copy of the Completed Building Plan showing the changes if any to Approved Building Plan along with a statement of deviations.
4. Photographs of constructed building showing setbacks on four sides, elevation and roof level
5. Land value certificate issued by the Revenue Department (If deviations are made to Sanctioned Plan)

APPENDIX – XIII

..... (ULB)

OCCUPANCY CERTIFICATE

Ref:	**Building Permit / Proceedings No**		**Date**	dd	mm	yyyy
	Building Commencement Notice submitted by the Applicant		**Date**	dd	mm	yyyy
	Building Completion Notice submitted by the Applicant		**Date**	dd	mm	yyyy
	FILE No.					

The Owners/Builder/Developer /Licensed Architect/Engineer / Structural Engineer have given the Building Completion Notice that the building has been completed as per the specifications of Sanctioned Plans and it is declared that the building conforms in all respects to the requirements of the building regulations contained under the statutory provisions in the respective Municipal Act and Building Bye Laws/Rules issued by the Govt.**This is to certify that the building has been inspected and is declared fit for occupation.**

(Use CAPITAL LETTERS only)

A	**NAME OF THE OWNER / DEVELOPER**			
B	**LOCATION OF THE PROPOSED SITE**			
1	Plot No.			
2	Sanctioned Layout No. / LRS No.			
3	Survey No.	Village		
4	Premises / Door No.			
5	Road/ Street			
6	Ward No.	Block No.		
7	Locality			
8	Circle	Division		
9	City/ Town	District		

C	**DETAILS OF THE COMPLETED BUILDING**					
1	Building Permit / Proceedings No.		Date	d d	m m	y yyy
2	a	Due date for completion of the building	Date	d d	m m	y yyy
	b	Date on which completion notice submitted	Date	d d	m m	y yyy
	c	Whether it is completed within the stipulated time	Yes		No	
	d	If No, the Fine collected (Rs)				

3	**Site Area (m^2)**	As per Documents	As per submitted Plan	Road Widening Area	Net Area

4	**No. of Floors**		Cellar	Stilt	Ground	Upper floors
	a	As per Sanctioned Plan				
	b	As per Completed Building Plan				
5	**Use of the Building**					
	a	As per Sanctioned Plan				
	b	As per Completed Building Plan				
6	**Floor Area (m^2)**					
	a	As per Sanctioned Plan				
	b	As per Completed Building Plan				
7	**Parking Area (m^2)**					
	a	As per Sanctioned Plan				
	b	As per Completed Building Plan				
8	**Setbacks(m)**		Front	Rear	Side I	Side II
	a	As per Sanctioned Plan				
	b	As per Completed Building Plan				
	c	Extent of deviation in %				
	d	Fine Paid (Rs)				
9	**Height (m)**		As per Sanctioned Plan		As per Completed Building Plan	

To
Sri / Smt……

Commissioner

APPENDIX – XIV

Name of the Urban Local Body
TOWN PLANNING SECTION
BUILDING APPLICATION SELF-SCRUTINY STATEMENT

FILE No.	Sl. No	Sl. No	Sl. No	Sl. No	**CSC**	**TP**	Ward No.	Circle No.	Zone No.	YYYY

Sub: Building Application for grant of permission for Construction of .... Notice u/s 209 & 227 of APM Act, 1965 / 428 & 433 of HMC Act, 1955.

Date of submission at CSC	dd	mm	yyyy

PART: I	**BASIC INFORMATION**									
A	**ADDRESS OF THE APPLICANT**									
1	Name									
2	Door No./Flat No.									
3	Road/Street									
4	Locality / Mandal									
5	City			PIN						
6	District									
7	Phone / Mobile No.									
8	e-mail									
B	**LOCATION OF THE PROPOSED SITE**									
10	Plot No.									
11	Sanctioned Layout No. / LRS No.									
12	Survey No.	Village								
13	Premises / Door No.									
14	Road/ Street									
15	Ward No.	Block No.								
16	Locality									
17	Circle	Division								
18	City/ Town	District								

C	**DETAILS OF BUILDER / LICENSED PERSONNEL**			
S. No.	Name	Address	License No.	Validity
1	..... Builder / Developer			
2	..... Architect/Engineer/Surveyor			

3	…… Structural Engineer			
4	…… Owner			

D	**DETAILS OF THE PROPOSED CONSTRUCTION**					
1	Site Area (in Sq. m)	As per Documents				
		As on Ground				
2	Total Floor Area (in Sq. m)					
3	No. of Floors	Cellars	Stilt	Ground	Mezzanine	Upper Floors
4	Floor Area (in Sq. m)					
5	Use of the Building	Individual Residential	Group Housing	Commercial	Institutional	Others (specify)
6	Height (m)	Excluding Parking Floor		From Ground Level		

E	**DETAILS OF DOCUMENTS**			
S. No.	**Document details**	**Not required**	**Submitted**	**Not submitted**
1	Building Application duly signed by the Owner, Builder, Architect, Structural Engineer.			
2	Building Plans (1 Tracing Cloth + 7 Ammonia Prints) duly signed by Owner, Builder, Architect/Engineer/Surveyor, Structural Engineer			
a	Location Plan (Topographical Plan) (scale 1:2000)			
b	Contour Plan (in case of undulating terrain)			
c	Site Plan (scale 1:200)			
d	Detailed Drawings of each floor (scale 1:100)			
e	Detailed Drawings of Parking Floors (scale 1:100)			
f	Terrace Plan (scale 1:100)			
g	Building Elevations (scale 1:100)			
h	Cross Section (scale 1:100)			
i	Longitudinal Section, (scale 1:100)			
j	Plan showing rainwater harvesting pits (scale 1:100) (as per G.O Ms. No.350 M.A dt.9.6.2000)			
k	Mortgage Plan (scale 1:100)			
l	Extract of Master Plan / ZDP			
m	Extract of Road Development Plan / Junction Improvement Plan, if any (scale 1:100)			
3	Photographs (4) showing four sides of the site.			
4	Fee & Charges Particulars (Challan / Demand Draft) Rs. Challan No. Date DD No. Dt. Bank Name: Branch:			
5	Declaration forms duly singed by the owner and attested by Gazetted Officer.			
6	Licence copy of Architect renewed by COA (or) Licence copy of the Town Planner / Engineer / Surveyor issued by ULB attested by Gazetted Officer.			
7	Licence copy of the Structural Engineer issued by ULB attested by Gazetted Officer.			

8	Licence copy of the Builder / Developer issued by ULB attested by Gazetted Officer.			
9	Ownership documents (Two sets attested by Gazetted Officer)			
10	Link documents (Attested by Gazetted Officer)			
11	Latest Encumbrance Certificate issued by Registration Department			
12	Previous Sanctioned Plan Copy (if the existing building in the site was sanctioned previously)			
13	Up to date Property Tax Receipt			
14	N.O.C. from Airport Authority of India, if applicable.			
15	N.O.C. & approved plans from Andhra Pradesh State Disasters Response & Fire Services Department, if applicable			
18	Rs.20/- Non-judicial stamp paper			
19	Soil Testing Report.			
20	Structural Stability Certificate issued by Licensed Structural Engineer.			
21	Structural Drawings			
22	Undertaking Rs.100/- Non judicial stamp paper duly stating whether the construction is taken up by the owner.			
23	Declaration-Cum-Undertaking on Rs.100/- Non Judicial Stamp Paper from the Owner and Builder.			
24	Undertaking on Rs.100/- Non Judicial Stamp by Owner, Builder, Architect, Structural Engineer (Duly Notarised).			
25	Undertaking on Rs.100/- Non Judicial Stamp paper jointly by owner and Builder seeking Occupancy Certificate. (Duly Notarised).			
26	Joint undertaking on Rs.100/- Non Judicial Stamp paper for not stocking Building materials on road margin not to enclose balconies, usage of parking, payment of special sanitation charges, garbage charges and not to increase number of units.			
27	Comprehensive Insurance Policy for 3 years			
28	Undertaking on Rs. 20/- NJS paper for handing over road widening portion wherever applicable.			
29				
30				

F	***To be filled by CSC staff***									
Verified. All the required particulars submitted. The application is admitted & acknowledgement is issued.										
File No. Assigned	*0*	*0*	*0*	*0*	***CSC***	***TP***	*Ward*	***Circle***	***_ Z***	*yyyy*
Signature of I/c CSC										

G	***BACK REFERENCES & OTHER DETAILS*** *(to be filled by clerk)*			
1	*Back Reference*	*Enclosed File No.*	*Not enclosed as there is no back reference*	
			Not enclosed as the back reference is not traceable	
2	*Any other relevant files*	*Enclosed File No.*	*Not enclosed as there is no back reference*	
			Not enclosed as the relevant files are not traceable	
3	*Whether there is any court case connected with the site or the proposals.*			

Signature of the Jr. Asst. / Sr. Asst.		
Signature of the TPBO/TPS/TPO/TPA /ACP		

PART: II	LAND OWNERSHIP INFORMATION

A	Ownership Details
	In support of ownership of title, the documents (attested by Gazetted Officer) submitted have been examined and the details are tabulated as follows :

S. No.	Doc. No. & Date	Status	Vendor	Vendee	Sy.No. / Plot No./ H.No.	Extent (in Sq.m)	Schedule of boundaries	
1							E	
							S	
							W	
							N	
2							E	
							S	
							W	
							N	
3							E	
							S	
							W	
							N	

B	Details of the certificate issued by Special Officer, Urban Land Ceiling Dept. *(If applicable)*

PART: III	CERTIFICATES INFORMATION

A	Certificates / Clearances submitted

S. NO.	Govt. / Dept. / Agency	Memo / Certificate / Letter Ref.	Details	Remarks
1	Govt. Orders, if any.			
2	NOC from Collector / JC / Tahsildar / Revenue Dept. (Wherever required).			
3	Previous sanction Plan, if approved previously			
4	NOC from AAI, (wherever required)			
5	NOC from Andhra Pradesh State Disasters Response & Fire Services Department,, (wherever required)			
6	Structural stability certificate issued by the Competent Authority			
7	NOC from Police Department (Traffic) (wherever required)			
8	Traffic Impact Study by Qualified Consultant (wherever required)			
9	NOC from Heritage Conservation Committee (wherever required)			
10	NOC from Irrigation Department in case of lands abut water bodies, Water courses & nalas (wherever required)			
11	NOC from Revenue Department in case of lands abut water bodies, Water courses & nalas (wherever required)			
12	NOC from Railways (wherever required)			
13	NOC from State Environmental impact Assessment Authority (wherever required)			
14	NOC from Defense Authority (wherever required)			
15	NOC from State Naval Science and Technology Laboratory, Visakhapatnam (NSTL) (wherever required)			
16	NOC from Oil / Gas Authority (wherever required)			
17	TDR Certificate (wherever required)			

PART: IV	TECHNICAL INFORMATION		
A	**Details of the Proposals**		
B	**History of the Case** (In case of revision / resubmission / additional proposals)		
C	**Govt. Orders and Rules applicable to the submitted proposals:** (Tick appropriate item)		
1	Zoning Regulations	Appended to Master Plan	
2	Building Byelaws	Appended to HMC Act, 1955 / APM Act 1965 /A.P. Building Rules-2012	
3	G.O.Ms.No.508 MA, dt:15.11.02	Declaration of Commercial Roads in GHMC area	
4	G.O.Ms.No.288 MA, dt:03.04.08	Extensive Modifications to Master Plan of HUDA	
5	G.O.Ms.No.766 MA, dt:18.10.07	Categorization of notified commercial roads in GHMC area	
6	G.O.Ms.No.486 MA ,dt:07.07.2007	Rules for Multiplexes 2007	
7			
8			
9			
10			

D	**Inspection Report** *(To be filled by inspecting officer)*	**Inspected on**	d	d	m	m	y	y	y	y
		Inspected the site and its surroundings and verified the measurements, Schedule of boundaries documents etc. of the site under reference.								

E	**Ground Position**		
1	Site falls in Approved Layout Area		
2	Site is a Regularized Plot		
3	Site falls in already developed area		
4	Site falls in unapproved layout area		
5	Plain Land / Undulated / Elevated from road level / Below the road level / ……		
7	Site enclosed with Fence / Compound wall / No Compound wall / Boundary Stones if no compound wall		
8	Work Commenced / Not Commenced		
9	If commenced, the status of construction at the time of inspection		
10	Site Surrounded by (physical features)		
	EAST		
	SOUTH		
	WEST		
	NORTH		
11	Whether the above physical features are tallying / Not tallying with the schedule of the Documents.	**YES**	**NO**
		Remarks	

F	**Restrictions of building activity in the vicinity of certain areas:** *(Vide Rule 3)* Whether the site falls in the area where there are restrictions of building activity as stated in the A.P. Building Rules – 2012.	**YES**	**NO**
		If yes, give the details and specify the action to be taken:	

G	**Location of the Site** *(vide rule 4 of A.P. Building Rules 2012)*
1	**SITES IN OLD/EXISTING BUILT-UP AREAS / CONGESTED AREAS / SETTLEMENT (GRAM KHANTAM/ABADI)**

A	**Areas of Annexure I**	Minimum abutting road width required (in m)	**Specify the area:**		
			Ward No.	Block No.	Name of the Locality
	All Buildings (Other than Group Housing) – Maximum permissible **up to 10m height**	**9***			
	*In case of Sites in Category-A, if a Site is abutting to a road which is less than 9m in width, a building may be permitted with a maximum height of 10m in such site, after leaving 4.5m from the Centre Line of such road for widening and the same shall be handed over the Local Body and shall leave the prescribed setback as per Table-III after the said road widening portion. No relaxations are permissible in such cases.				
B	**SITES IN NEW AREAS / APPROVED LAYOUT AREAS** The type of buildings & intensity of development shall be w.r.t. the abutting road width, viz.,				
1	**Specify the area:**		Ward No.	Block No.	Name of Locality

2	**Proposal falls in** *(Tick appropriate type)*	**B1**	**B2**	**B3**	**B4**
	Minimum abutting road width required (in m)	9**	12	18	30m & above
3	**Road width as per ground position**				
	***In case of Sites in Category-B, if a Site is abutting to a road which is less than 9m in width, individual residential building may be permitted with a maximum height of 12m, after leaving 4.5m from the Centre Line of such road for widening and the same shall be handed over to the Local Body and shall leave the prescribed setback as per Table-III after the said road widening portion. No relaxations are permissible in such cases.*				
4	**IF THE PROPOSALS ARE FOR HIGH RISE BUIDLING, WHETHER IT IS PERMISSIBLE IN THE SITE**	**YES**		**NO**	
	REMARKS				

H	**Land Use**		
1	Whether the Extract of Land Use Map of MP/ZDP is enclosed	**YES**	**NO**
2	Land Use in which the site falls as per of MP/ZDP		
3	Proposed Use of the Building		
4	Whether permissible as per Zoning Regulations	**YES**	**NO**
5	Whether the site falls in the category of the uses permissible as per		
a	GOMS.NO.508 M.A. dt 15.11.02 (in GHMC area)		
b	GOMS.NO.766 M.A. dt 18.10.07 (in GHMC area)		
c			
d			
e			
f			

I	**Access** *(in m)*						
1	Direction	Min. required road width	Existing road width	Proposed road width as per ZDP/RDP/MP/ as per rule-4(b)/(c)	Affected in road widening		Remarks
					Depth	Area (Sq. m)	
	East						
	South						
	West						
	North						

2	If the site u/r is affected in road widening, whether the road affected portion has been handed over already?	**YES**	**NO**
3	Whether the road is already formed in the widened portion	**YES**	**NO**
4	Whether the road widening portion has been handed over free of cost by the	**YES**	**NO**

	applicant in full extent. If yes, when was it handed over?		
5	Whether the applicant has agreed to hand over the advance possession of the area affected physically at site free of cost through a prescribed undertaking and plan showing affected area.	**YES**	**NO**
6	Whether the applicant is eligible to claim any relaxations as per rule -16	**YES**	**NO**
7	If Yes, whether the applicant is claiming any relaxations	**YES**	**NO**
8	If so, what are the relaxations being claimed		
9	If so, give the permissible details as per A.P. Building Rules-2012. Permissible floor area before road widening = a Areas effected in road widening = b Total permissible floor areas = a + b	Total Permissible Floor area (m^2)	
		Proposed Floor area (m^2)	
		Remarks	

J	***Details of Plot area*** (in Sq. m)			
1	*Total Plot Area as per Documents*	*Total Plot Area as per Site*	*Affected area, if any*	*Net Plot Area*
2	*Whether the site involves a sub-division of plot / land.*		*YES*	*NO*
3	*If yes, whether the residual plot fulfils the minimum requirements as per rules.*		*YES*	*NO*
4	*If yes, sub-division charges are to be collected*		*YES*	*NO*

K	***Height of the Building*** (in m.) (vide rule 5 (a), (b); Table III & IV)	*Net Plot area (m^2)*	*Road width (m)*	*No. of floors*

S. No.	*Item*	*Permissible Height*		*Proposed Height*		*Excess / Shortfall*		*Remarks*
		Stilt/ Ground	*Upper floors*	*Stilt/ Ground*	*Upper floors*	*Stilt/ Ground*	*Upper floors*	
1	*As per A.P Building Rules 2012* (vide Rule 5 (a), (b); & Table III, IV & conditions)							
2	*As per NOC of AAI*							
3	*As per Approved Plan of A.P. State Disasters Response & Fire Services Department.* (vide Rule 5(f)(xv)							

As per the provisions of the A.P. Fire Service Act, 1999, Residential buildings of height more than 18 m, Commercial buildings of height 15m and above and buildings of public congregation like Educational Buildings, Cinema Theatres, Function Halls and other Assembly Buildings on plot area of 500Sq.m. and above or of height above 6m are required to obtain prior clearance from A.P. State Disasters Response & Fire Services Department from fire safety point of view.

L	***All-round Open Spaces*** (all in mts) (vide rule 5 (a), (b);Table III & IV)	
1	*Plot area (**Net area**)* (in m^2)	
2	*Height of the proposed building excluding the parking floors* (in m.)	

Sides	*Direction*	*Road width (in m)*	*Set back (in m)*		*Remarks*
			Required	*Provided*	
F					
R					
S1					
S2					

L	***All-round Open Spaces*** (all in mts) (vide rule 5 (a), (b);Table III & IV)	
1	*Plot area (**Net area**)* (in m^2)	
2	*Height of the proposed building excluding the parking floors* (in m.)	

Sides	*Direction*	*Road width (in m)*	*Set back (in m)*		*Remarks*
			Required	*Provided*	
F					
R					
S1					
S2					

3	Whether transfer of setbacks is involved *(vide rule 5(f)(viii) &(ix)*		**YES**	**NO**
a	**Plot size : 300** m^2**-up to 750** m^2 *(permitted to transfer up to 1m of setback from one side to the other side)*	YES/ NO	**If Yes, give the details: (Plot area:(m^2))**	
b	**Plot size: above 750** m^2**,** *(permitted to transfer up to 2 m of setback), Needs to be uniform at any given point, subject to maintaining of minimum building line in the front.*	YES/ NO		

Side	Permissible setback	Provided setback	Permissible plinth area without transfer	Proposed plinth area after transfer
F				
R				
S1				
S2				

4	Whether the site abuts more than one road *(vide rule 5(f)(ii)*	**YES**	**NO**	
	Front setback proposed (m)	**Road width (m)**	**Permissible setback(m)**	**Provided setback(m)**	**Remarks**
5	Whether the site is a narrow plot ***(vide rule 5(f)(x)*** (***Narrow plot is one whose extent is not more than 400sq.m and where the length is 4 times of the width of the plot)***	**YES**	**NO**	

a	Plot Size	**Length *(m)***		**width *(m)***		Area (m^2)
b	**Height**	**Side setback permissible**				
i	**Up to 10m**	**1 m**				
ii	**above 10m & up to 15m**	**2m**				

Side	Permissible setback	Provided setback	Permissible plinth area without transfer	Proposed plinth area after transfer
F				
R				
S1				
S2				

6	Whether the proposals are more than 1 block *(vide rule 5(f)(xii), (Table-iii) / 7(a)(xi), (Table-iV)*	**YES**	**NO**	
	Space between two blocks shall not be less than the site setbacks of tallest block as per Table III & IV as the case may be	**Height of the block *(m)***		
		Between 2 Blocks	**Required**	**Proposed**	**Remarks**

M	Lighting and Ventilation ***[vide rule 5(f)(xi) / 7(a)(xiv)***		
1	Whether the lighting and ventilation of a building is through the means of a chowk or inner	**YES**	**NO**
		Minimum area	**Minimum width**

	courtyard or interior open space/duct	Required	Proposed	Remarks	Required	Proposed	Remarks
		9/25 m²			2/3 m		

2	**If there are no ducts, whether the lighting and ventilation proposed for the building is satisfying the rules**	**YES**	**NO**	**Remarks**

3	**Ventilation to parking floors i.e. cellar & sub-cellars**	**Required**	**Provided**	**Remarks**
		2.5% of each parking floor area		
4	**Width of the corridors (m)**	2.0		

N	Greenery/Lawn ***[vide rule 5(f)(iii),(iv) / 7(a)(viii) whichever is applicable]*** :		
1	A strip of at least 1.0 m greenery / lawn along the frontage of the site within the front setback.	**Marked on the plans and hence Satisfied**	
		Not Marked on the plans and hence not satisfied	
2	**For the plots area above 300 m² from the 1 mt Greenery/lawn along the front and periphery are left.**	**Marked on the plans and hence Satisfied**	
		Not Marked on the plans and hence not satisfied	
3	**For** high rise buildings **a minimum 2 mt Greenery/lawn along the front and periphery are left.**	**Marked on the plans and hence Satisfied**	
		Not Marked on the plans and hence not satisfied	

O	***Recreational open space (Tot-lot)*** [vide rule 5(f)(v) /7(a)(vii) / 8(g) whichever is applicable] (To be provided for all residential / institutional / industrial plots above 750 *m²* of plot area)						
1	*Proposed Use of the Building*	*Residential*	*Institutional*	*Industrial*	*Others*		
2	*Plot area of the site m²*						
3	*Permissible*		*Proposed*		*Excess / Shortfall*		*Remarks*
	%	*in m²*	*%*	*in m²*	*%*	*in m²*	
4	*No. of Locations where this open space is provided*						
5	*Minimum width of 3m and extent not less than 15 m² in case of Non-High Rise Buildings (rule-5(f)(v) and 50m² in case of High Rise Buildings (rule-7(a)(vii) is provided*				**YES**		**NO**

P	Public Utility ***[vide rule 5(f)(vii)]***		
1	**For Plots 750 m² and above, whether an area of 3m x 3m for the purpose of setting of public utilities like Distribution transformer etc., is provided within the owners site subject to mandated public safety requirements.**	**YES**	**NO**
		(If yes, Provided towards):	
2	Whether the space for garbage bin is proposed	**YES**	**NO**
3	Whether the drainage & water lines are existing	**YES**	**NO**
4	If so, whether the same is indicated on the plans		

Q	Common amenities & facilities ***[vide rule 15(x)]***					
1	**No. of Units proposed**					
2	**Whether Common amenities & facilities like convenient shopping, committee hall / club house, crèche, gymnasium etc. are required (where no. of units are more than 100)**	**YES**		NO		
3	**If Yes, the extent of Built up area for Common amenities & facilities provided**	**Required**		**Provided**		**Remarks**
		% to total Built up area	**Extent (m²)**	**% to total Built up area**	**Extent (m²)**	
		3				

R	**Parking Space** *[vide rule 13 & table V & rule 15(a)(iv)]*	
	(Rule 5 (d) & 13(c)(iv))	*In m²*
1	*Cellar 1*	
2	Cellar 2	

3	Cellar 3		
4	Cellar 4		
5	**Stilt**		
6	**Any upper floor**		
7	**Visitors Parking area (Space over & above 6m (excluding green strip) set back is considered)** ***(rule 13(c)(xii)***		
8	TOTAL PARKING AREA (m^2)		
9	**Proposed Built Up Area(m^2)**	**a** Residential	
		b Commercial	
		c Institutional	
		d	
		Total	
10	Parking area to total built up area	%	

12	CATEGORY OF BUILDING /ACTIVITY PROPOSED	Parking area to be provided **as percentage of total built up area + visitor's Parking (%)**	Parking area provided **Percentage to total built up area + visitor's Parking (%)**	**Remarks**
a				
b				
c				
d				

13	**Facilities provided in the stilt floor** ***(rule 13.c.vi)***	**Required M^2**	**Proposed M^2**	Remarks
		< 25		

14	**The parking spaces should be efficiently designed and clearly marked and provided with adequate access, aisle, drives and ramps required for manoeuvring of vehicles.** ***(rule 13.c.ii)***	Permissible(m)	Proposed(m)	**Remarks**
15	**Minimum width of Single Ramp** ***(rule 13.c.vii)***	5.4		
16	**Minimum width of ramps if proposed more than one ramp** ***(rule 13.c.vii)***	3.6		
17	**Minimum Setbacks for Cellars from ground level**			
a	**For sites of extent of up to 1000sq.m** ***(rule 13.c.x)***	**1.5**		
b	**For sites of extent of above 1000sq.m up to 2000 m^2** ***(rule 13.c.x)***	**2.0**		
c	**For sites of extent of above 2000sq.m** ***(rule 13.c.x)***	**3.0**		
d	**Minimum Setback in case of more than one cellar** ***(rule 13.c.x)***	**0.5 m additional setback for every additional cellar floor**		
18	Cellar area proposed for utilities & non habitable purposes like A/C Plant room, Generator room, STP, Electrical installations, Laundry, etc, *(rule 13.c.xi)*	**10%**		
19	**Height of the Cellar floor proposed (m)**	**Minimum 2.5**		
		Maximum 4.5 in case of mechanical system		
20	**Height of the Stilt Floor proposed (m)**	**Minimum 2.5**		

PART: V	**SPECIAL CATEGORY BUILDING INFORMATION** In continuation of the above data, following information shall be filled up, if the building proposed is one of the following special buildings.	
	SPECIFY THE TYPE OF BUILDING	Tick the relevant item
A	HIGH RISE BUILDINGS/COMPLEXES *[vide rule 7.a]*	
B	TOWER AND PODIUM TYPE BUILDING *[vide rule 7.b]*	
C	"STEPPED TYPE" OR "PYRAMIDAL TYPE" BUILDING *[vide rule 7.c]*	

D	GROUP DEVELOPMENT SCHEMES *[vide rule 8.]*	
E	ROW TYPE HOUSING / ROW TYPE SHOPPING PRECINCTS *[vide rule 9]*	
F	CLUSTER HOUSING *[vide rule 10]*	
G	**BUILDINGS WITH CENTRAL COURT-YARDS FOR COMMERCIAL USE** ***[vide rule 12]***	
A	HIGH RISE BUILDING /COMPLEXES ***[vide rule 7.a]*** *[FOR 'B' & 'C' ALSO THE FOLLOWING INFORMATION EXCEPT SET BACK REQUIREMENTS SHALL BE FILLED UP]**	

1	**WHETHER THE SITE IS ELIGIBLE FOR HIGH-RISE BUILDING** *[vide rule 7]*	**YES**	NO	
		Remarks		
2	Minimum size of plot (in sq. m) *[vide rule 7.a.ii]* *"In respect of site proposed for high rise buildings and affected in road widening where there is shortfall of the net plot size, up to 10% of such shortfall in net plot area would be considered with the proposed height and corresponding minimum all round setbacks".*	Required	Provided	**Remarks**
		2000 **Without road widening**		
		1800 **With road widening**		
3	NOC from **Airport Authority of India** is obtained [vide rule 7.a.v]	**YES**	NO	
4	If **Yes**, AAI letter No. & date			
5	Height Permitted by AAI	MSL (ground)	MSL (construction)	Height
6	NOC form **Fire Services Department** is obtained *[vide rule 7.a.vi]*	**YES**	NO	
7	If Yes, Letter No. & date of approval of Fire Services Department			
8	No. of Floors permitted by Fire Services Department			
9	Height Permitted (in m) by Fire Services Department			
10	Use of the proposed building permitted by Fire Services Department			

11	Setbacks permitted (in m) by Fire Services Department	**Front**	**Rear**	**Side1**	**Side2**
12	Whether the plans submitted are tallying with the Plans permitted by the Fire Services Department				
13	Whether there are proposals for transfer of setbacks in case of buildings of height less than 30m *[vide rule 7.a.xii]*	YES	NO		

If Yes, give the details

Side	**Permissible setback**	**Provided setback**	**Permissible plinth area without transfer m^2**	**Proposed plinth area after transfer m^2**
F				
R				
S1				
S2				

14 *	Height of the Building proposed (m) *[vide rule 7.a.x.Table IV]*	Min. abutting road width (m)	Front open space* (m)	Min. open space on remaining sides(m) *		
				Rear	**Side 1**	**Side 2**
	.....(m)					
		Satisfied / Not Satisfied	**Satisfied / Not Satisfied**	**Satisfied / Not Satisfied**	**Satisfied / Not**	**Satisfied / Not Satisfied**

					Satisfied
15	Balcony projection proposed *[vide rule 7.a.xiv]*	*Permissible*	*Proposed*	*Permissible /Not permissible*	
	From which level proposed	*from 6m onwards*	*From ..... m*		
16	Open space to be left between two blocks *[vide rule 7.a.xi]* *As per col-4 of table-iv*	*Permissible ___*	*Proposed___*	*Permissible /Not permissible*	

17	**Lighting & Ventilation *[vide rule 7.a.iv]***		
18	Whether the lighting and ventilation of a building is through the means of a chowk or inner courtyard or interior open space/duct	**YES**	NO

		Minimum Duct area (sq. m)			Minimum Side Length (m)		
19	If Yes, give details	**Required**	**Proposed**	**Remarks**	**Required**	**Proposed**	**Remarks**
		25 sq. m			**3.0m**		

20	If there are no ducts, whether the lighting & ventilation proposed for all the rooms in the building is satisfying the rules	**YES**	NO	

		Required	Provided	Remarks
21	Ventilation to parking floors	**2.5 % of each floor**		

22	Exclusive Fire escape staircase & lift are provided *[vide rule 15.b.i]*	**YES**	NO	Remarks

B	**TOWER AND PODIUM TYPE HIGH RISE STRUCTURE UPTO 50 M** *[vide rule 7.b]* ***[THE ABOVE INFORMATION EXCEPT SET BACK REQUIREMENTS IN 'A' SHALL BE FILLED UP]***				
			Required	**Provided**	Remarks
1	*For Podium block*	*Ground plus first floor all-round setbacks (in m)*	*7*		
2	*For the Tower block*	*Coverage*	*Minimum 50 % of the Podium Block*		
		All-round setbacks	*At least 3m from the Podium edge on all sides*		
3	*Whether the fire safety and fire escape measures for the Tower Block independent of the Podium Block are provided*	*YES*	*NO*	REMARKS:	

C	**"STEPPED TYPE" OR "PYRAMIDAL TYPE" HIGH RISE STRUCTURE** *[vide rule 7.c]* Such type of high rise building blocks may be allowed for heights above 30 m ***[THE ABOVE INFORMATION EXCEPT SET BACK REQUIREMENTS IN 'A' SHALL BE FILLED UP]***				
1	**At Ground Level**	*Minimum all round open space for the first five floors*	**9m.**		
2	**At Upper Floors**	**Increase of 1m all round open spaces or more for every 5 upper floors or 15 m height or part thereof over and above the ground level open space of minimum 9m**			

D	**GROUP DEVELOPMENT SCHEMES** *[vide rule 8]* *'Group Development Scheme' is reckoned as development of Residential Buildings in a Campus or Site of 4000sq.m and above in area and could be row houses, semi-detached, detached Houses, Apartment blocks or high-rise buildings or mix or combination of the above.*			
		Required	Proposed	Remarks
1	Site area (m^2)	4000		
2	Minimum abutting road width (m)(black topped)	12		
3	Provisional plans of a Services and Utilities Plan, Landscaping Plan, Parking & Internal Circulation Plans Submitted [vide rule 8.e]	YES		NO

3					12		
4	ORGANISED OPEN SPACE						
a	*Permissible*		*Proposed*		*Satisfied*	*Not Satisfied*	*Remarks*
	%	*in sq. m.*	*%*	*in sq. m.*			
	10%						
b	*No. of Locations provided*						
c	*Minimum area(m^2)* *(50m^2 with a minimum width of 3 m at each location)*				*Permissible*		*Proposed*
					Area(m^2)	*Width(m)*	*Area(m^2)*	*Width(m)*
					50	*3*		
5	Type of Buildings proposed (Tick appropriate item)						
a	Group Housing	Non High Rise					
		High Rise					
b	Row Housing						
c	Cluster Housing						
6	A thorough public access road of width (m) with 2-lane black-topped is proposed on any one side at the periphery. ***[vide rule 8.k.]***				Required	Proposed	Remarks
					12		
7	Common amenities & facilities like shopping center, community hall or center / club house etc. in case where the units are above 100. *[vide rule 15.a.x]*				**3 % of the built up area**		
8	In case of Row Housing & Cluster Housing Projects of more than 5 ac Common amenities & facilities like shopping center, community hall or center / club house [vide rule 9.o & 10.i]				5 % of the site area		
E	**ROW TYPE HOUSING / ROW TYPE SHOPPING PRECINCTS** *[vide rule 9]*						
					Required	Provided	**Remarks**
1	**Minimum site area (sq. m)**				**1000**		
2	**Minimum size of individual plot / Row shops (sq. m)**				**50**		
3	**No. of plots in a Row Housing**				**8**		
4	**Separation between two blocks (m)**				**6.0**		
5	**Minimum width of internal roads(m)**				**9.0**		
6	**Width of Internal cul-de-sac road with maximum length of 50m (m)**				**6.0**		
7	**Minimum open space area**				**10% of total area**		
8	**Height of the building for plot up to 125 sq. m**				**2 floors Or 6m**		
9	**Height of the building for plot above 125 sq. m**				**G+2 floors**		
10	Setbacks (m) (The setbacks in a row can be interchangeable)				Required	Provided	**Remarks**
a	Front				**3**		
b	Rear				**1.5**		
c	In case of row type shopping precincts, back to back shops front setback of 3m is allowed.						
11	**In case of projects more than 5 acres common amenities & facilities are required to be provided with 5% of the Site Area.** ***[vide rule 9.o.]***						
12	**Parking Area (sq. m)**						
F	**CLUSTER HOUSING** *[vide rule 10]*						
					Required	Provided	**Remarks**
1	**Minimum site area (sq. m)**				**1000**		

2	**Minimum size of plot (sq. m)**	**25**		
3	**Maximum no. of Houses in cluster**	**20**		
4	**Minimum size of cluster open space(sq. m)**	**36**		
5	**Minimum width of cluster open space(m)**	**6**		
6	**Height of the building (m)**	**2 floors or 6m**		
7	**Minimum access road in (m)**	**9**		
8	Internal access (m)	**6**		
9	Minimum space between two clusters (m)	6		
10	Setbacks shall be as per building line as per Table III			
a	**Front**			
b	**Rear**			
c	**Side 1**			
d	**Side 2**			
11	**In case of projects more than 5 acres common amenities & facilities are required to be provided with 5% of the Site Area.** ***[vide rule 10(i)]***			
G	BUILDINGS WITH CENTRAL COURT-YARD ***[vide rule 12]***			

	Setback (m)	Required	Provided	**Remarks**
1	*Front*			
2	*Rear*			
3	*S1*			
4	*S2*			
5	**Area so saved which is transferred in the Central Court-yard (sq. m)**			
6	**Depth of Court yard which shall be at least 50% of the proposed 'U' type building depth (m)**			

PART VI	**PROVISION FOR EWS / LIG CATEGORY(Rule 11)**		
1	Site (m^2)		
2	Whether EWS / LIG need to be provided	YES	NO
3	IF Yes, developed area reserved for EWS/LIG (m^2)	Required	Provided

PART VII	**OTHER DOCUMENTS TO BE SUBMITTED**			
A	**COMPLIANCE BY OWNER FOR ENSURING CONSTRUCTION IS UNDERTAKEN AS PER SANCTIONED PLAN** *[vide rule 25]*			
1	Whether Affidavit/Declaration duly Notarised is submitted [*vide rule 25.a]*	**YES**	**NO**	
		Remarks		
2	**Floor or 10% of the total built-up area proposed to be handed over** ***[vide rule 25.d]***	Required	Proposed	Remarks
	Ground floor			
	First floor			
	Second floor			
3	In respect of gated development schemes like row houses / independent houses / cluster housing 5% of the units shall be handed over to sanctioning authority. *[vide rule 25.(d)]*	Required No. of units	Proposed No. of units	Remarks
4	Whether the Notarized Affidavit submitted*[vide rule 25.(d)]*	**YES**	**NO**	

PART VIII	FEE INFORMATION		
S. No.	**Category**	**Statutory Provision**	**Amount (Rs.)**
1	**INITIAL FEES**	(2 % of Building Permit / License fees subject to a maximum of Rs.10, 000 shall be paid along with the building application. *No fees and charges would be levied for parking spaces provided in any floor.)* *[vide rule 19 (a)]*	
2			
3			
4			
5			
6			
7			
8			
9			
10			
11			
12			
13			
14			
		GRAND TOTAL	
	Rupees		

PART IX	DECLARATION

I/ we declare that I am / we are the absolute/ owner/ owners/ lessee of the land on which I/we intend to erect the Building and am / are enclosing copies of relevant document of ownership/ lease certified by Magistrate/ Notary public/ a Gazetted Officer authorized by the Commissioner in this behalf.

I/ we have gone through the Building Regulations made under the provisions of the A.P. Building Rules-2012 and have satisfied myself/ ourselves that the site and building plans are in accordance with provisions contained therein.

Sl.No.	**Name of Owner / Developer / License Technical Personnel**	**Signature**
1	..... Owner / Owners / Lessee / Authorised Agent	
2	..... Builder / Developer	
3		

	..... Architect/ Engineer/ Surveyor	
4	..... Structural Engineer	

PART X	REMARKS OF THE SCRUTINY OFFICER REGARDING SITE CONDITIONS / LAYOUT RULES / BUILDING BYE-LAWS / POLICIES / PLANS ETC. & GIST OF THE PROPOSALS. *(OFFICE USE)*
1	PROPOSALS ARE RECOMMENDED FOR APPROVAL WITH CONDITIONS / REJECTION FOR REASONS/ RETURN FOR RESUBMISSION WITH PARTICULARS.